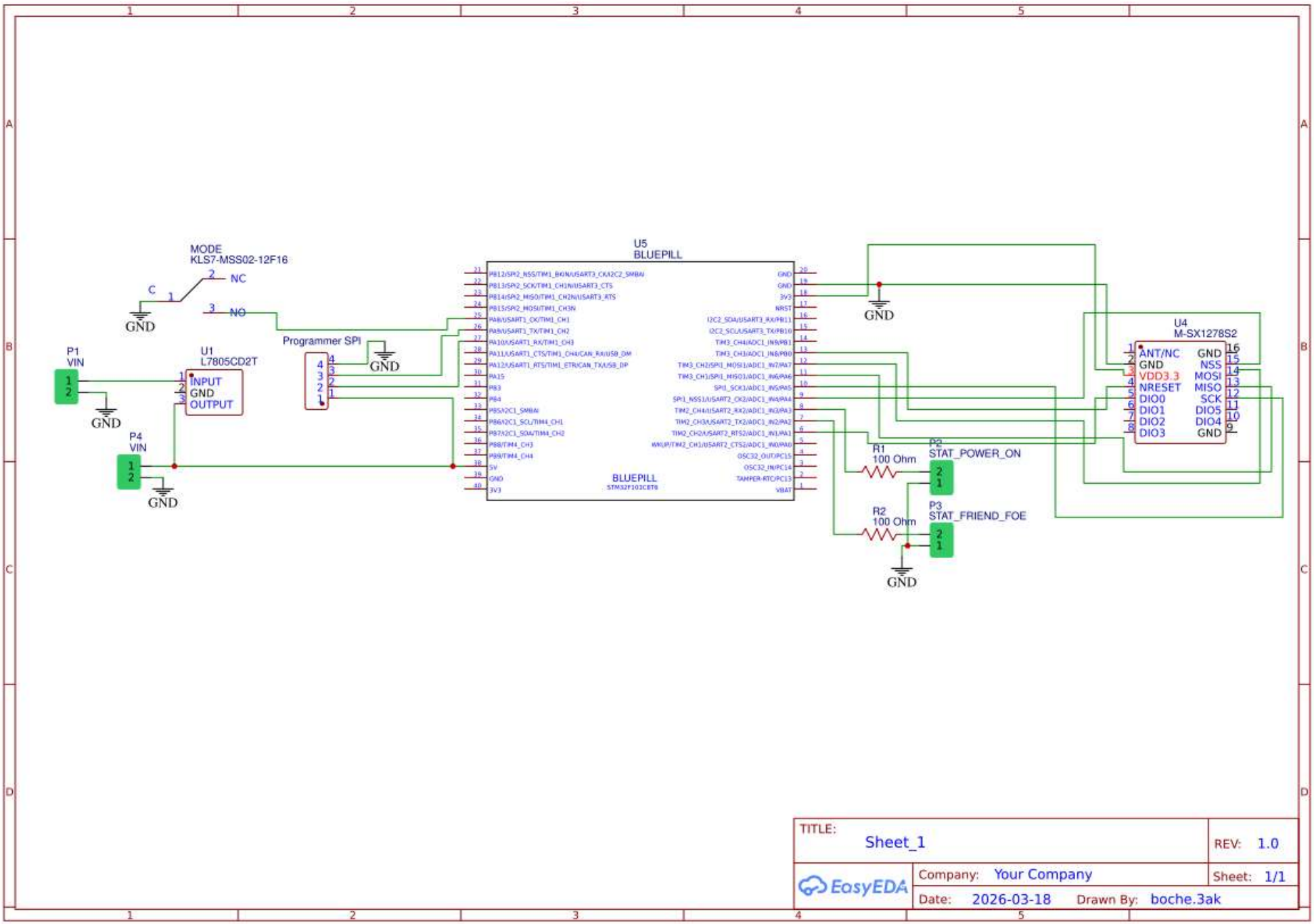
MODE
KLS7-MSS02-12F16
C
NC
NO
GND
P1
VIN
U1
L7805CD2T
INPUT
GND
OUTPUT
P4
VIN
Programmer SPI
U5
BLUEPILL
BLUEPILL
STM32F103C8T6
PB12/SPI2_NSS/TIM1_BKIN/USART3_CK/I2C2_SMBAI
PB13/SPI2_SCK/TIM1_CH1N/USART3_CTS
PB14/SPI2_MISO/TIM1_CH2N/USART3_RTS
PB15/SPI2_MOSI/TIM1_CH3N
PA8/USART1_CK/TIM1_CH1
PA9/USART1_TX/TIM1_CH2
PA10/USART1_RX/TIM1_CH3
PA11/USART1_CTS/TIM1_CH4/CAN_RX/USB_DM
PA12/USART1_RTS/TIM1_ETR/CAN_TX/USB_DP
PA15
PB3
PB4
PB5/I2C1_SMBAI
PB6/I2C1_SCL/TIM4_CH1
PB7/I2C1_SDA/TIM4_CH2
PB8/TIM4_CH3
PB9/TIM4_CH4
5V
GND
3V3
GND
GND
3V3
NRST
I2C2_SDA/USART3_RX/PB11
I2C2_SCL/USART3_TX/PB10
TIM3_CH4/ADC1_IN9/PB1
TIM3_CH3/ADC1_IN8/PB0
TIM3_CH2/SPI1_MOSI1/ADC1_IN7/PA7
TIM3_CH1/SPI1_MISO1/ADC1_IN6/PA6
SPI1_SCK1/ADC1_IN5/PA5
SPI1_NSS1/USART2_CK2/ADC1_IN4/PA4
TIM2_CH4/USART2_RX2/ADC1_IN3/PA3
TIM2_CH3/USART2_TX2/ADC1_IN2/PA2
TIM2_CH2/USART2_RTS2/ADC1_IN1/PA1
WKUP/TIM2_CH1/USART2_CTS2/ADC1_IN0/PA0
OSC32_OUT/PC15
OSC32_IN/PC14
TAMPER-RTC/PC13
VBAT
U4
M-SX1278S2
ANT/NC
GND
VDD3.3
NRESET
DIO0
DIO1
DIO2
DIO3
GND
NSS
MOSI
MISO
SCK
DIO5
DIO4
GND
R1
100 Ohm
R2
100 Ohm
P2
STAT_POWER_ON
P3
STAT_FRIEND_FOE
TITLE:
Sheet_1
REV: 1.0
EasyEDA
Company: Your Company
Sheet: 1/1
Date: 2026-03-18
Drawn By: boche.3ak