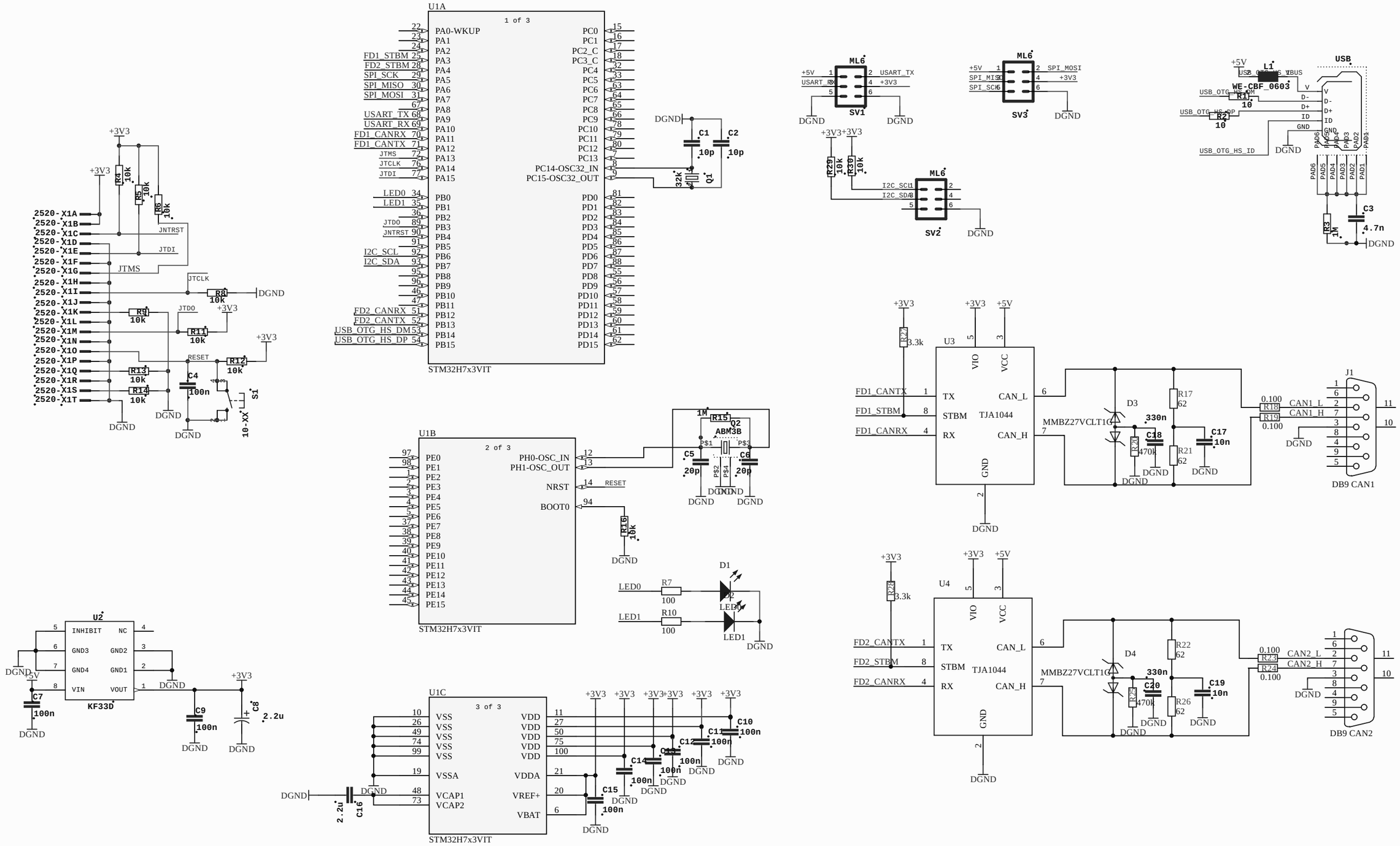

	powersupply_grid8.sch
	12/19/2018 10:57:12 PM
	Sheet: 2

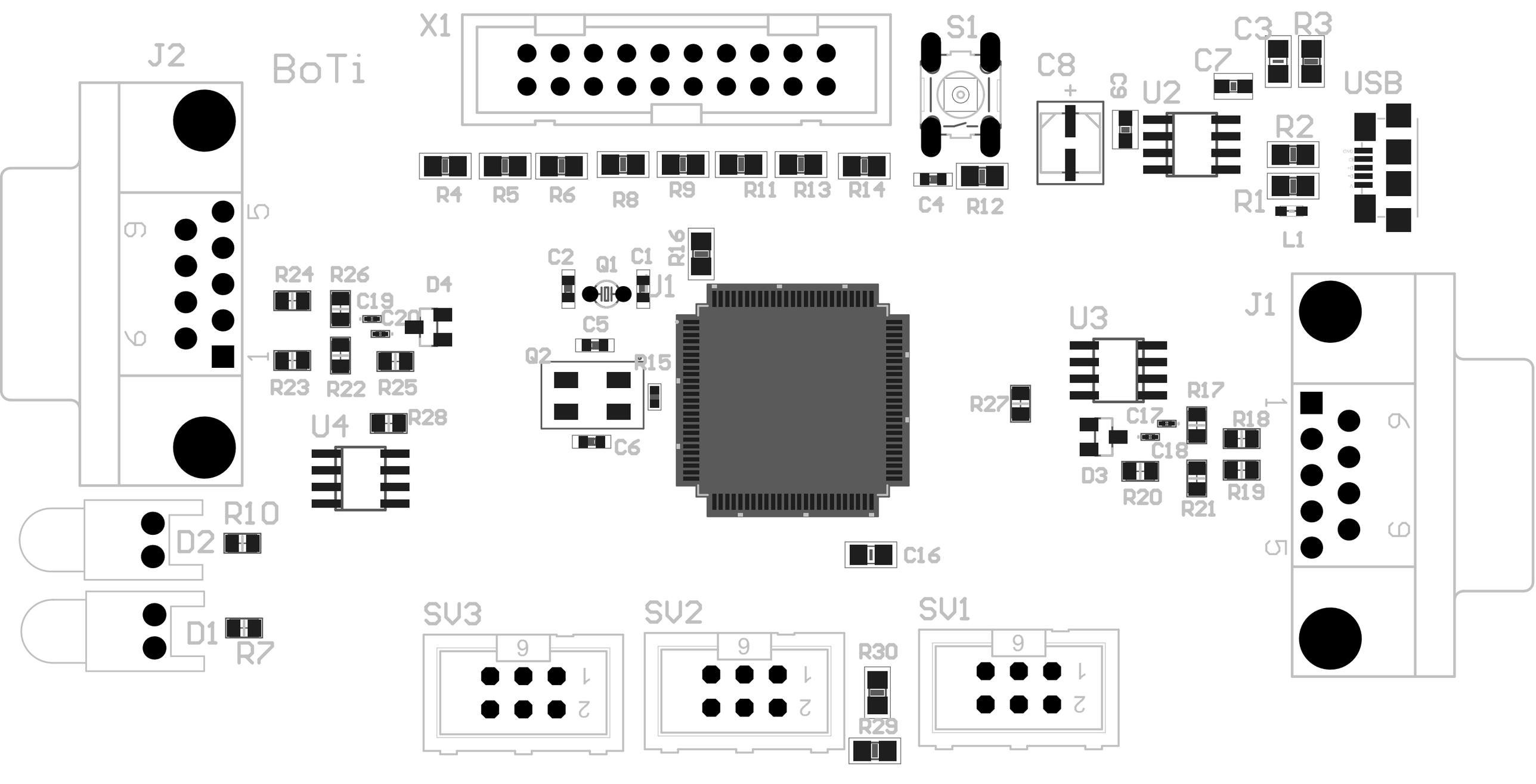
BoTi
X1
J2
S1
C8
C9
U2
C7
C3
R3
USB
R2
R1
L1
R4
R5
R6
R8
R9
R11
R13
R14
C4
R12
R16
C2
Q1
C1
J1
C5
Q2
R15
C6
R24
R26
C19
C20
D4
R23
R22
R25
U4
R28
R27
U3
R17
C17
R18
C18
D3
R20
R21
R19
C16
J1
R10
D2
D1
R7
SV3
SV2
SV1
R30
R29

C15
C12
C13
C10
C14
C11