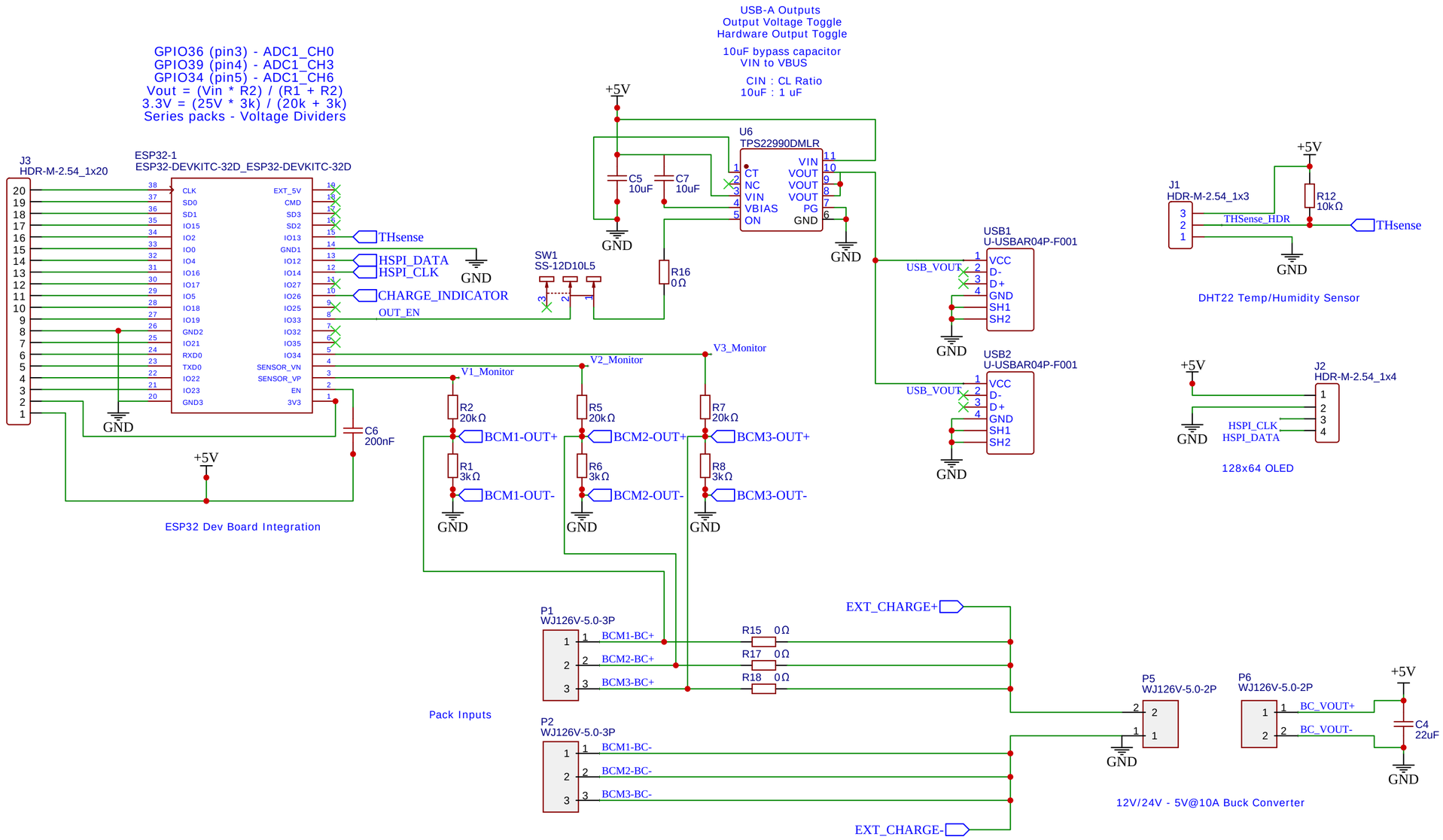

DHT22 Temp/Humidity:
https://www.digikey.com/en/products/detail/gearbox-labs/PART-DHT22/16160146
IRF540NPBF MOSFET for switching voltage lines (21V@2A):
https://www.digikey.com/en/products/detail/infineon-technologies/IRF540NPBF/811869
*1) 204-10SYGD/S530-E3
https://lindevs.com/dual-led-flasher-using-555-timer
https://www.lcsc.com/product-detail/Chip-Resistor-Surface-Mount_UNI-ROYAL-Uniroyal-Elec-0805W8F2002T5E_C4328.html
https://www.lcsc.com/product-detail/Chip-Resistor-Surface-Mount_UNI-ROYAL-Uniroyal-Elec-0805W8F3001T5E_C17661.html

TITLE: Recycled Vape Battery Pack -ESDII	REV: 5.0
Company: WIT 2023	Sheet: 1/2
Date: 2023-07-08 Drawn By: Sam Bogonis	

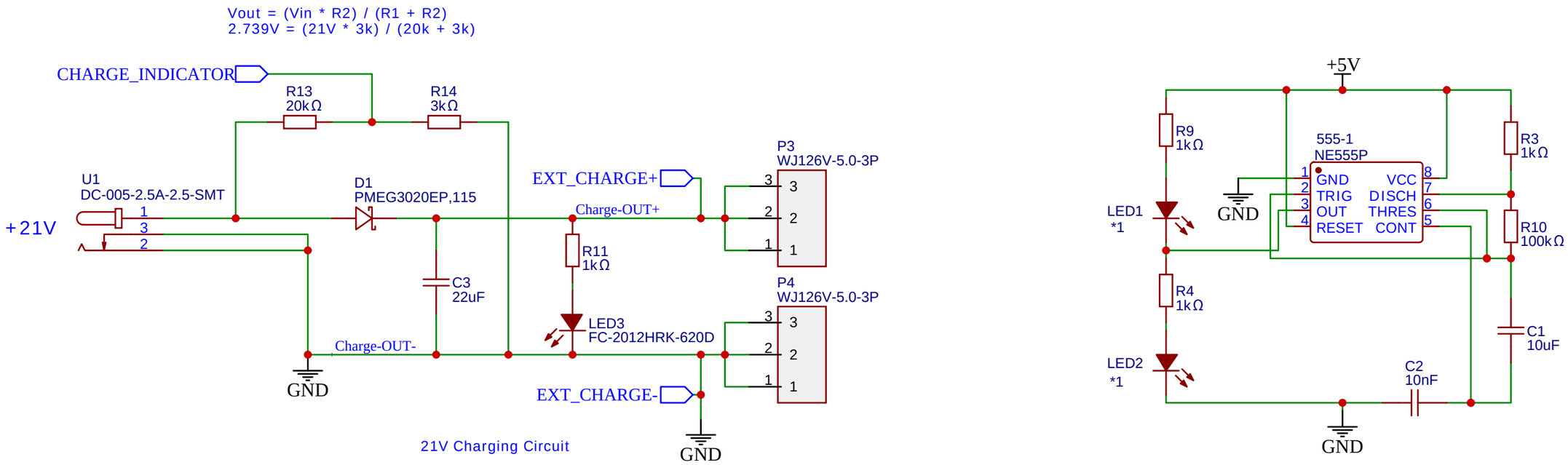

TITLE: Recycled Vape Battery Pack - ESDII		REV: 5.0
	Company: WIT 2023	Sheet: 1/1
	Date: 2023-07-08 Drawn By: Sam Bogonis	