HWRS 561b: Physical Hydrogeology II

Inverse modeling

Agenda:

Parameter estimation and inverse modeling

Pressure Cell Method: SWC

Sometimes also referred to as the **Tempe cell method**

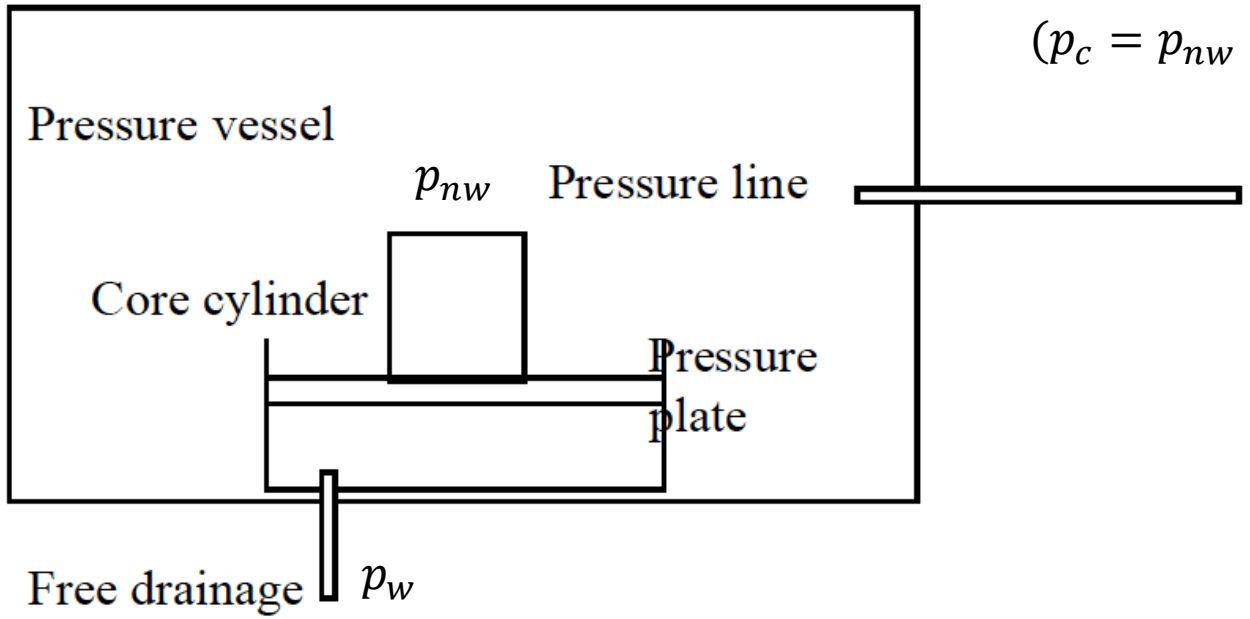

$(p_c = p_{nw} - p_w)$

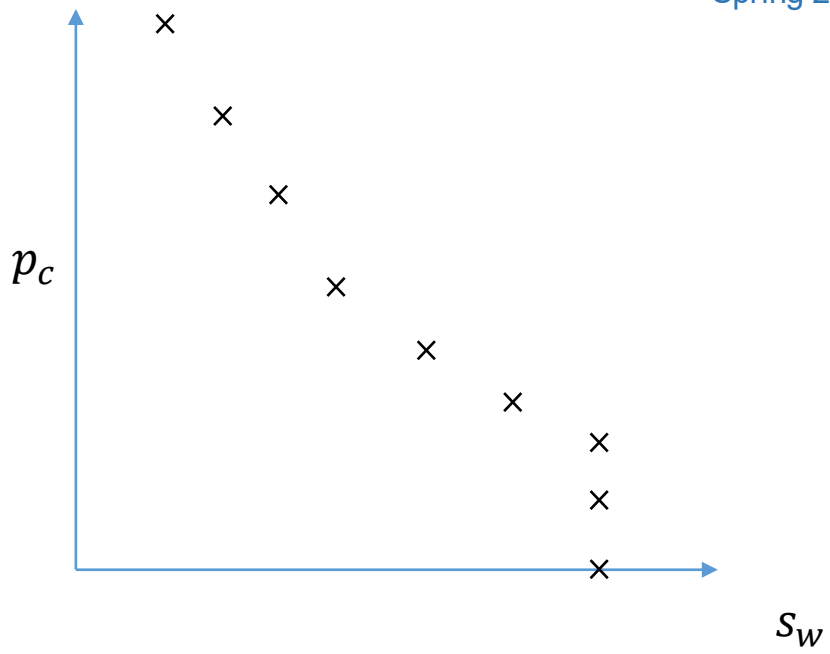

1. Increase p_{nw} step by step. At each step, wait until equilibrium, obtain one data point. Then start the next step.
2. The time-scale to reach equilibrium will increase as $s_w \downarrow$
3. Once the bubbling pressure (air entry pressure) of the plate is reached. No pressure increase can be applied.
4. At the end of the sequence of pressure increments, the final water content is measured by oven-drying.

Constant Head Permeameter: Ksat

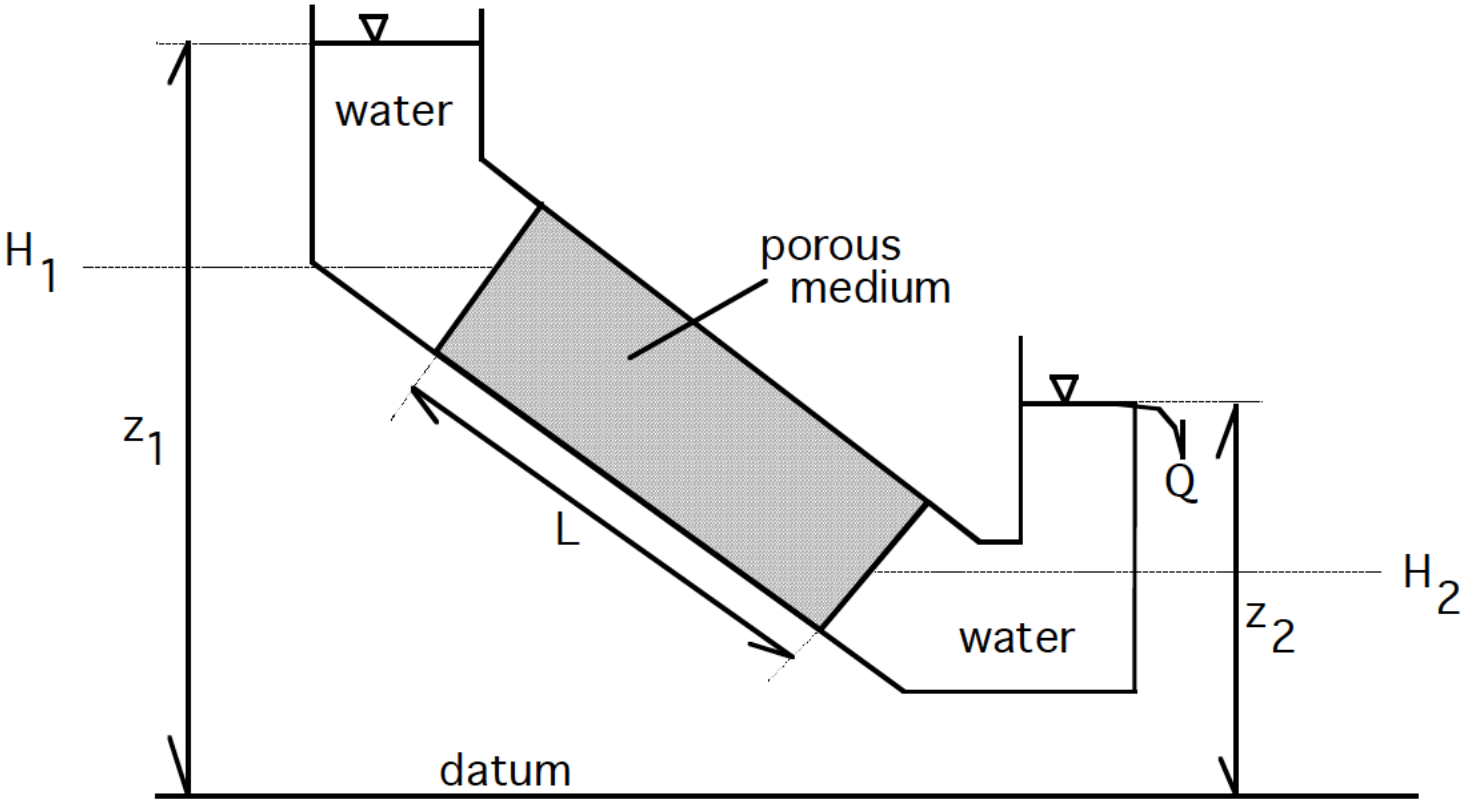

$$Q = -K_{sat} A \frac{H_2 - H_1}{L}$$

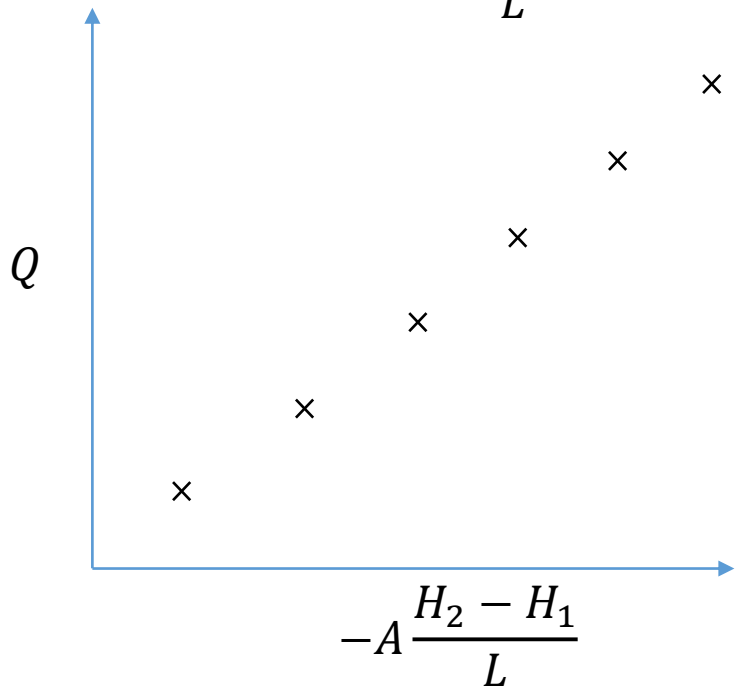

Note: commonly used for $K_{sat} > 10^{-5}$ cm/s

Falling Head Permeameter: Ksat

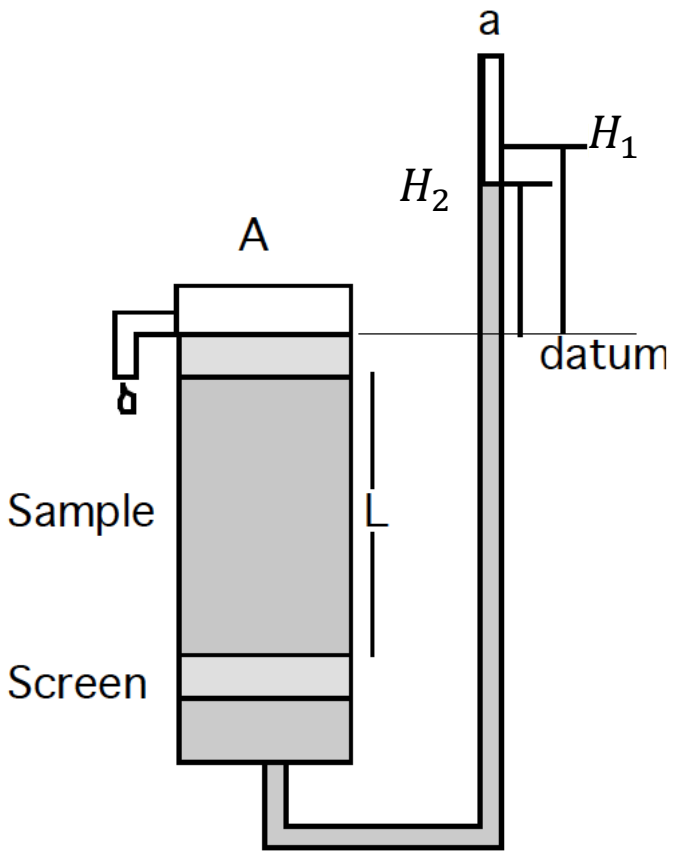

$$-K_{sat}A\frac{H}{L}\mathrm{d}t = a\,\mathrm{d}H$$

$$\Rightarrow -\frac{K_{sat}A}{aL}\mathrm{d}t = \frac{1}{H}\,\mathrm{d}H$$

$$\Rightarrow -\frac{K_{sat}A}{aL}\Delta t = \ln H_2 - \ln H_1$$

$$\Rightarrow -K_{sat} = \frac{aL}{A\Delta t}\ln\frac{H_2}{H_1}$$

Note: commonly used for 10^{-3} cm/s $> K_{sat} > 10^{-7}$ cm/s

Steady State Flux Method: K(θ) or K(h)

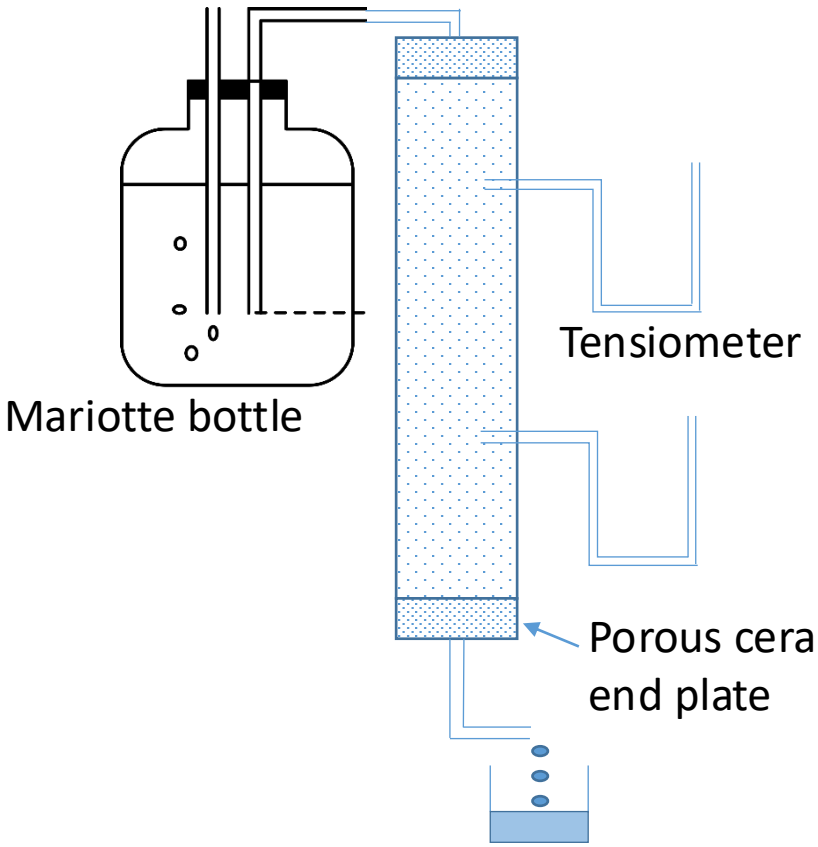

1. Apply the same negative pressure at top and bottom.
2. A large number of steady-state conditions are needed to obtain $K(\theta)$ curve.

$$\frac{\partial \theta}{\partial t} = 0 \qquad \frac{\partial \theta}{\partial z} = 0$$

$$q = -K(\theta)\left(\cancelto{0}{\frac{\partial h}{\partial z}} + 1\right) \Rightarrow q = -K(\theta)$$

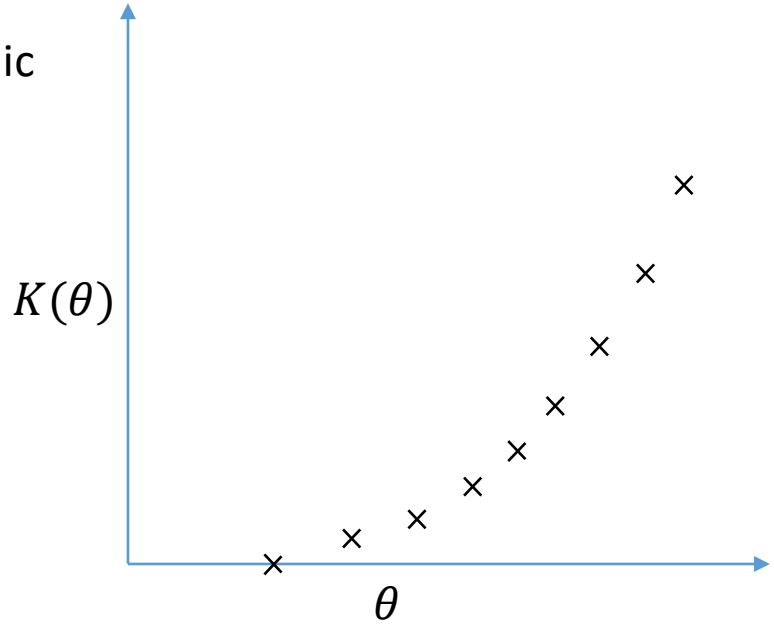

Instantaneous Profile Method: K(θ) or K(h)

It is a <u>transient</u> method

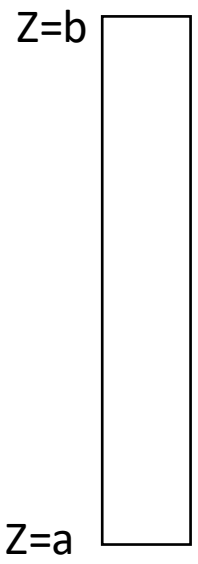

$$q_{a,t} = q_{b,t} - \frac{1}{\Delta t}\int_b^a \Delta\theta \, \mathrm{d}z$$

$$q_{a,t} = -K(h)\frac{\partial H}{\partial z}\Big|_{z=a}$$

If $q_{b,t} - \frac{1}{\Delta t}\int_b^a \Delta\theta \, \mathrm{d}z$ and $\frac{\partial H}{\partial z}|_{z=a}$ known, we can compute $K(h)$.

Often design the experiments so that $q_{b,t}$ is known.

Can be estimated from measured θ at different locations.

Can be obtained by measuring the h at two locations nears $z = a$.

Field Methods: Neutron Probes

- Based on the amount of thermalized neutron at the detector
- Nondestructive and can go to deep locations
- Need to calibrate for the soil type and measurement conditions
- Measures soil moisture

https://soilsensor.com/articles/neutron-probe/

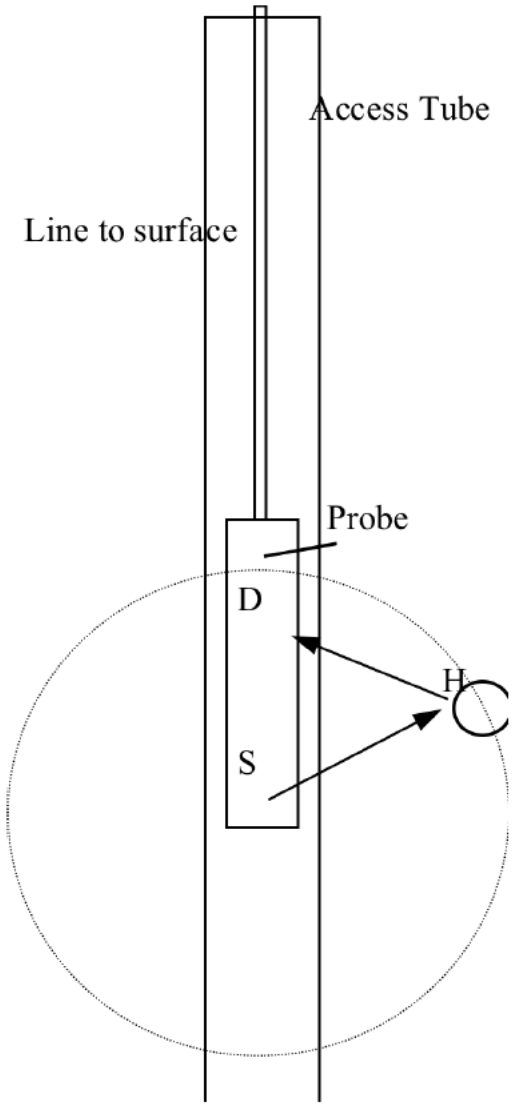

Field Methods: Time Domain Reflectometry

- Based on dielectric permittivity and electrical conductivity
- Nondestructive
- Measures soil moisture

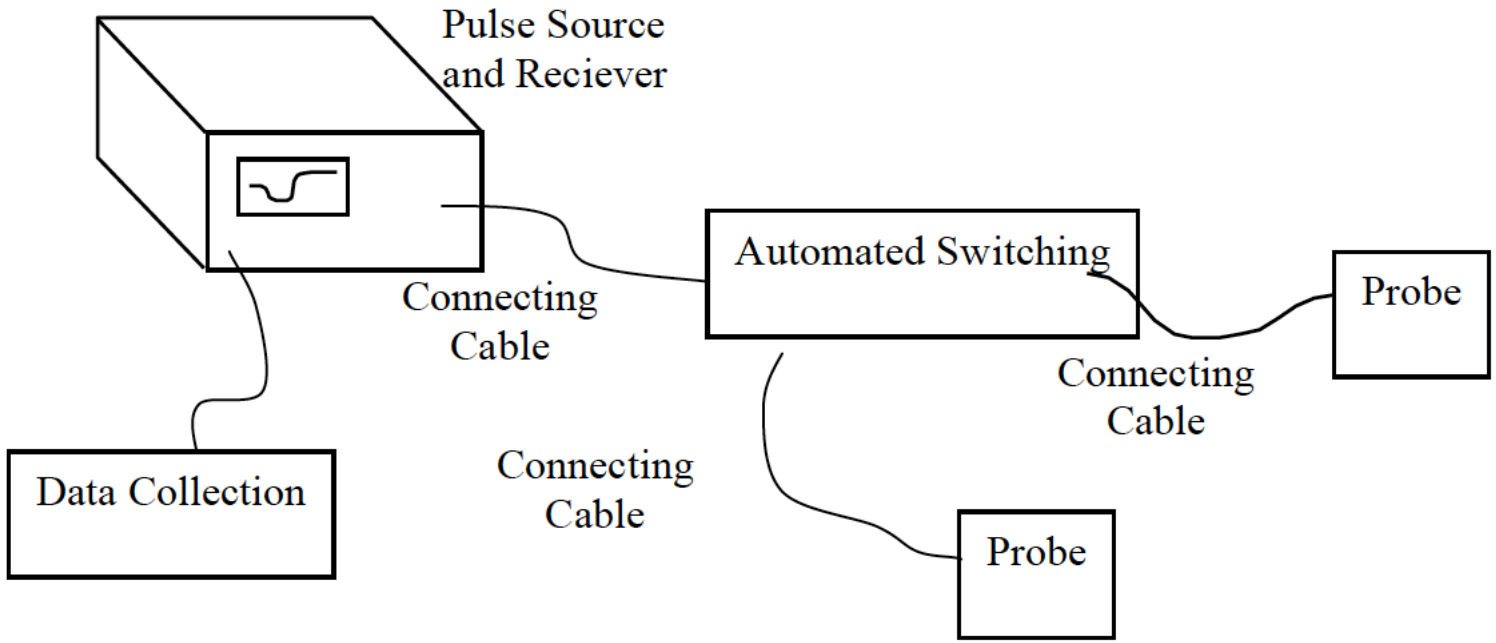

Maja Krzic, University of British Columbia

Field Methods: Tensiometer

- Based on pressure equilibrium
- Nondestructive
- Measures water pressure head

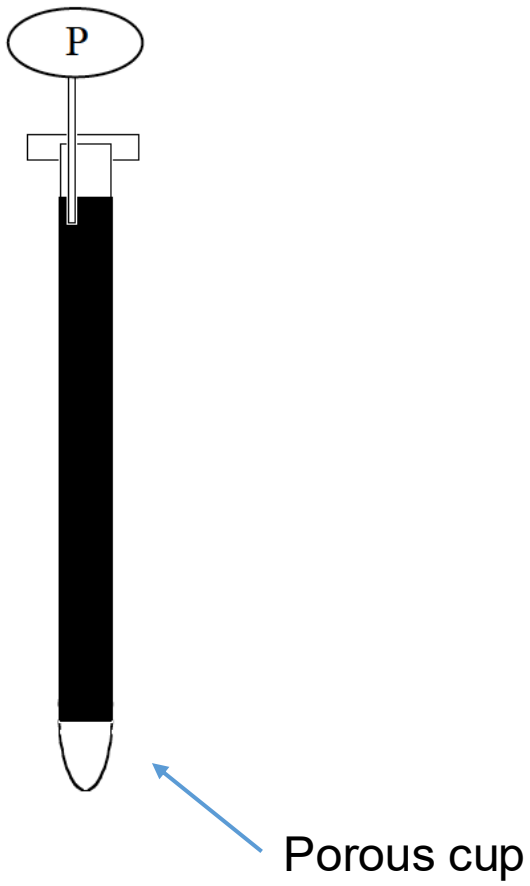

Instantaneous Profile Method Applied to the Field

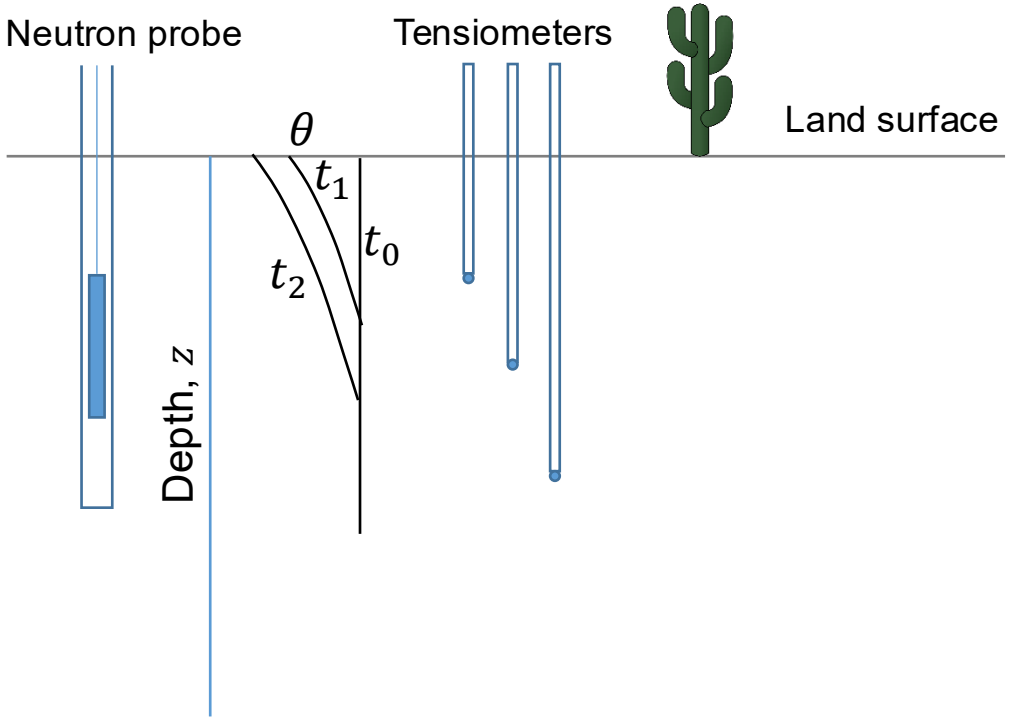

1. Saturate the vadose zone
2. Cover the surface to stop evaporation
3. Monitor as the soil drains

At any location, $z = -L$, below the land surface

$$q = \int_0^{-L} \partial\theta/\partial t \, \mathrm{d}z$$

$$q = -K(\bar{\theta})\Big|_{z=-L} \frac{\mathrm{d}H}{\mathrm{d}z}\Big|_{z=-L}$$

$$K(\bar{\theta})\Big|_{z=-L} = -\frac{\int_0^{-L} \frac{\partial\theta}{\partial t}\mathrm{d}z}{\frac{\mathrm{d}H}{\mathrm{d}z}\Big|_{z=-L}}$$

Inverse Modeling

Forward modeling

Known parameters → Process-based model → Predicted data

Examples:

- Use Richards' equation to predict water saturation and water pressure head.

Inverse modeling

Unknown parameters ← Process-based model ← Measured data

Examples:

- All of the measurement methods discussed.

Inverse Modeling with One Parameter

Classical Parameter estimation

Single-objective optimization

Goal: searching through parameter space to find *the parameter* that gives the best predictions.

$$Error\ (\theta) = (l_1^2 + l_2^2 + l_3^2 + \ldots)^{1/2}$$

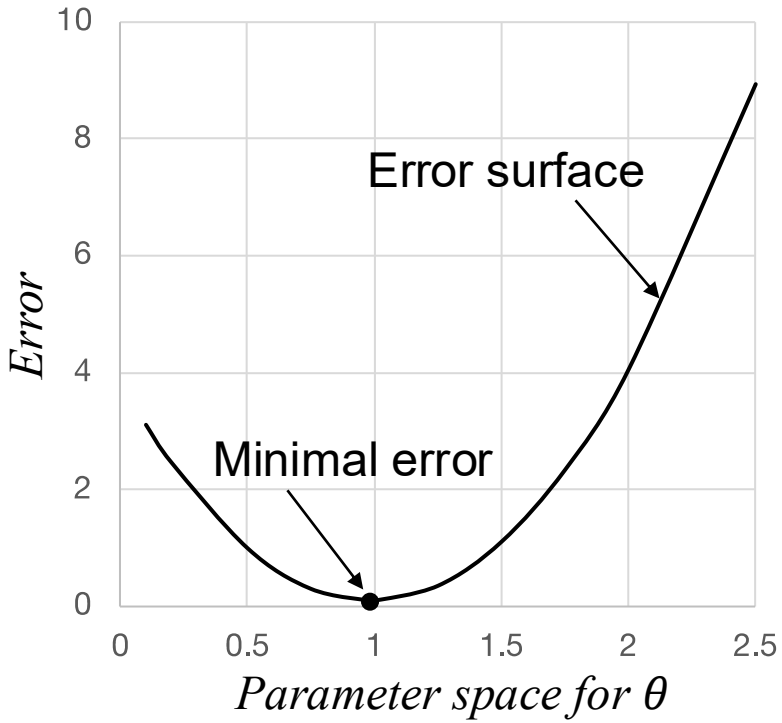

Complications:

- Measurement errors
- Calibration errors
- Scaling errors
- Determine a single error surface for multiple measurements

Inverse Modeling with Multiple Parameters

Classical Parameter estimation

Single-objective optimization

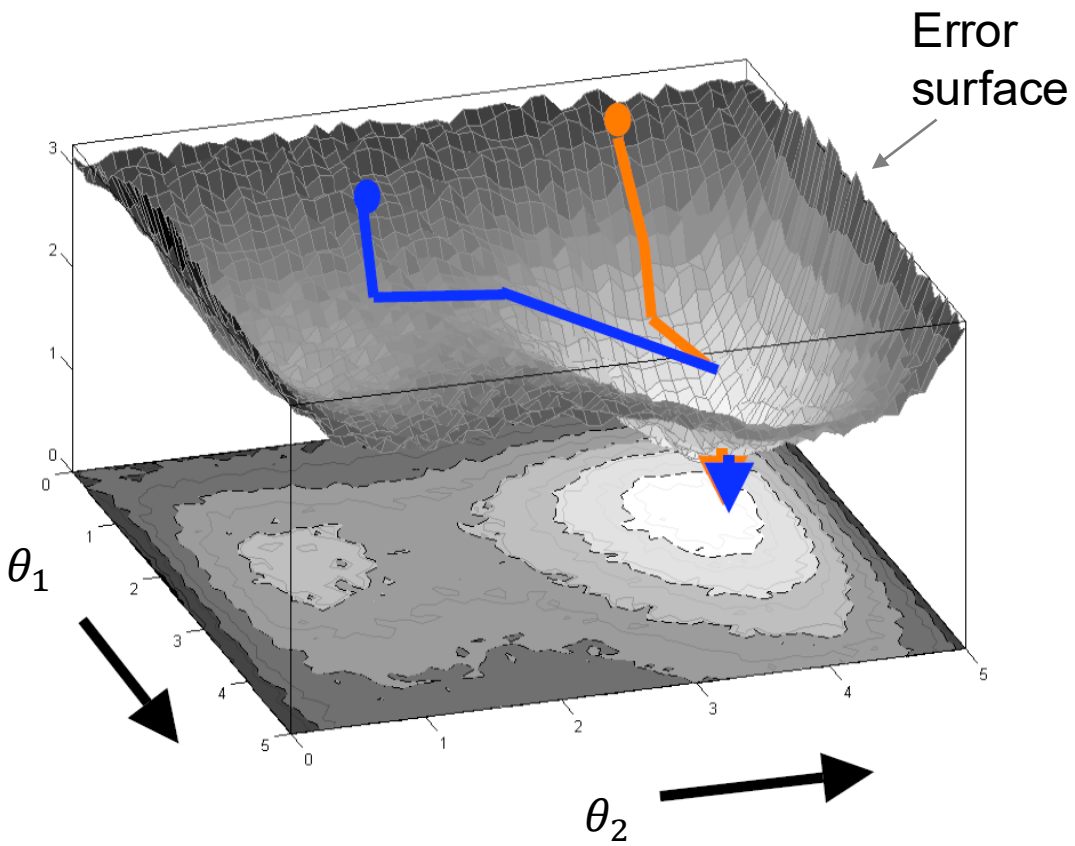

Goal: searching through parameter space to find the *parameter set* that gives the best predictions.

Complications:

- Measurement errors
- Calibration errors
- Scaling errors
- Determine a single error surface for multiple measurements