HWRS 561b: Physical Hydrogeology II

Transient 1D unsat flow (Part 2)

Agenda: Simplified models for 1D transient unsaturated flow
Reading: Jury & Horton, Soil physics, Chapters 3 & 4; Pinder & Celia, Chapter 11

Review

Examples of 1D transient flow

- Two forces that drive water flow: capillary pressure and gravity
- The importance of initial and boundary conditions
- How do soil properties influence unsaturated water flow?
  - ✓ Soil water characteristics
  - ✓ Unsaturated hydraulic conductivity

Infiltration models

Green–Ampt model (1911): vertical infiltration

Pinder & Celia, 2006

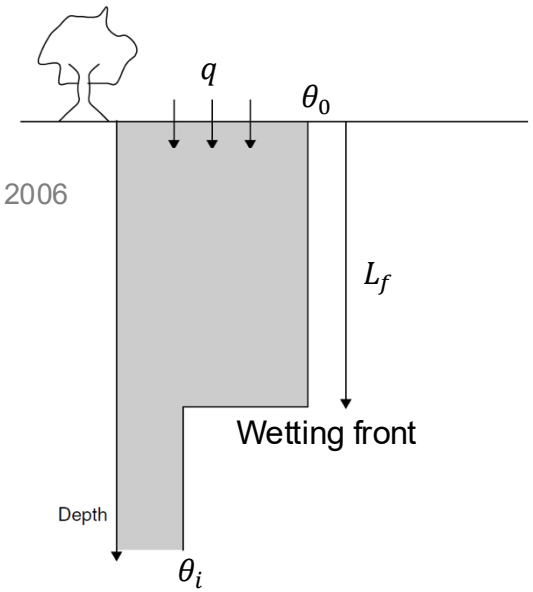

FIGURE 11.12. Schematic of saturation profile associated with Green–Ampt solution for infiltration.

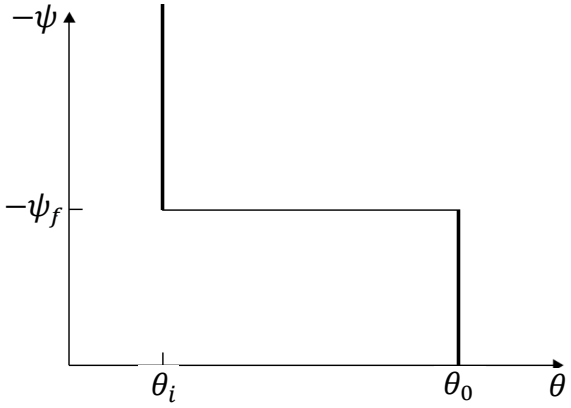

FIGURE 11.13. Plot of idealized relationship between capillary pressure head and moisture content, corresponding to the Green–Ampt formulation. The discontinuity in the curve at $\psi - \psi_f$ leads to the Dirac delta behavior.

Assumptions:

1) 1D homogeneous domain
2) The soil in the wetted region has a uniform water content
3) The matric potential head at the moving front is constant and equal to ψ_f

Darcy's Law:

$$q = -K(\theta_0)\left(\frac{\psi_f - \psi_0}{L_f} - 1\right) = K(\theta_0)\frac{\psi_0 - \psi_f + L_f}{L_f}$$

Mass balance:

$$(\theta_0 - \theta_i)dL_f = qdt$$

$$\Rightarrow (\theta_0 - \theta_i)dL_f = K(\theta_0)\frac{\psi_0 - \psi_f + L_f}{L_f}dt$$

$$\Rightarrow \frac{L_f}{\psi_0 - \psi_f + L_f}dL_f = \frac{K(\theta_0)}{\theta_0 - \theta_i}dt$$

$$\Rightarrow \int_0^t \frac{L_f}{\psi_0 - \psi_f + L_f}dL_f = \int_0^t \frac{K(\theta_0)}{\theta_0 - \theta_i}dt$$

$$\Rightarrow L_f - (\psi_0 - \psi_f)\ln\left(1 + \frac{L_f}{\psi_0 - \psi_f}\right) = \frac{K(\theta_0)}{\theta_0 - \theta_i}t$$

Infiltration models

Green–Ampt model (1911): vertical infiltration

$$L_f - (\psi_0 - \psi_f)\ln\left(1 + \frac{L_f}{\psi_0 - \psi_f}\right) = \frac{K(\theta_0)}{\theta_0 - \theta_i}t$$

Taylor expansion:
$\ln(1+x) = x - \frac{x^2}{2} + \frac{x^3}{3} - \frac{x^4}{4} + \cdots$

Early time: $L_f \ll (\psi_0 - \psi_f)$

$$\ln\left(1 + \frac{L_f}{\psi_0 - \psi_f}\right) \approx \frac{L_f}{\psi_0 - \psi_f} - \frac{1}{2}\left(\frac{L_f}{\psi_0 - \psi_f}\right)^2$$

$$\Rightarrow \frac{1}{2}\frac{L_f^2}{\psi_0 - \psi_f} \approx \frac{K(\theta_0)}{\theta_0 - \theta_i}t$$

$$\boldsymbol{D}(\theta_w) \equiv \frac{k_{rw}\mathbf{K}_{sat}^w}{\mathrm{d}\theta_w/\mathrm{d}\psi_w}$$

Soil moisture diffusivity

$$\Rightarrow L_f^2 \approx 2K(\theta_0)\frac{\psi_0 - \psi_f}{\theta_0 - \theta_i}t$$

$$\widehat{D} \equiv \frac{\psi_0 - \psi_f}{\theta_0 - \theta_i}K(\theta_0)$$

$$\Rightarrow L_f \approx \sqrt{2K(\theta_0)\frac{\psi_0 - \psi_f}{\theta_0 - \theta_i}t} = \sqrt{2\widehat{D}t}$$

$L_f \sim \sqrt{t}$

$$Q = L_f(\theta_0 - \theta_i) \approx (\theta_0 - \theta_i)\sqrt{2\widehat{D}t}$$

$$q = \frac{dL_f}{dt}(\theta_0 - \theta_i) \approx (\theta_0 - \theta_i)\sqrt{\frac{\widehat{D}}{2t}}$$

$q \sim \frac{1}{\sqrt{t}}$

L'Hospital's rule

$$\lim_{x\to c}\frac{f(x)}{g(x)} = \lim_{x\to c}\frac{f'(x)}{g'(x)}$$

$$\lim_{x\to+\infty}\frac{\ln(1+x)}{x} = \lim_{x\to+\infty}\frac{\frac{1}{1+x}}{1} = 0 \Rightarrow x \gg \ln(1+x)$$

Late time: $(\psi_0 - \psi_f)\ln\left(1 + \frac{L_f}{\psi_0 - \psi_f}\right) \ll (\psi_0 - \psi_f)\frac{L_f}{\psi_0 - \psi_f} = L_f$

$$L_f \approx \frac{K(\theta_0)}{\theta_0 - \theta_i}t$$

$L_f \sim t$

$$Q = L_f(\theta_0 - \theta_i) \approx K(\theta)t$$

$$q = \frac{dQ}{dt} \approx K(\theta)$$

$q \sim t^0$

Infiltration models

Green–Ampt model: horizontal infiltration

Because gravity does not play a role, the infiltration flux

$$q = K(\theta_0)\frac{\psi_0 - \psi_f}{L_f}$$

Mass balance:

$$(\theta_0 - \theta_i)dL_f = K(\theta_0)\frac{\psi_0 - \psi_f}{L_f}dt$$

$$\Rightarrow L_f dL_f = K(\theta_0)\frac{\psi_0 - \psi_f}{\theta_0 - \theta_i}dt$$

$$\Rightarrow \frac{L_f^2}{2} = K(\theta_0)\frac{\psi_0 - \psi_f}{\theta_0 - \theta_i}t$$

$$\Rightarrow L_f = \sqrt{2K(\theta_0)\frac{\psi_0 - \psi_f}{\theta_0 - \theta_i}t} = \sqrt{2\widehat{D}t}$$

$L_f \sim \sqrt{t}$

$$Q = L_f(\theta_0 - \theta_i) = (\theta_0 - \theta_i)\sqrt{2\widehat{D}t}$$

$$q = \frac{dL_f}{dt}(\theta_0 - \theta_i) = (\theta_0 - \theta_i)\sqrt{\frac{\widehat{D}}{2t}}$$

$q \sim \frac{1}{\sqrt{t}}$

Horizontal infiltration is the same as the “early-time” solution of the vertical infiltration.

A Practical Example: Transport of Herbicide

A homeowner applies an herbicide to their lawn. They then water their lawn on a regular schedule, applying 1 cm of water per day. How long will it take until the herbicide is below even their deepest rooted plants (1 m)? How long will it take to reach the water table at 10 m depth?

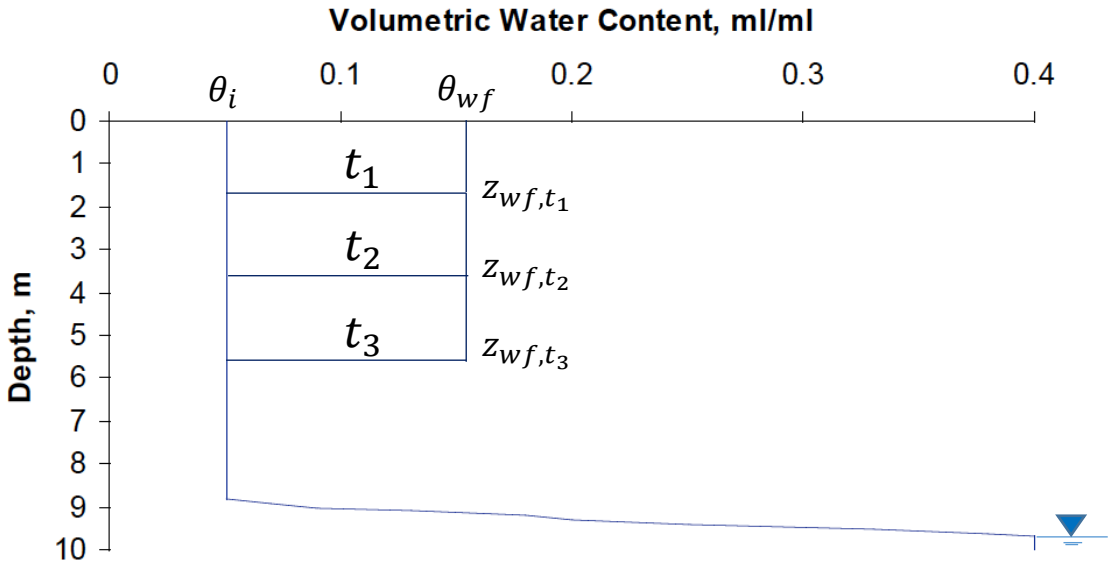

Assumptions:
1) no evapotranspiration;
2) piston-like infiltration;
3) θ_{wf} is constant;
4) infiltration is only driven by gravity;
5) neglect dispersion.

$$qt = z_{wf}(\theta_{wf} - \theta_i)$$

$$\Rightarrow z_{wf} = \frac{qt}{\theta_{wf} - \theta_i}$$

θ_{wf} can be determined from the infiltration rate $q = K(\theta_{wf})$

NOTE: Here, we have employed the "late-time" solution of Green-Ampt.

A Practical Example: Transport of Herbicide

What if our homeowner realized the error of their ways and decided to stop irrigating after 10 days? What would happen to the herbicide? There is still a higher water content region overlying a lower water content region, so the wetting front will continue to move downward. But, the water supplying the wetting front must come from storage above the wetting front. As a result, the water content behind the wetting front decreases with time.

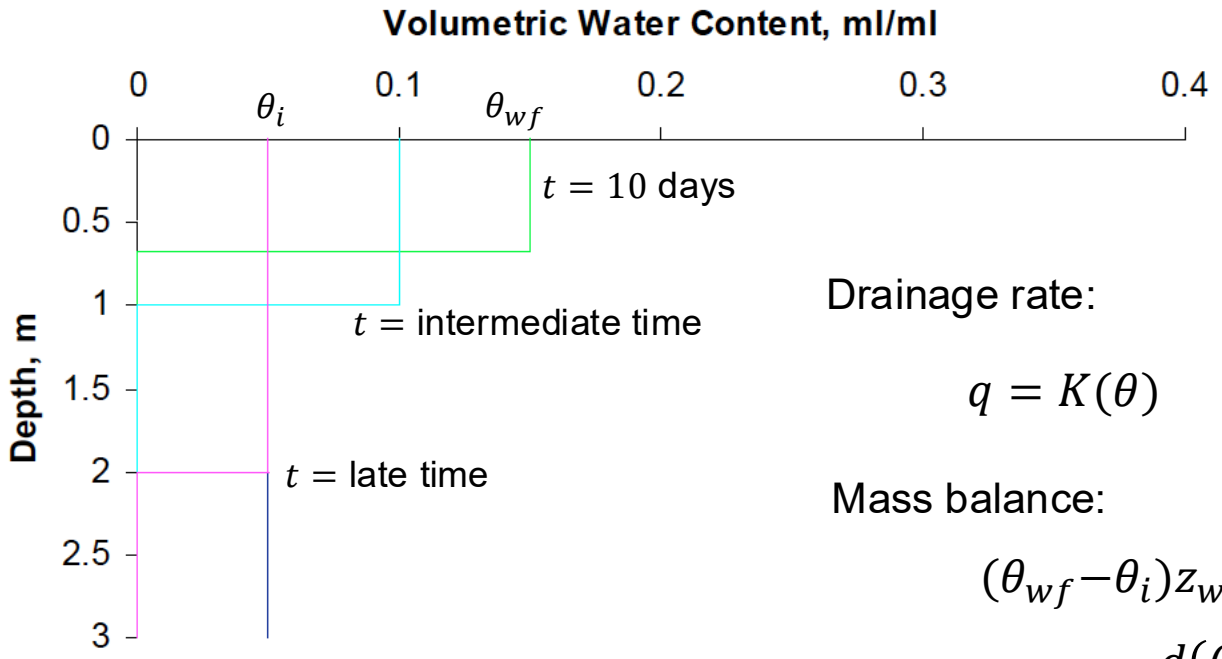

Assumptions:
1) no evapotranspiration;
2) θ remains uniform within the wetting front;
3) drainage is only driven by gravity;
4) neglect dispersion.

Drainage rate:

$$q = K(\theta)$$

Mass balance:

$$(\theta_{wf} - \theta_i) z_{wf} = (\theta(t) - \theta_i) z(t)$$

$$\Rightarrow z(t) \frac{d(\theta(t) - \theta_i)}{dt} = (\theta(t) - \theta_i) \frac{dz(t)}{dt}$$

$$= -\left(q\big(\theta(t)\big) - q(\theta_i)\right) = -\left(K\big(\theta(t)\big) - K(\theta_i)\right)$$

Given $K(\theta)$, we can solve for $\theta(t)$.

Infiltration models

Philip model: vertical infiltration

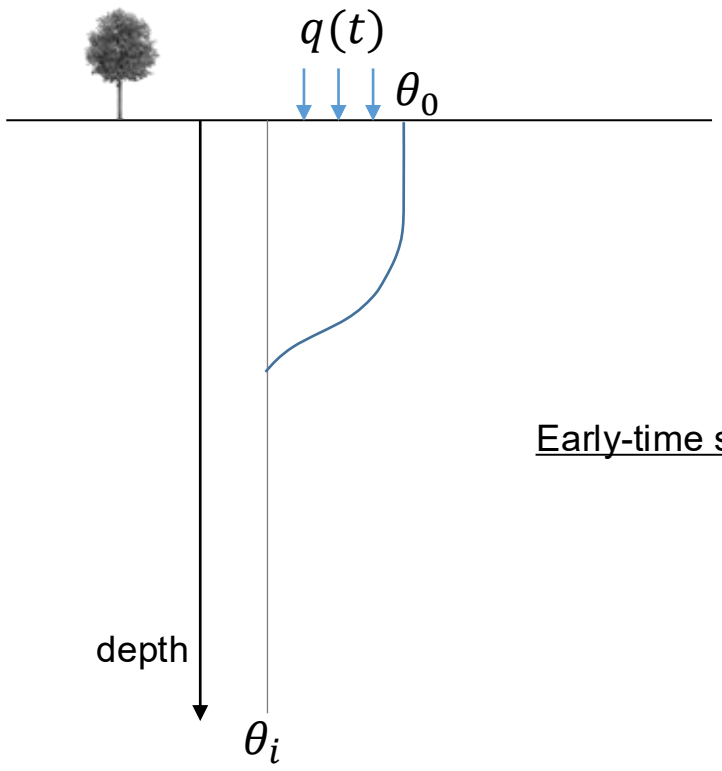

"θ-based" form of Richards' equation

$$\frac{\partial \theta}{\partial t} - \frac{\partial}{\partial z}\left(D\frac{\partial \theta}{\partial z}\right) - \frac{\partial K}{\partial z} = 0$$

Boundary conditions: $\theta(0,t) = \theta_0$
$\theta(-\infty,t) = \theta_i$

Initial condition: $\theta(z,0) = \theta_i$

How is S related to the soil moisture diffusivity?

Terminology

Since S is a measure of the capillary uptake or removal of water, it is essentially a property of the medium with some resemblance to permeability. "Absorptivity" (9) would be a suitable name for S quite comparable to "permeability" or "conductivity." Since, however, a term embracing both absorption and desorption is desired, it is proposed to use the more general "sorptivity." Although this rather extends the meaning of the "sorption" of McBain (8), the extension seems warranted and not ambiguous.

J.R. Philip (1957)

Early-time solution

Cumulative infiltration

$$Q = St^{1/2} + A_1 t + A_2 t^{3/2} + \cdots \approx St^{1/2} + A_1 t$$

- $S = S(\theta_0, \theta_i)$ is sorptivity, $[L/T^{1/2}]$
- The coefficients $A_1, A_2, \ldots$ can be calculated from $D(\theta)$ and $K(\theta)$

Infiltration rate

$$q \approx \frac{1}{2}\frac{S}{\sqrt{t}} + A_1$$

Late-time solution

- The infiltration rate approaches a constant ($q = K(\theta_0)$).
- The wetting front advances without changing its shape.
- The speed of the wetting front approaches a constant ($V_F = \big(K(\theta_0) - K(\theta_i)\big)/(\theta_0 - \theta_i)$)

Infiltration models

Philip model: horizontal infiltration

"θ-based" form of Richards' equation

$$\frac{\partial \theta}{\partial t} - \frac{\partial}{\partial x}\left(D\frac{\partial \theta}{\partial x}\right) = 0$$

Boundary conditions: $\theta(0,t) = \theta_0$
$\theta(-\infty,t) = \theta_i$

Initial condition: $\theta(x,0) = \theta_i$

Cumulative infiltration

$$Q = St^{1/2}$$

$S = S(\theta_0, \theta_i)$ is sorptivity

Infiltration rate

$$q = \frac{1}{2}\frac{S}{\sqrt{t}}$$

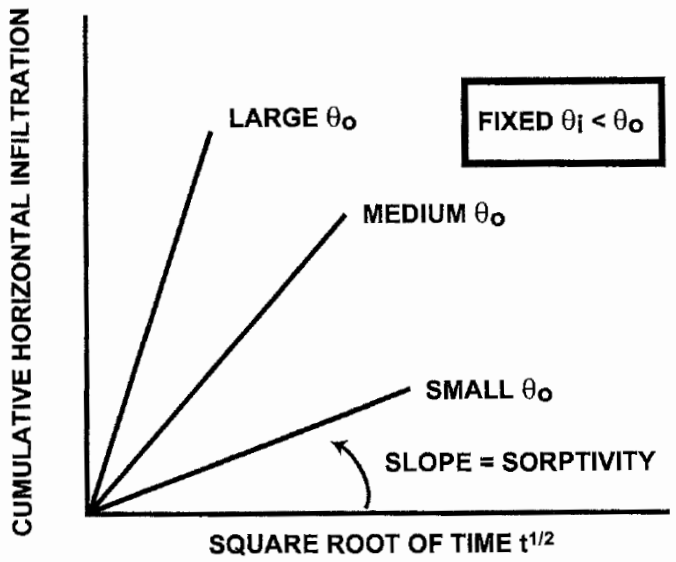

Figure 4.5 Cumulative infiltration into a horizontal soil column at fixed initial water content θ_i and boundary water content θ_0. The slope is equal to the sorptivity as defined in (4.24).

Horizontal infiltration is the same as the very "early-time" ($t^{1/2} \gg t$) solution of the vertical infiltration.