Configurable JPEG Image Compression Using Approximate Computing

Mohammad Nasheman Ansari, Pradeep Chandar Chandramouli, Karan Suri, Matt Wojick, Bohan Wang
{nasheman, cpradeep, ksuri, mwojick, bohanw}@umich.edu

***Abstract*—In this project, we design a novel quality configurable JPEG Image Compressor using approximate computing. It uses custom designed programmable full adder cells designed to produce imprecise results, shorter critical paths and reduced switching capacitance on demand to achieve favorable quality of image vs. energy saving trade off by scaling the voltage. An accurate RGB to YCbCr converter, lossy Quantizer, and Huffman encoder that are part of the baseline JPEG compressor have been implemented, along with a novel DCT architecture built to make full use of the custom full adders. Carefully chosen configurability options enabled us to achieve voltage level shifting in the datapath using only non-invasive level converting flip-flops.**

***Index Terms*—JPEG, Approximate Computing, Programmable Adder, LDO, Huffman encoding, Run Length Coding, PSNR, SSIM.**

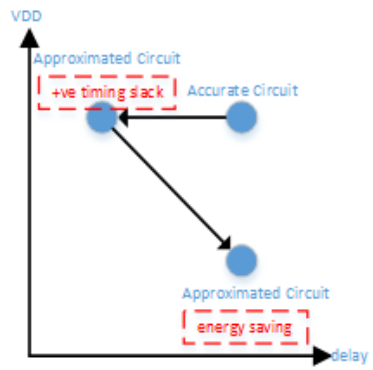

Figure 1: Voltage Scaling to achieve energy saving

I. Introduction

In today's world there is an explosive growth in the number of users of multimedia applications. Most of these applications run on mobile platforms that depend on batteries for energy. This scenario has created a design challenge to come up with energy-efficient data processing that caters to desired user quality requirements. These multimedia applications possess an inherent quality of error resilience. This means that approximations in intermediate computations are tolerable as long as the final output meets the user quality requirements. This relaxation in accuracy can be exploited to achieve energy savings at different levels of design abstraction: e.g. the algorithm, architecture, design automation and circuit level.

In a hardware JPEG Compressor, the most computationally intensive stage is the discrete cosine transform (DCT), which transforms the image from the spatial domain to the spatial frequency domain. Active research is ongoing to use approximate adders and multipliers for the DCT [1], [2].

Multiple approximate full adder architectures have been proposed and compared in [1] for the DCT. The key idea is to reduce the transistor count, and therefore switching capacitance, in the critical path. This gives positive timing slack for voltage scaling and energy savings. This concept is illustrated in Fig. 1. This approach varies from a voltage overscaling method of approximation wherein voltage scaling is aggressively done to the point of causing timing violations that can be tolerated by the application [3].

In this project, the objective is to build on the work presented in [1] and add a quality configurability feature into the architecture so that, depending on the battery level, an application processor can tune the JPEG Compressor's power consumption without perceivable quality loss. The various approximate full adders proposed in [1] were compared for area, power, and error introduced. A Ripple Carry Adder (RCA) structure was built using the different approximate full adders and its power consumption and accuracy were tested using Cadence Virtuoso and MATLAB. The accuracy comparison based on the MATLAB simulations in terms of the error mean and variance is shown in Fig. 2. These results matched the analysis done in [1] and provided us with a reliable starting point.

Based on the results, the approximation 5 proposed in [1] was chosen with consideration for the fact that both the approximate and accurate full adders have to be present in many of our full adder cells, since they also need to perform accurate operations if demanded. The DCT, which operates on each 8x8 pixel matrix of an image, can be split into 2 stages: the 1st stage involves a 1-D DCT on all columns and the 2nd stage involves a 1-D DCT on every row of the 1st stage's output. We attempt to implement two voltage islands with the least possible level converters. The fact that the two stages in the DCT don't have equal precision is used favorably. In the highest approximation scenario, the 1st stage and the 2nd stage DCT is operated at a scaled V_{dd} and further scaled V_{dd}, respectively. This indicates that a level converter is required only at the output of the second stage and not between the stages. Apart from targeting energy savings, this project also focuses on providing programmable quality control where the user has some control over the quality/energy savings. The remainder of the paper is organized as follows: In section II the baseline JPEG compression and the novelties in the top-level architecture are elaborated. Section III discusses the custom cells designed as part of the project. Final project

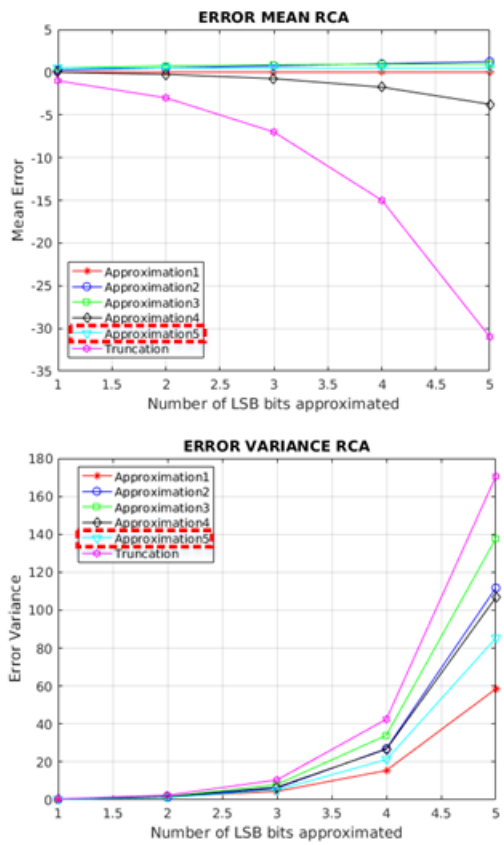

Figure 2: RCA accuracy comparison

status and full chip metrics are listed in section IV followed by conclusions in section V.

II. Top-level Architecture

A. Baseline JPEG Compression

The baseline JPEG compression built in this project is based on the ITU CCITT T.81[4] recommendation. The input is an RGB image that is split into blocks with each block consisting of $8x8$ pixels. Each pixel is represented by 24 bits (8 bits each for red, green, and blue). The first step is to transform each pixel from the RGB to YCbCr domain with the same number of bits. To take advantage of the strong spatial correlation, a 2-D discrete cosine transform (DCT) is applied on one block at a time to transform it from the spatial domain to spatial frequency domain. After the 2-D DCT, most of the information is stored in the lower frequency cells (top-left of an $8x8$ block) and hence the lower cells need more bits. Though this transformation itself is lossless and reversible, it sets the stage for lossy compression in the form of quantization. Here the $8x8$ DCT output is divided by a quantization matrix (selected from [4]) with the entire quantization matrix scaled by a factor ($QF = 50$) for acceptable image quality. This results in most of the AC (high frequency) cells becoming zero. In order to reduce the number of bits required to represent DC, differential pulse-code modulation (DPCM) is applied to the DC cell. In DPCM, the DC value is encoded as the difference in the DC value from last block to the current block. Following this, the $8x8$ matrix is parsed in a zigzag manner and serially sent to the Huffman encoder for compression.

In the Huffman encoder, the DPCM and AC values are treated differently. A basic primer of the Huffman encoding is given in [5], [6] and a detailed recommendation that is used in this project is given in [4]. As per Huffman encoding, the DPCM value is encoded as $\{size, amplitude\}$. Size represents the number of bits used to encode the amplitude, and the size itself is encoded using variable length coding (VLC). Amplitude i.e. the DPCM magnitude is encoded using variable length integer (VLI). AC cell encoding is similar to DPCM encoding, but uses run-length encoding (RLE), since AC cells tend to have many zeros. Here, each AC cell is encoded as $\{run\ length, size\}\{amplitude\}$. Run-length represents the number of zeros preceding a non-zero AC cell, which can be a maximum of 15. A run-length of 16 zeros and continuous zeros till end of block are handled as special cases. Size and amplitude are similar to that of DC. For $\{run\ length, size\}$ the AC VLC is used and for $\{amplitude\}$ VLI is used. For all the VLC, VLI hard-coded look-up-tables are used in hardware. Whenever a 32 bit compressed data is ready on the output bus of any channel, a corresponding $data_ready$ pulse is sent. The complete block diagram of the hardware is shown in Fig. 3. Since the 3 channel outputs amount to a total output of 96 bits, a channel merge stage was built that consists of separate FIFOs for each channel with a depth of 8 words. The 3 channel FIFOs are periodically polled to check if they are non-empty and their output (32 bit) is sent out as the final compressed data along with a 2 bit $data_ready$ tag indicating the channel information and the data validity of the data.

B. Architectural Improvements

Several architectural improvements have been made in the JPEG compression ASIC, mostly in the DCT module, to save area and power. The most optimal DCT hardware in terms of number of computations is the Loeffler DCT structure [2] which is analogous to a butterfly structure of an FFT. However, we decided to opt for the Canonical Sign Digit (CSD) based multiplication adopted from [1], [7] because implementing multipliers using only adders and shifters saves hardware. In the 1-D DCT equation, 8 samples $x0 - x7$ are transformed to $w0 - w7$. The comparison between ideal and approximate coefficients are given in [1], [7], with the coefficient for the DC component having higher accuracy than AC components. Each DCT output is realized by carry save adders which are composed of compressors and ripple-carry adders. The entire 2D DCT is realized using the 1-D DCT $\rightarrow$ transpose $\rightarrow$ 1-D DCT sequence. In order to determine the bit-width of DCT output and acceptable approximation, we analyzed the data range as well as the precision requirement and later ran MATLAB simulations iteratively. The 1st stage DCT has less bits of precision at the output than the 2nd stage. So to introduce the same amount of error, more bits could be approximated in stage 2 when compared to stage 1. To verify this theory we built a MATLAB model of compression and decompression, and used the full adder models with a control knob to decide the number of bits of approximation in all the multi-bit adders inside DCT stage 1 and stage 2. The results

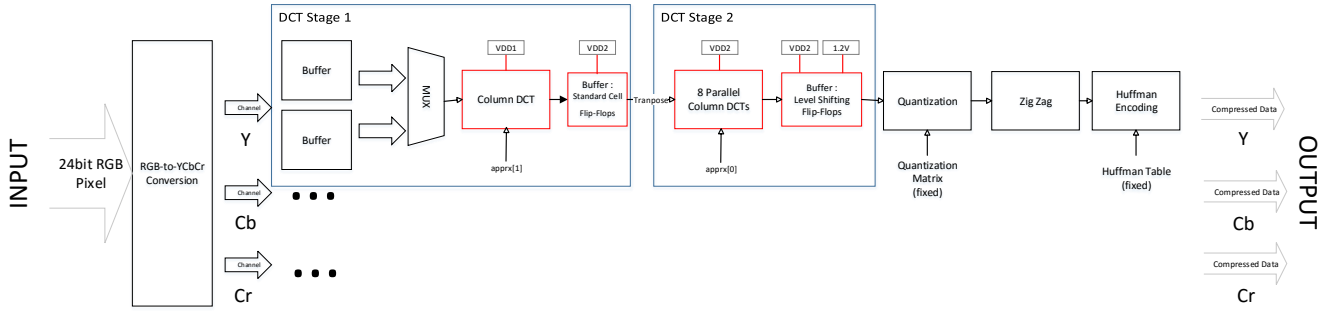

Figure 3: Detailed Top-level Architecture

show that when n LSB bits are approximated in stage 2, the quality of the image is better when compared to n LSB bits approximation in stage 1. Since more bits can be approximated in stage 2, we can also scale the voltage more in stage 2. We conclude that 6 bits LSB in stage 1 and 8 bits LSB in stage 2 is the maximum approximation yielding PSNR >30dB which relates to a high degree of similarity to the original image and allows a ∼10x compression without any perceivable loss in image quality.

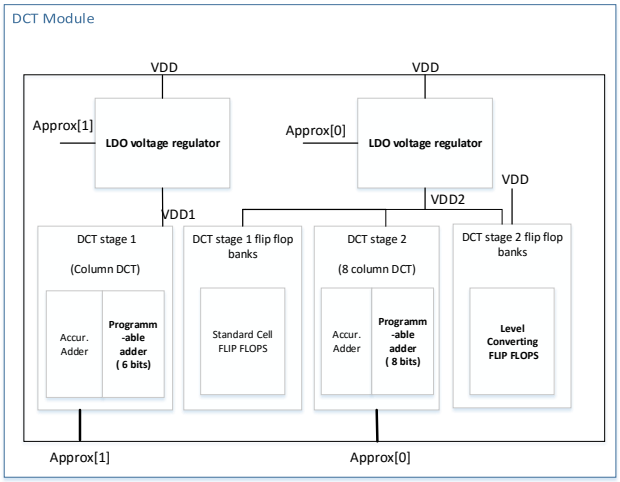

Figure 4: Novelty in Top-level Architecture

We constrained the quality control in such a way that level converting combinational logic can be completely avoided in the circuit. The only level shifting logic will reside in the 2nd stage DCT buffers as level shifting flip-flops, as shown in Fig. 4. Table I presents the quality configurations provided.

approx[1:0]	V_{DD1} (V)	V_{DD2} (V)	Stage 1 Mode	Stage 2 Mode	Quality Rank
00	1.2	1.2	accurate	accurate	1
01	1.2	0.93	accurate	approx	2
10	1.05	0.93	approx	approx	3

Table I: Voltage supply configurations

Secondly, we adopted time division multiplexing when sending pixel data for compression. Since only one pixel (24 bits) is fed to the JPEG compressor every clock cycle due to input pin limitations, stage 1 of the DCT must wait 8 cycles for one 8-pixel column to be ready to process. This means that stage 1 can be given 8 cycles to propagate each column to the next stage. It has been implemented in the form of a multi-cycle path, rather than pipelined, since the column will only change once every 8 cycles. This will allow us to increase the clock frequency so that the DCT does not become a bottleneck for the final throughput. After RGB conversion, we designed two ping-pong buffers to send a column of pixel data in the 8x8 block alternatively. We designed stage 1 of the DCT such that only 1 column DCT is computed at a time and the same hardware is re-used over time to compute the 1-D DCT for all the columns of an $8x8$ block. Therefore we are able to reduce the area and power of combinational hardware. Thirdly, we adopted logic gating at the input of DCT stage 2. Stage 1 sends an output every 8 cycles, but stage 2 needs to operate on this data only after an entire $8x8$ block is available, which takes 64 cycles. So, we logic gate the input of DCT stage 2 so that the combinational logic propagates the data only when required, thereby saving power. Initially we used NAND gates to realize the logic gating. So, but, the logic gating structure will pull down all its outputs to zero, thereby consuming some switching power. Hence, we hard-instantiated tri-state buffer standard cells in RTL design to keep output floating which saves on switching power. Finally, we pipeline the JPEG compression such that when the DCT is processing a new block, quantization and Huffman coding process the previous block. Handshake signals are propagated throughout the design so that modules are communicating properly. The DCT architecture RTL coding was done in a structured manner to allow the synthesis tool to be able to map the level-converting flip-flop and programmable adder modules directly to their respective custom .db files without actually synthesizing the RTL and mapping to Artisan cells or Synopsys DesignWare components.

III. Custom Cells

A. Programmable Adder

In order to have configurable quality control, we have utilized the programmable adder cells in the LSB section while using the accurate adders (std cells) for the MSB section.

The programmable adder consists of an accurate adder and approximate adder with a VDD selector block and multiplexer

to select between the accurate or approximate adder as shown in Fig. 5a. Depending upon the quality rank specified by the user, either the accurate or approximate adder will be selected. The approximate adder is based on the design of [1]. We have used the approximate-5 (Fig. 5b) adder in which $Cout = A$ and $Sum = B$. This circuit happens to be the most efficient topology in terms of transistor count, propagation delay ($\sim$1 buffer delay), and power consumption, as shown in Table II. When approximate adders are selected we can scale down VDD for the entire block to save power. VDD scaling is done in such a way that the worst-case delay based on max clock frequency is not exceeded. That is, voltage is scaled to the level that doesn't cause timing violation.

The programmable adder is a custom cell, but has been auto-placed and routed by Cadence Innovus, since there are thousands of them in our design. So we have characterized the adder using HSpice for timing and generated the .lib, .db, and .lef files for this block so that it could be auto placed and routed by Innovus.

Performance Metrics	Standard Cell(artisan)	Mirror Adder	Programmable Adder	Comments(w.r.t Mirror Adder)
Delay	206.63 ps	105.26 ps	89.26-160 ps	15.74ps Improvement
Power	18.83 µW	21.36 µW	10.03-22.33 µW	53% improvement
Area	36 μm^2	34.56 μm^2	77.76 μm^2	2X Area Penalty

Table II: Programmable Adder Metrics

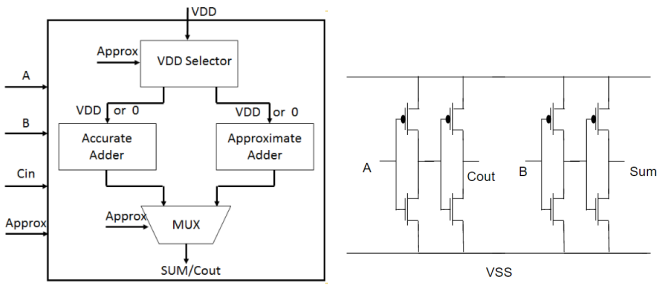

(a) Programmable Adder (b) Approximate Adder

Figure 5: Programmable Adder and Approx Adder

B. Level Converting Flip Flops

Level converting flips-flops (LCFFs) are required after the 2nd DCT stage since the 2nd stage will be working on a lower VDD with respect to the 1st stage in the design when the user selects the 2nd or 3rd quality rank.

We have used a master-slave LCFF, in which the master works on low VDD, whereas the slave works on high VDD [8]. This design contains a master-slave latch pair with a half-latch level converter embedded in the slave side. Although the master latch output experiences a threshold drop, the voltage level will be restored by the pull-up logic triggered by the NMOS pull-down network. This design has a smaller transistor count and less clock loading, but is carefully sized so that functionality is correct and power consumption is balanced with performance. Characterization was also done to the LCFF to enable auto placement and routing.

C. Digital Low Drop-Out Regulator (D-LDO)

As mentioned previously, different stages of the DCT can operate on different VDDs. The VDD for each stage of the DCT is related to the number of LSB bits approximated in each stage. Based on calculations and simulations it is found that the optimum regulated voltages for 6-bit and 8-bit LSB approximations in a DCT are 1.04V and 0.93V, respectively. In order to create these voltages and stabilize them, we use a digital LDO.

The design of the LDO is based on [9] and is composed of the following components: a comparator (Miyahara regenerative clocked comparator [10]), bidirectional shift register (serial in / parallel out), clock modulation block (peak/valley detector) [11], stacked PMOS array (varying sized PMOS), decap (1nF), and a balanced resistive/capacitive potential divider.

The Miyahara comparator is an efficient design with a preamp stage followed by regenerative cross coupled inverters. This design ensures extremely low metastability and at the same time provides fast conversion for low voltage operation. Post-pex Monte Carlo simulations were done for the SSSS corner at a clock period of 2ns and V_{cm} ranging from 0.4V to 0.9V. The power consumption was around 50µW with a metastability rate of 10^{-10} and an offset nominal of 1mV.

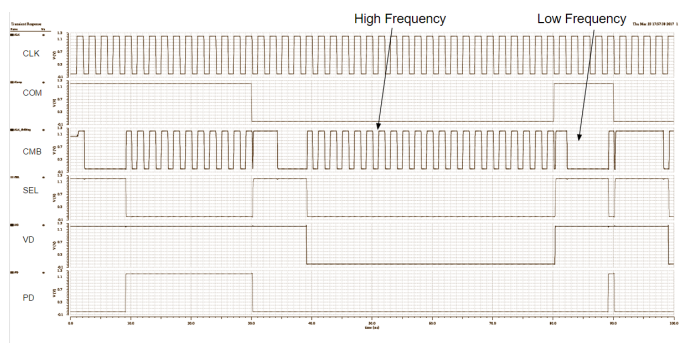

Figure 6: Simulation showing modulation of clock frequency based on comparator output (Clock Modulation Block)

The output of the clock modulation block (consisting of a counter, a valley detector (VD) and a peak detector (PD)) is used to drive the clock for the bidirectional shift register. It reduces the clock frequency for the flops if the comparator output toggles between 1 or 0 in less than 5 clock cycles. So if there is a sudden change in load, V_{out} will likely trail well away from V_{ref} and the comparator output will be a 1 for a long time (>5 clock cycles), which will promptly increase the frequency 4-fold. The shift register operates faster, turning on more PMOS's in a short duration, therefore balancing the load requirement quickly. Once the load current is balanced the comparator output starts toggling in <5 clock cycles and so frequency scales down by 4, which reduces clock activity and power considerably.

This LDO is easily able to regulate current requirements from 10µA to 80mA with a minute variation in the output of 10mV. The settling time is around 0.4µs when a clock of 100MHz is used.

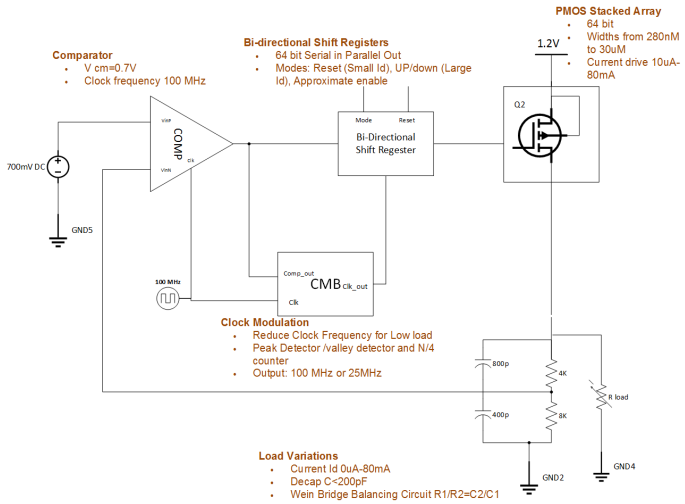

(a) Descriptive components for an LDO

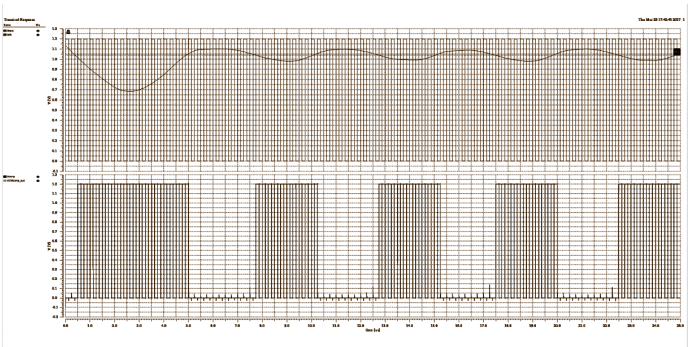

(b) voltage regulation for 1.04V at 10uA along with comparator output

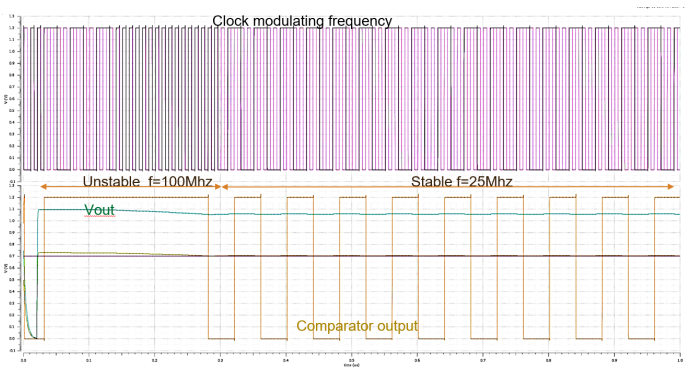

(c) Voltage regulation for 0.93V at 60mA

Figure 7: Digital LDO

The output needed is greater than the Vcm range, and therefore a capacitive divider circuit is used to ensure correct operation. To reduce ringing and ensure faster settling time, a large decoupling capacitor is being sourced from the parasitics of DCT stage 1 and 2, which considerably saves the area. A Wien bridge AC balancing circuit using ratioed RC on the output further eliminates the High clocking feed through activity of the comparator. This increases the accuracy of resolving smaller voltage difference and hence results in accurate output tracking. The sizing strategy of PMOS' in the stack is done keeping the current variation in mind. (10µA-80mA).

IV. Final Project Status and Full-Chip metrics

A. Design

The RTL for the design was completed prior to Design Review 2. All the custom cells have been designed, characterized and laid out. All of the cell characterization has been done using HSPICE, along with Perl scripts to automate the library format generation. The .lef, .lib, and .db files for the adder and lcff were generated and successfully used for Synthesis and APR. The PMOS stack, comparator and capacitors for the DLDO were manually laid out. The logic controller for the DLDO comprising of the Clock Modulation Block and the Shift-Register logic was coded in Verilog, synthesized using DC-shell and placed and routed using Cadence Innovus. The routing between the logic controller and the rest of the DLDO blocks were manually done after importing the logic controller .gds file to virtuoso.

B. Synthesis

A hierarchical synthesis approach was used to perform faster iterations and laid the ground work for hierarchical APR. Each module was synthesized and their abstracted .ddc files were used at the top-level. We have also taken care to constraint the multi-cycle paths mentioned earlier. All the high fanout nets like reset, approx_en were buffered using dc_shell itself to overcome max transition time violation. The clock net was kept as ideal, since it will be synthesized better during the clock tree synthesis phase of APR. The whole design was synthesized and we were able to achieve a max clock frequency of 217MHz which gave us some margin to achieve the targeted 200MHz for the final post-apr design. Back-annotated simulations on the synthesized net-list passed the verification test after all the flip-flops in the netlist were initialized to random bits.

C. APR and integration

Our initial floorplanning was based on relative sizes after synthesis. Since we wanted the aspect ratio of the final design to be as square as possible, we designed our floorplan in a compatible manner. All DCT stage 1 modules are powered by LDO1, and STAGE 2 from LDO2, and the rest from V_{dd} pin. At the top level, 16 pads are placed on each side for a total of 64 I/O pads and connected to the appropriate block level pins. The top level layout with pads is shown in Fig. 8. The pads have been positioned with consideration for the block positions, with input data on the left and output data mostly on the right.

D. Verification

The JPEG image compression and decompression were modeled in MATLAB. The DCT section of the compression model was coded in a manner which replicates the intended hardware where the number of bits of approximation in the two stage of the DCT were kept programmable. For deciding the optimal number of bits to be approximated in the two DCT stages, iterative Matlab simulations were run on a test image. The RTL development was iteratively done by comparing the output of each RTL block with the

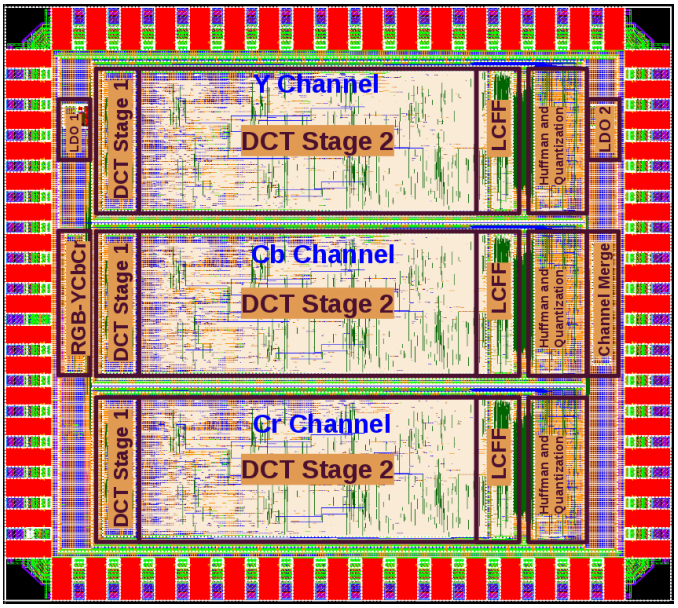

Figure 8: Toplevel layout

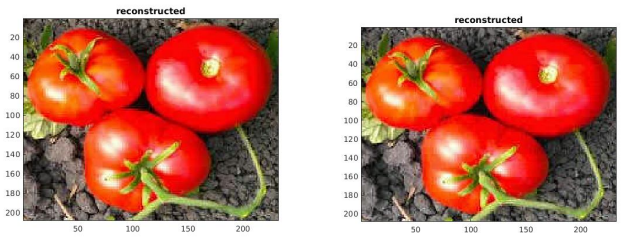

(a) Accurate reconstruction: PSNR=28.60dB, Power=19.6mW (b) Approximate reconstruction: PSNR=28.04dB, Power=8.35mW

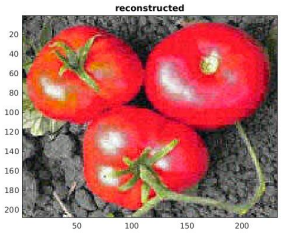

(c) Approximate reconstruction: PSNR=20.61dB

Figure 9: Different levels of Approximation and Power

Matlab model output. Reconstruction in Matlab verifies that our implementation is functional. For analyzing the quality of the reconstructed image, we used peak signal to noise ratio (PSNR) and structural similarity index (SSIM) which are standard metrics for image reconstruction quality. Currently the RTL simulations, post-APR back annotated simulations are passing the image reconstruction tests. For top-level mixed signal simulations, we use CustomSim. This enabled us to verify multi-V_{dd} functionality and extract power dissipation metric for different quality configurations. CustomSim reads the VCD file from Verilog simulation which records the switching activity, and we probe the DCT module with higher precision than other modules in power measurements. The result of image reconstruction, PSNR value, and corresponding power is shown in Fig. 9: (a) shows the image reconstruction without approximation (quality rank 1), and (b) shows the worst case approximation we proposed (quality rank 3). As a comparison, (c) shows over-approximation from Matlab, and we can observe significant quality loss.

All individual blocks such as the RGB to YCbCr converter, DCT stage 1, DCT stage 2, Level converting flip flops, and channel merge are LVS and DRC clean. For DLDO, we are facing some issues in DRC cleanup and adding passives. The top-level is not LVS/DRC clean.

E. Full Chip metrics

We have been able to achieve a core area of $\sim 3\text{mm} * 3\text{mm} = 9\text{mm}^2$ and die area of $3.61\text{mm} * 3.49\text{mm} = 12.6\text{mm}^2$ which includes pad area too. The max clock frequency for our design is 200MHz. The area overhead with respect to the baseline JPEG compressor is summarized in Table III. Although the area overhead for providing configurability is significant at cell level, at the top level it is only 6%. This certainly seems like a favorable trade off for the energy savings achieved when the power budget is low and the accuracy achieved when the power budget is high.

Metric	Baseline JPEG compressor	This work	Comments
Area of 1 full adder in DCT stage	34.56 μm^2	77.76 μm^2	125% area overhead
No. of full adders in DCT stage	10640	10640	-
Area of 1 F/F in DCT stage 2	33.12 μm^2	51.66 μm^2	56% area overhead
No. of F/F in DCT stage 2	768	768	-
Area of 2 DLDO	-	24840 μm^2	-
Toplevel Core area	**8.5** mm^2	**9** mm^2	**6% area overhead**

Table III: Area Overhead analysis

V. Conclusion

A. This Work

The JPEG compressor proposed in this paper is a novel attempt to provide a quality configurable compression feature at less area overhead where the user will have the control to decide the quality. Based on the quality, the level of energy consumed will be optimized using approximate computing and voltage scaling without compromising throughput. The key metric for quality has been measured in MATLAB and is around the targeted 30dB PSNR even for the maximum energy saving configuration. Energy savings achieved has also been proved using CustomSim simulations.

B. Future Work

If the number of pads in our design is ever a concern, we could add a parallel to serial conversion block, while sacrificing some throughput. Also, more granularity can be provided in the quality control by combining this work with the voltage over-scaling technique.

In general, as we port more computations onto mobile and remote energy constrained platforms, there is more opportunity for approximate computing, such as in-memory computation, or approximation at the architecture and algorithm level. This also opens up new research opportunities in developing compatible CAD flow and algorithms which can quicken the design development time.

REFERENCES

[1] V. Gupta, D. Mohapatra, A. Raghunathan, and K. Roy, "Low-power digital signal processing using approximate adders", *IEEE Transactions on Computer-Aided Design of Integrated Circuits and Systems*, vol. 32, no. 1, pp. 124–137, Jan. 2013.

[2] F. S. Snigdha, D. Sengupta, J. Hu, and S. S. Sapatnekar, "Optimal design of jpeg hardware under the approximate computing paradigm", 2016, pp. 1–6.

[3] D. M. G. Karakonstantis and K. Roy, "System level dsp synthesis using voltage overscaling, unequal error protection & adaptive quality tuning", 2009, pp. 133–138.

[4] *T.81 : Information technology – digital compression and coding of continuous-tone still images – requirements and guidelines*, International Telecommunication Union, Sep. 1992.

[5] B. Girod, *Ee398a image and video compression (lecture series)*, Stanford, 2012.

[6] *Ece477 multimedia systems (lecture series)*, Oregon State University.

[7] J. Park and K. Roy, "A low power reconfigurable dct architecture to trade off image quality for computational complexity", *IEEE International Conference on Acoustics, Speech, and Signal Processing*, vol. 5, pp. V17–20, 2004.

[8] F. Ishihara, F. Sheikh, and B. Nikolic, "Level conversion for dual-supply systems", *IEEE Transactions on Very Large Scale Integration (VLSI) Systems*, vol. 12, no. 2, pp. 185–195, Feb. 2004, ISSN: 1063-8210. DOI: 10.1109/TVLSI.2003.821548.

[9] Y. Okuma, K. Ishida, Y. Ryu, X. Zhang, P.-H. Chen, K. Watanabe, M. Takamiya, and T. Sakurai, "0.5-v input digital ldo with 98.7 current efficiency and 2.7-ua quiescent current in 65nm cmos", pp. 1–4, Sep. 2010, ISSN: 0886-5930. DOI: 10.1109/CICC.2010.5617586.

[10] M. Miyahara, Y. Asada, D. Paik, and A. Matsuzawa, "A low-noise self-calibrating dynamic comparator for high-speed adcs", pp. 269–272, Nov. 2008. DOI: 10.1109/ASSCC.2008.4708780.

[11] K. G. Jayaraman, K. Rawy, and T. T. Kim, "A 0.6-v power efficient digital ldo with 99.7 current efficiency utilizing load current aware clock modulation for fast transient response", pp. 103–106, Oct. 2016. DOI: 10.1109/APCCAS.2016.7803907.