©gopalax -International Journal of Technology And Engineering System(IJTES):
Jan –March 2011- Vol.2.No.3.

Real Time Vehicle Locking and Tracking System using GSM and GPS Technology-An Anti-theft System

Pravada P. Wankhade[1] and Prof. S.O. Dahad[2]

[1]Government College Of Engineering/Department of Electronics and Telecommunication,
Amravati (Maharashtra),India
Email:pravada_russ@rediffmail.com
[2](Head Of Department) Government College of Engineering /Department of Electronics and Telecommunication,
Amravati (Maharashtra),India
Email:dahad.sanjay@gcoea.ac.in

***Abstract*- This project deals with the design & development of a theft control system for an automobile, which is being used to prevent/control the theft of a vehicle. The developed system makes use of an embedded system based on Global System for Mobile communication (GSM) technology. The designed & developed system is installed in the vehicle. An interfacing mobile is also connected to the microcontroller, which is in turn, connected to the engine. Once, the vehicle is being stolen, the information is being used by the vehicle owner for further processing. The information is passed onto the central processing insurance system which is in the form of the sms, the microcontroller unit reads the sms and sends it to the Global Positioning System (GPS) module and using the triangulation method, GPS module feeds the exact location in the form of latitude and longitude to the user's mobile. By reading the signals received by the mobile, one can control the ignition of the engine; say to lock it or to stop the engine immediately. *The main concept in this design is introducing the mobile communication into an embedded system.* The designed unit is very simple & low cost. The entire designed unit is on a single chip.**

***Index terms* – Global Positioning System (GPS), Global System for Mobile communication (GSM), Advanced Virtual Risc architecture (AVR).**

I. INTRODUCTION

These days car theft cases are higher than ever, give your car an excellent protection with the only reliable anti-theft device. Car central locking system ensures the best guarantee to protect your car from different kinds of theft cases. It is a car security device that offers excellent protection to your car. A car with central locking security system helps the user to lock and unlock doors at the press of a button. Mainly two types of central locking systems are used in Auto industry - Automatic central locking system and Manual central locking system that ensures smoother and secured operation. Again this system could not prove to provide complete security and accessibility of the vehicle in case of theft. So a more developed system makes use of an embedded system based on GSM technology. The designed & developed system is installed in the vehicle. The main concept in this design is introducing the mobile communications into the embedded system.

A. Objective

The main aim of the project is to design and develop an advanced vehicle locking system in the real time environment. The user can send a STATUS message from his cell phone and as soon as the GSM module gets the message, it will check for the user's authentication and if found to be valid , it will immediately send the details of the locations like the latitude and the longitude using GPS module. So the user can get to know the exact location of the vehicle. At the same time message will b sent to a personal computer where user can get the exact location of vehicle pointed out on the google maps.

B. System Benefits

i. Vehicle owner can lock/unlock his vehicle with the help of a simple SMS (Short Message Service).

ii. Also the vehicle can be tracked with the exact location using GPS module in case of theft.

II. BLOCK DIAGRAM

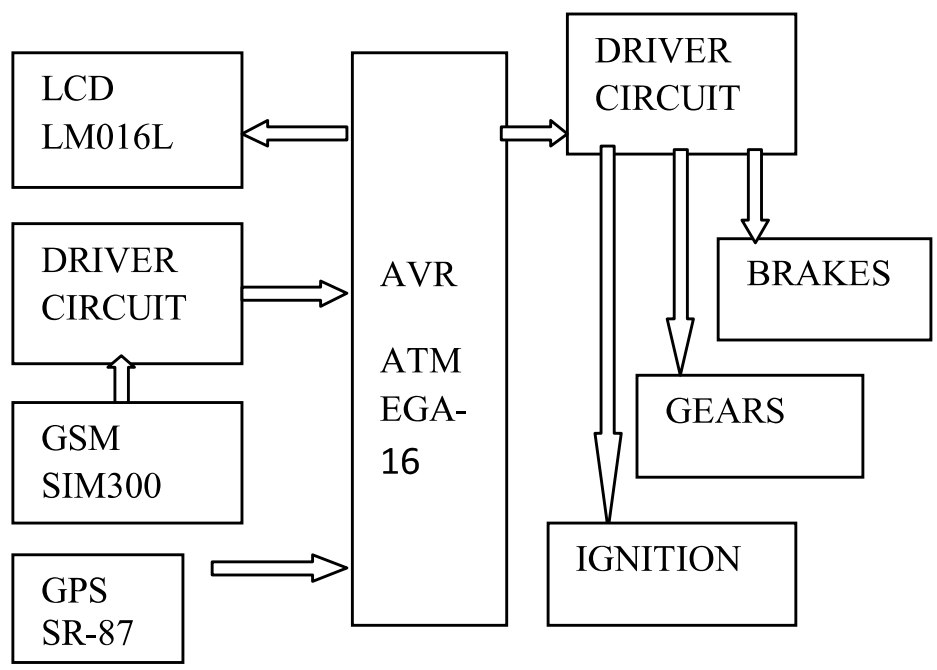

Figure 1. Block schematic for vehicle locking and tracking system.

A. Block diagram description

i. An AVR Microcontroller will be interfaced to GSM module, GPS Receiver and also to the vehicle locking system.

ii. Micro controller will keep listening to the New SMS arrival . If a sms arrived, it will check for aunthentication and after aunthentication is verified it will read the GPS location and will send it to the user's cell phone in the form of sms, also same information will be sent to a host pc.

iii. PC will have a Vb based application running on it.

iv. This will extract the sms information from GSM modem or cell phone,and it will plot the latitudes and longitudes on the google maps.For plotting on the google maps pc must have an internet connection.

v. Also, the vehicle can be locked/unlocked by sending a message to the system; say 'L' or 'U'.

vi. The working is done in the process i.e. the drivers RS232 from GPS and GSM modems are connected to drivers(RS232)of the microcontroller.

vii. Here the RS 232 acts as an interface for two way communication from microcontroller to GPS&GSM vice versa. The information which is available at the RS232 of microcontroller is converted into compatible TTL logic through MAX232.

viii. The LCD is to display the location which is computed by the GPS receiver and also displays the delivery report of messages forwarded and emmicrocontroller is used to apply the breaks in order to lock and unlock the engine of the vehicle. For the programming of microcontroller an embedded C language is given to the microcontroller through DB9 .

ix. When the vehicle is lost, we will send the message as 'data' to the GSM. Then GSM modem receives the message through the SIM card present in the modem. The GSM forwards this message to microcontroller. Then microcontroller verifies whether the received message from user or not (the mobile no is already fed in the microcontroller). At the same time the GPS receiver continuously calculates its location where it was on the earth with the help of satellite signals from the space and sends this information to microcontroller in the form of longitude and latitude. After seeking this information microcontroller sends this to the user via GSM.

x. When the location is detected then user sends this message as 'lock' to lock the engine of the vehicle. This message is forwarded to microcontroller through GSM. Then the microcontroller locks the vehicle engine with the help of relay by applying breaks to it. LED at the relay glows with a small sound.

xi. When the user gets the vehicle, he sends the message as 'unlock' to the GSM. Then the microcontroller unlock the engine of the vehicle. At that time the LED stops glowing immediately. The locking and unlocking of the engine is indicated by the on/off the LED.

B. ATMEGA16 microcontroller

Microcontroller is the heart of our circuit. It acts as an interface between GPS and GSM. In this project we have to use AT mega16 microcontroller. The ATmega16 is a low-power CMOS 8-bit microcontroller based on the AVR enhanced RISC architecture. By executing powerful instructions in a single clock cycle, the ATmega16 achieves throughputs approaching 1 MIPS per MHz allowing the system designer to optimize power consumption versus processing speed.

C. GSM Modem

A GSM modem is a specialized type of modem which accepts a SIM card, and operates over a subscription to a mobile operator, just like a mobile phone. From the mobile operator perspective, a GSM modem looks just like a mobile phone. A GSM modem can be a dedicated modem device with a serial, USB or Bluetooth connection, or it may be a mobile phone that provides GSM modem capabilities. A GSM modem could also be a standard GSM mobile phone with the appropriate cable and software driver to connect to a serial port or USB port on your computer.

D. GPS Modem

The Global Positioning System (GPS) is a space-based radio-navigation system consisting of a constellation of satellites and a network of ground stations used for monitoring and control. GPS is operated and maintained by the Department of Defense (DOD). The GPS is a constellation of satellites in orbit around the Earth which transmit their positions in space as well as the precise time. It is the receiver that collects data from the satellites and computes its location anywhere in the world based on information it gets from the satellites.

III. CIRCUIT DESIGN USING PROTEUS SOFTWARE

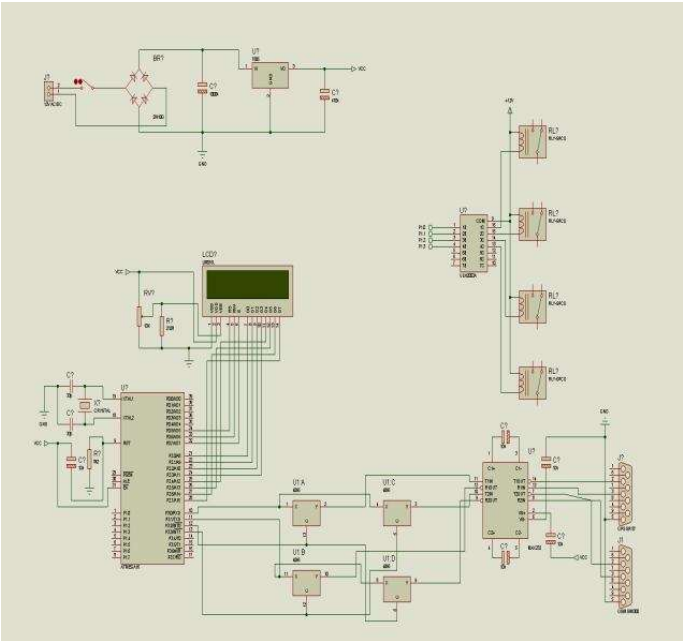

Figure 2. Circuit design for vehicle locking and tracking system using PROTEUS software

A. Description

i. *Power supply* – We need a 5V DC supply as the operating voltage for the microcontroller unit, GSM modem and GPS module. A 230V AC voltage from a transformer is converted into 12V DC voltage using a power regulator. A 7805 IC is used as a voltage regulator which gives 5V DC from 12V DC voltage.

ii. *LCD display* – LCD display device (LM016L) is interfaced with the microcontroller unit (ATMEGA16). The data pins (D0-D7) of LM016L are connected to PORT 2 of ATMEGA16. Data is written on PORT 2. Reset (RS) ,read/write (RW) and enable (E) pins are connected to PORT 0 pins for corresponding operations.

iii. *Serial communication* – Two serial ports are required for interfacing the GSM modem and GPS module. As ATMEGA16 has only one serial port, a switching IC 4066 is used to execute GSM/GPS operations whenever required. MAX232 chip connected to the AVR to enable UART transmissions between the AVR and the PC.

iv. *Relay* – We have used a relay for activation/deactivation of the vehicle ignition. Four relays i.e. RLY-SPCO are driven by the motor driver ULN2003A which is interfaced to PORT 1 of ATMEGA16.

IV. SOFTWARE USED

A. *AVR Studio* – An integrated development environment for AVR applications.

- AVR Studio is an Integrated Development Environment for writing and debugging AVR applications in Windows 98/XP/ME/2000 and Windows NT environments.
- AVR Studio provides a project management tool, source file editor and chip simulator.

i. *An example of what AVR Studio may look like during execution of a program is shown below in Figure. (3). In addition to the Source window, AVR Studio defines a number of other windows which can be used for inspecting the different resources on the microcontroller.*

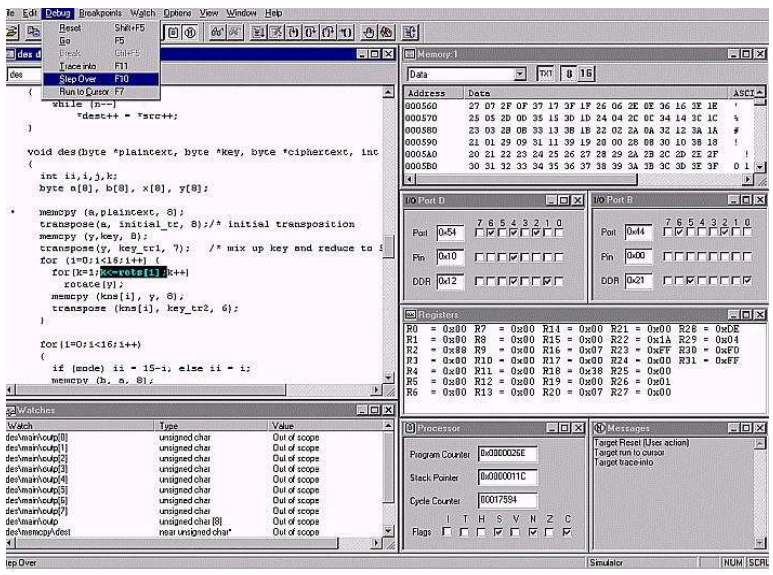

Figure 3. AVR Studio

ii. *Simulation with AVR Studio:*

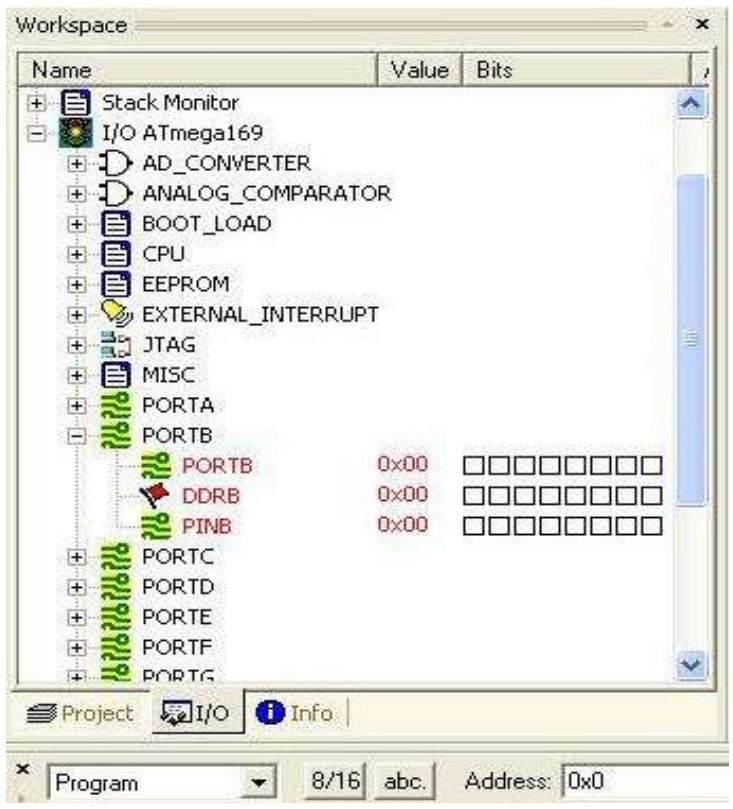

Figure 4. Simulation for LED blinking using AVR Studio

B. PROTEUS for circuit design and PCB layout

i. In our system PROTEUS ISIS is used to create circuit design and simulate it. Also PROTEUS ARES is used to create PCB layout.Already the circuit design using PROTEUS is shown in figure (2).

ii. In figure (5). given below Simulation for LCD display using PROTEUS ISIS design suite.

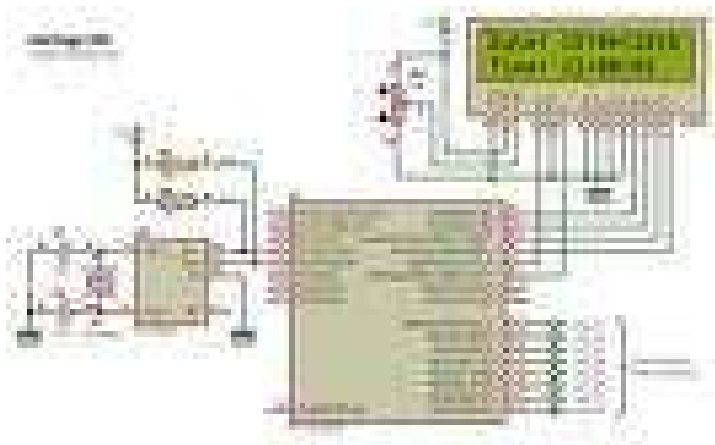

Figure 5. Simulation for LCD display using PROTEUS ISIS design suite.

iii. Likewise, simulation for different units used in the system like relay, power supply, led and serial communication is also done successfully.

III. HARDWARE UNITS

A. GPS Engine SR-87

i. The ProGin SR-87 series GPS modules incorporates high sensitivity, high performance SiRF StarIII chipset solution in a compact design.

ii. The module tracks upto 20 satellites at a time while offering fast time-to-first-fix and 1Hz navigation update.

iii. The unit is very suitable for broad applications such as Handheld, PDA, PPC or other battery operated navigation system.

B. SIM300 – a Tri-band GSM/GPRS engine

i. The hardware interface of the SIMCOM SIM300 module connects to the specific application and the air interface.

ii. SIM300 is a Tri-band GSM/GPRS engine that works on frequencies EGSM 900 MHz, DCS 1800 MHz and PCS 1900 MHz.

IV. TESTING

The software code which is in C is to be compiled ,debugged and tested. The software PROTEUS ISIS is used to create the circuit design and then simulate it with the help of AVR Studio which controls the execution of C programs for different resources on AVR microcontroller. Also a PCB layout for the circuit implementation is created using PROTEUS ARES software.

V. CONCLUSIONS AND FUTURE SCOPE

This project deals with the design & development of a theft control system for an automobile, which is being used to prevent or control the theft of a vehicle. The simulation of the circuit design and its implementation is done using PROTEUS software. This system is designed to improve vehicle security and accessibility. With the use of wireless technology vehicle owners are able to enter as well as protect their automobiles with more passive involvement.

Ideally, this project could be made more convenient and secure with the use of satellite modems instead of cell phones as tracking device as the system may fail when there is no network coverage. This design can be made more enhanced in future to support camera, handset phone / hands free, mobile data LCD display, web based tracking software, also PC based stand alone software. In our project the security system is based on embedded control which provides security against theft. The GSM modem provides information to the user on his request. The owner can access the position of the vehicle at any instant. He sends a message in order to lock the vehicle. The GPS receiver on the kit will locate the latitude and longitude of the vehicle using the satellite service. This is reliable and efficient system for providing security to the vehicles through GSM, GPS and serial communication. The maximum speed according to the standard is 20kbits/sec

REFERENCES

[1] http://www.automotivetechnology.com/ contractors/electronic/infinite

[2] http://www.allproducts.com/manufacture 100/extremtrac/product3.html

[3] http://auto.indiamart.com/car-accessories/car-central-system.html

[4] SIMCOM SIM300 AT Commands Set/Hardware interface description

[5] Quick Start Guide for Using the WinAVR Compiler with ATMEL's AVR Butterfly By Joe Pardue

[6] www.atmel.com/dyn/resources/ prod_documents/doc0856.p