Check for updates

ACM DIGITAL LIBRARY acm open

Latest updates: https://dl.acm.org/doi/10.1145/1120725.1120895

ARTICLE

Design of vehicle position tracking system using short message services and its implementation on FPGA

ARIAS TANTI HAPSARI, Bandung Institute of Technology, Bandung, West Java, Indonesia

ENIMAN Y SYAMSUDIN, Bandung Institute of Technology, Bandung, West Java, Indonesia

IMRON PRAMANA

Open Access Support provided by:
Bandung Institute of Technology

PDF Download
1120725.1120895.pdf
20 February 2026
Total Citations: 15
Total Downloads: 292

Published: 18 January 2005

Citation in BibTeX format

ASPDAC05: Asia and South Pacific Design Automation Conference
January 18 - 21, 2005
Shanghai, China

Conference Sponsors:
SIGDA

ASP-DAC '05: Proceedings of the 2005 Asia and South Pacific Design Automation Conference (January 2005)
https://doi.org/10.1145/1120725.1120895
ISBN: 0780387376

DESIGN OF VEHICLE POSITION TRACKING SYSTEM USING SHORT MESSAGE SERVICES AND ITS IMPLEMENTATION ON FPGA

Arias Tanti Hapsari

Department of Electrical Engineering
Bandung Institute of Technology
Bandung, Indonesia 40132
Tel : 62-21-8811365
Mobile phone : 62-818-696874
E-mail : atantih@yahoo.com

Eniman Y Syamsudin

Department of Electrical Engineering
Bandung Institute of Technology
Bandung, Indonesia 40132
Tel : 62-22-2502260
E-mail :
eniman@www.paume.itb.ac.id

Imron Pramana

PT Elektrindodaya Pakarnusa
(ELSA)
Bandung, Indonesia
Tel : 62-22-7801536
Mobile phone : 62-811-200552
E-mail : pramana@nusaweb.com

Abstract—This paper describes the design of a system that can give information of vehicle position everytime there's a request for it. The information of vehicle position is gained from GPS and it is transmitted using Short Message Services. The system is designed using VHDL on Altera MAX+plus II software, and it is implemented on Altera UP1X demoboard based on FPGA chip, which is Altera FLEX 10K EPF10K70RC240-4.

I. INTRODUCTION

The objective of this project is to achieve a design of such system that can give information of the vehicle position every time there's a request for it. The vehicle position is gained from the Global Positioning System while the data is transmitted using Short Message Services.

The system is designed using VHDL (*Very High Speed Integrated Circuit Hardware Description Language*) on Altera MAX+plus II software and it is implemented on Altera UP1X demoboard based on FPGA (*Field Programmable Logic Array*) chip, which is the Altera FLEX 10K EPF10K70RC240-4. The testing of the system is limited until in-circuit level.

II. SYSTEM DESCRIPTION

The designed system is a bidirectional communication system between the owner and its vehicle. The explanation can be seen in Figure 1.

The owner wants to know the vehicle position. Therefore he sends a signal to that vehicle. Then, the information of the vehicle position that is gained from GPS will be transmitted to him. The data is transmitted using SMS.

Part of the system that will be designed in this project is in the vehicle side (Part 1 in Figure 1).

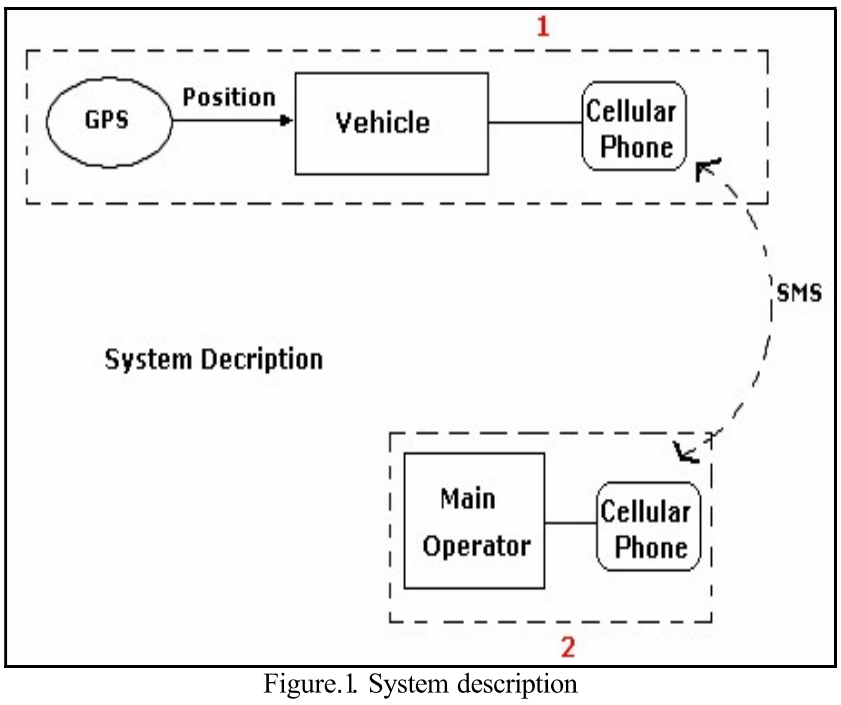

Figure.1. System description

III. SYSTEM DESIGN

There are two different kinds of inputs for this system. The first one is the input gained from GPS which is the sentence based on NMEA 0183 standard. The other one is the input received from cellular phone. But there is only one output for this system which is AT Command for sending the SMS.

This system is divided into three main parts, which are the SMS receiver, the GPS receiver and data processing, and the SMS transmitter modules.

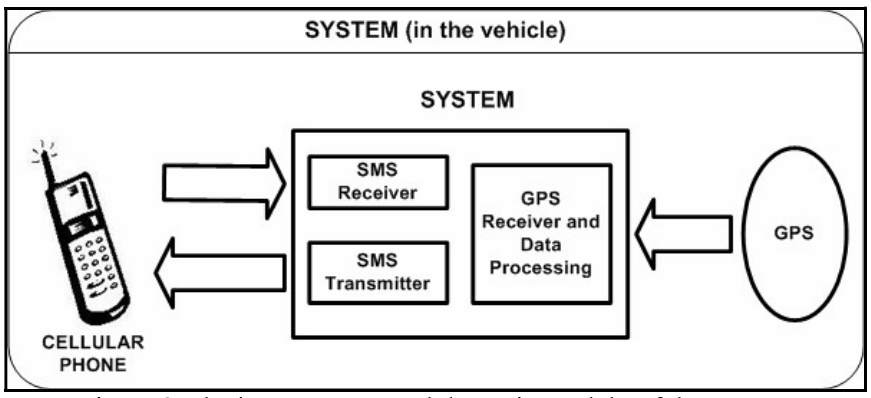

Figure.2 The input, output, and the main modules of the system

IV. SIMULATION RESULTS

The designed system is first verified using the timing simulation on Altera MAX+plus II software. Based on the timing simulation results, the maximum system operating frequency is 3.74 MHz.

V. SYSTEM IMPLEMENTATION

The designed system is implemented on Altera UP1X demoboard. There are two testing and verification procedures of this system. Both are limited until the in-circuit level.

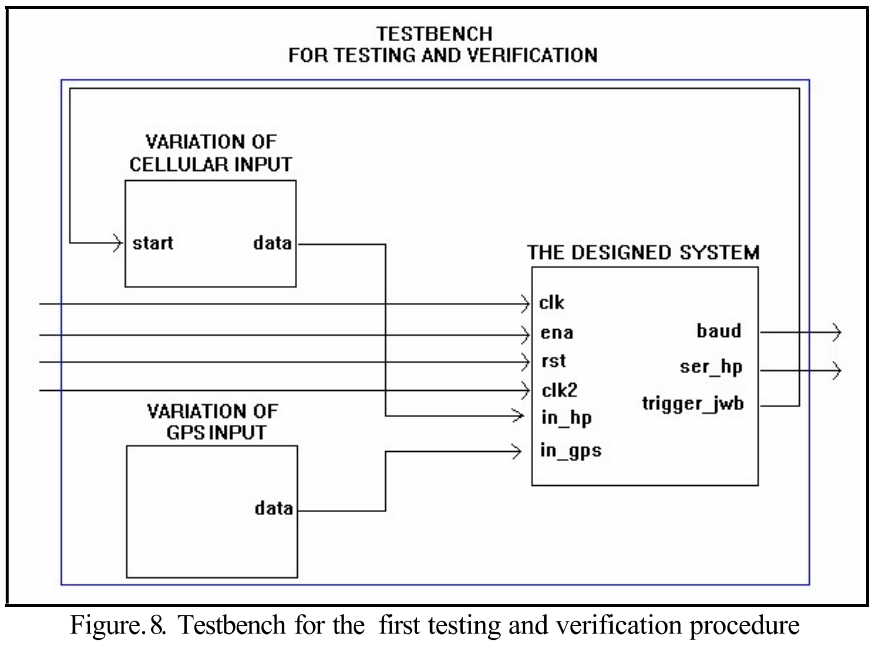

Figure. 8. Testbench for the first testing and verification procedure

In the testbench for the first testing and verification procedure, the inputs for the designed system are supplied from two different modules, which are the variation of cellular input module and the variation of GPS input module. The variation of cellular input module has a *start* signal that triggers the flowing of the *data* signal, which is a serial asynchronous data. The output of the designed system is the *ser_hp* signal which is a serial data that is transmitted to the cellular phone. The *clk* signal is the clock input provided from the oscillator crystal of 25.175 MHz. The *baud* signal is the output of the baud rate generator that supplies the *clk2* signal, which is the secondary clock for the system.

To make it possible to observe and verify every data, we use 3.15 Hz as the GPS baud rate and 12.59 Hz as the cellular phone baud rate. Certain important data are observed through seven segment and VGA.

In the second testing and verification procedure, we use the real cellular phone, which is Siemens C35, and for the GPS, we use a simulated data supplied from a serial port program using Visual C++. The block diagram for this second procedure is shown in Figure 10.

On the other hand, we can see the example of SMS as the result of this second testing and verification procedure in Figure 11. The vehicle position information gained from that SMS is 01° 04' South Lattitude ; 307° 06' West Longitude. This information is accurate according to the simulated data supplied from a serial port program on PC.

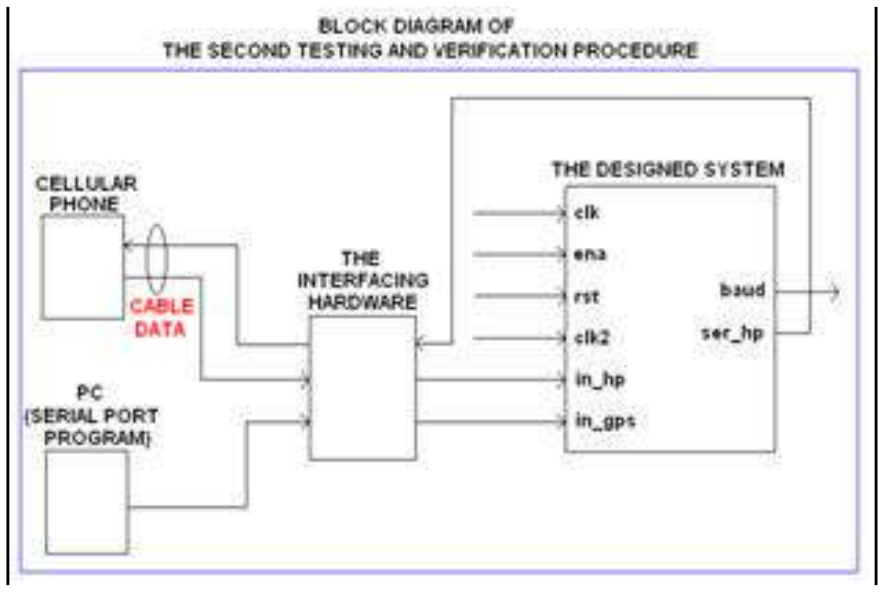

Figure.10. The block diagram of the second testing and verification procedure

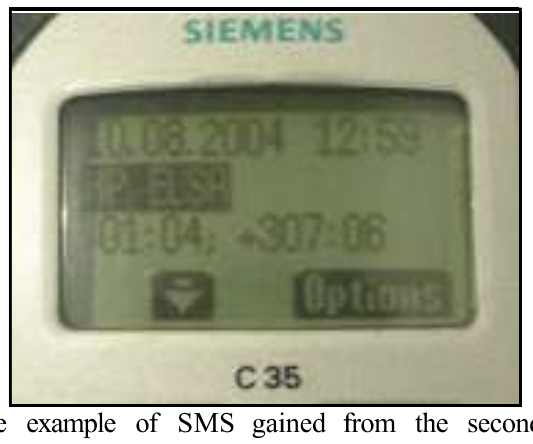

Figure.11. The example of SMS gained from the second testing and verification procedure

The result from the second testing and verification procedure is that the system works at both real baud rates, which are 19200 bps for cellular and 4800 bps for GPS.

VI. CONCLUSIONS

In this project, the result of the designed system has accomplished the target. The maximum frequency of this system based on timing simulation is 3.74 MHz, while based on the in-circuit verification, the system works at both real baud rates, which are 19200 bps for cellular and 4800 bps for GPS. The total number of logic cells used is 2472 of 3744 (66%).

ACKNOWLEDGEMENTS

The authors would like to express gratitudes to PT Elektrindodaya Pakarnusa that supports the facilities for this project. Along with Mulyanto for his assistance during working this project.

REFERENCES

[1] Khang, Bustam, *Trik Pemograman Aplikasi Berbasis SMS* , Jakarta : PT Elex Media Komputindo, 2002.

[2] *Hayes AT command parameters for sending and receiving SMS messages*, http://www.fastlogic.co.za/faq59.htm

[3] *Technical Specification* GPS GARMIN 35 LP TracPak, 2000, www.garmin.com

[4] *University Program Design Laboratory Package User Guide*, http://www.altera.com