Journal of Information Engineering and Applications
ISSN 2224-5758 (print) ISSN 2224-896X (online)
Vol 1, No.3, 2011

Design and Implementation Of Vehicle Tracking System Using GPS

Ambade Shruti Dinkar and S.A Shaikh

University Of Pune,India

*Email: Shruti.ambade100@gmail.com

Abstract:

"Surveillance system using phone line for security and tracking ". Based on the above statement, it is targeted that this project will serve as good indication of how important it is to curb car theft in the country. Surveillance is specified to car alarm system and the means of sending the data to the owner of the vehicle using SMS when the alarm is triggered. Due to the inefficient conventional car security system, the possibility of the car can be stolen is high. The main reason is that the alarm is limited to the audible distance. Somehow if there is another way of transmitting the alarm to the car owner ,tracking the vehicle ,knowing the exactly that the car is been stolen at the same time that is not limited to the audible and line of sight, the system can be upgraded. SMS is a good choice of the communication to replace the conventional alarm, because it can be done and does not require much cost. Although most of people know GPS can provide more security for the car but the main reason people does not apply it because the cost. Advance car security system is too expensive. Cost for the gadget is too high. Beside that, people also must pay for the service monthly. Tracking systems were first developed for the shipping industry because they wanted to determine where each vehicle was at any given time. Passive systems were developed in the beginning to fulfill these requirements. For the applications which require real time location information of the vehicle, these systems can't be employed because they save the location information in the internal storage and location information can only be accessed when vehicle is available. To achieve automatic Vehicle Location system that can transmit the location information in real time. Active systems are developed. Real time vehicular tracking system incorporates a hardware device installed in the vehicle (In-Vehicle Unit) and a remote Tracking server. The information is transmitted to Tracking server using GSM/GPRS modem on GSM network by using SMS or using direct TCP/IP connection with Tracking server through GPRS. Tracking server also has GSM/GPRS modem that receives vehicle location information via GSM network and stores this information in database. This information is available to authorized users of the system via website over the internet.

Keywords: GPS,GPRS,Sensors

The scope of study which is needed for the completion of this topic involves the following criteria:

1. Architecture of ARM9TDMI knowledge
2 . ARM9 programming
3. The study of modem functions which involves AT commands.
4. The circuitry and devices that is needed to construct the devices and establish the necessary communication between the devices.

Project Significance

By completing this project,

1. W e hope we can come up with the Vehicle security system to prevent auto theft.
2. It is an affordable system that upgrades the system already installed to the car.
3. Using this system, owner of the vehicle will be notified directly through SMS whenever intrusion occurs.

4. The SMS message gives immediate alert to the car owner, even if the thief gotten away with the car, so that the owner can immediately take instant actions to notify the local police department.

After providing a brief description on why this project is created and will hopefully be achieved. We also hope that this research can come up with a system that can helps to minimize the auto theft that has been increasing due to the flawed of the current car security system.

Objective:

Exploring GPS based tracking systems

- Developing Automatic Vehicle Location system using GPS for positioning information and GSM/GPRS or information transmission with following features:
- Acquisition of vehicle's location information (latitude longitude) after specified time interval.
- Transmission of vehicle's location and other information (including ignition status, door open/close status) to the monitoring station/Tracking server after specified interval of time.
- Developing a web based software to display all transmitted information to end user along with displaying location of vehicle on a map.
- The objective of the project is to build an additional feature to the present security system that will warn the owner of the vehicle by sending SMS when there has been an intrusion into the vehicle.
- To provide a solution to avoid car stolen in the lower cost than advance security car system. (GPS)

For the purpose of details of the block diagram refer fig 1.1 and fig 1.2

This vehicle tracking provides,the modules as

1) Anti theft system
2) Position tracking
3) Security such as while locking the cars, confirmation whether the doors are open or closed.

Overall system is partitioned into two major design units.

- In-Vehicle unit
- Tracking Server/Monitoring Station.

A. In-Vehicle Unit

This is major part of the system and it will be installed into the vehicle. It is responsible for capturing the following information for the vehicle

- Current location of vehicle
- Proximity sensors for parking assistance
- Vibration Sensors
- Ultrasonic Sensors for measuring the distance

In-vehicle unit is also responsible for transmitting this information to Tracking Server located anywhere in the world.

B. Data Transceiver

When all required information is extracted and processed, it needs to be transmitted to a remote Tracking Server which will be able to display this information to the end user. For real time tracking of vehicle, reliable data transmission to remote server is very important. Wireless network is required to transmit vehicle information to remote server. Existing GSM network is selected to transmit vehicle information to remote server because of broad coverage of GSM network. It is also cost effective rather than to deploy own network for transmission of vehicle information. For data transmission over GSM network GSM modem is required. GSM modem can send and receive data SMS text messages and GPRS data over GSM

network. Location data is transferred to microcontroller through serial interface. After processing of the data provided by GPS receiver, microcontroller transmits this information to remote location using GSM/GPRS modem. Microcontroller controls the operation of GSM/GPRS modem through serial interface using ATcommands.

C. Microcontroller is acting as Central Processing Unit for In-Vehicle unit. All operations of the In-Vehicle unit are to be controlled by the microcontrollerARM9. ARM9microcontroller needs instructions to operate the whole system. These instructions are provided to microcontroller by writing the software into microcontroller's flash memory. It reads the software instruction by instruction and performs the action as required by instruction.

Software flow

Microcontroller is acting as Central Processing Unit for In-Vehicle unit. All operations of the In-Vehicle unit are to be controlled by the microcontroller. Microcontroller needs instructions to operate the whole system. These instructions are provided to microcontroller by writing the software into microcontroller's flash memory. It reads the software instruction by instruction and performs the action as required by instruction. Complete software is broken down into small modules as shown in Fig 1.3.

Tracking Server

Tracking server maintains all information received from all In-Vehicle units installed in different vehicles into a central database. This database is accessible from internet to authorized users through a web interface. Authorized users can track their vehicle and view all previous information stored in database. Tracking server has a GSM/GPRS modem attached to it that receives SMS from In-Vehicle units and sends those messages to the server through serial port. Tracking server saves this information into database.
Design of Tracking Server is partitioned into four major parts.
(i) Hardware design for GSM/GPRS Modem (GM900- GPS)
(ii) Communication Software for GM900-GPS
(iii) Database
(iv) Web Interface

A. Web Interface Design

Tracking Server maintains all information in a database. To display this information to users front end software is required that can display all information to the user.The system is being installed the In-Vehicle unit in his vehicle and also the administrator of the system who is managing Vehicle Tracking System. There may be a number of vehicles installed with In-Vehicle units therefore server must be able to manage and distinguish information sent by all In-Vehicle units. For this purpose information must be available to server about all vehicles that are installed with In-Vehicle units. Whenever In-Vehicle unit is installed, information about that vehicle is stored in the database. Web interface must also support this functionality. Since web interface will be accessible over the internet therefore access must be restricted to authorized users only. Therefore information about all users of the system must be stored in database.

B. Database Design

Database is designed to store all received vehicle information, information about In-Vehicle units and users of the system. Information to be stored in the database is

- Information about users of the system
- Information about vehicles
- Information about received from vehicles

C. Design of Communication Software for GM900-GPS

The software that is to be designed will provide communication interface to the GM900-GPS modem attached to computer's serial port. It will control the operations of GM900-GPS. This software must be able to support following functions

- Configuration of GM900-GPS for sending and receiving SMS
- Receiving the SMS.
- Processing received SMS and saving information into database
- Sending SMS to in vehicle unit as required by user
- Accepting TCP/IP connections from In-Vehicle units
- Exchanging information with In-Vehicle units through internet

GM900-GPS will be configured in such a way that whenever new SMS arrives, GM900-GPS will send the information about SMS to the serial port. Software will be listening at serial port; it will read the SMS from GM300-GPS memory and extract the information from SMS. After extracting the information SMS will be deleted from GM900-GPS by software and information will be written to the database. Design requirements suggest that following objects are part of the system.

- GM900-GPS Modem
- Serial Port
- Vehicle Info
- Database

Main program listens for SMS and handles all communication with In-Vehicle units using SMS. It creates a separate thread for listening to TCP/IP connections, which receives incoming connections from In-Vehicle units and creates separate thread for each incoming connection, which allows any number of In-Vehicle units to connect to server.

Hardware Requriment:

1. GSM MODEM USED

This GSM modem is a highly flexible plug and play /GSM 900 / GSM 1800 / GSM 1900 modem for direct and easy integration with RS232. Voltage range for the Power supply and audio interface make this device perfect solution for system integrators and single user. Others features are Voice, Data/Fax, SMS, GPRS,etc

GSM modem characteristics:

- Tri band GSM GPRS modem (EGSM 900/1800 / 1900 MHz)
- Designed for GPRS, data, fax, SMS
- GPRS multi-slot class 10
- GPRS mobile station class B
- Fully compliant with GSM Phase 2/2+ specifications
- AT Command based

Conclusion

Designing and implementing enables us to establish relevant system design principles that are useful to other sensor.. It allows complexity to be placed at the appropriate levels of the system to achieve overall simplicity in system implementation. Our system decomposition allows each of the subsystems to be reusable by a wide variety of sensor network applications.The network management and debugging services are useful for deploying other sensor. We demonstrate a working system that not only monitors sensory data but also tracks and controls a higher tier system to accomplish a cooperative task in real time. The system assumes very little processing and communication requirements on the sensor. Logs of Tracking Server and Pointing out current location of vehicle. For vehicle tracking in real time, in-vehicle unit and a tracking server is used. The information is transmitted to Tracking server using GSM/GPRS modem on GSM network by using SMS or using direct TCP/IP connection with Tracking server through GPRS. Tracking server also has GSM/GPRS modem that receives vehicle location information via GSM network and stores this information in database. This information is available to authorized users of the

system via website over the internet. Currently In-Vehicle unit was implemented with two boards. The other limitaion is the traffic problem, the program will not able to detect which vehicle to track if it finds some vehicle in the current guess.If the near by vehicle is same as the one in the model . As in our data images if we bring maruti-800 near the car than the probability of error increases manifolds. If there is noise in the edge detected image, we can't really track the vehicle.What is meant by noise is that if some humans are coming near to the car then the edge detected image will have the edges of that human or animal or tree, then the program will try to match those edges with the car model. The program might treat this match as a success but really it will be off the track.Also If distance between the vehicle position in the two consequtive frames is two much then this tracking program can't detect the vehicle in the second frame and will try to track it in the susequent frame.

References:

1].GPSImages[online:] http://www.gpsvehiclenavigation.com/GPS/images.p

[2] R. Parsad, M. Ruggieri (2005) Applied Satellite Navigation Using GPS, GALILEO, and Augmentation Systems. London, ARTECH HOUSE.

[3]. GPRS (General Packet Radio Service), HSCSD &EDGE[online:]http://www.mobile-phones-uk.org.uk/gprs.htm

[4]. Telit Wireless Solutions (2008) GM862-GPS Modem

[5]. Microchip (2007) PIC18FXX8 Datasheet

[6]. Transportation District's Automatic Vehicle LocationSystem[online:] http://www.itsdocs.fhwa.dot.gov//JPODOCS/REPTS_TE/13589.html

[7]. Vehicle Tracking Systems Overview [Online:] http://www.roseindia.net/technology/vehicletracking/ VehicleTrackingSystems.shtml

[8] Real-Time Vehicle Tracking for Driving Assistance Andrea Fossati

CVLab – EPFL 1015 Lausanne – Switzerland andrea.fossati@epfl.ch Patrick Sch¨onmann

Cinetis SA 1920 Martigny – Switzerland patrick.schoenmann@cinetis.ch

[9]GPS-based Vehicle Tracking PhD MEng BEng MIEEE Assistant **Professor of Computer Engineering Program Lead Division of Sciences and Engineering** American University of Kuwait idamaj@auk.edu.kwHome:

[10]Real Time Web based Vehicle Tracking using GPS, World Academy of Science, Engineering and Technology 2010 Ph.D. Associate Professor College of Computer and Information Sciences Prince Sultan UniversityP.WebPage:http://info.psu.edu.sa/psu/cis/rzantout

[11]GPRS (General Packet Radio Service), HSCSD & EDGE[online:]http://www.mobile-phones-uk.org.uk/gprs.htmlUSA Today. (2004) Top car-theft areas in each state. [Online]. Available: http://www.usatoday.com/new "2007 OnStar-

Block Diagram

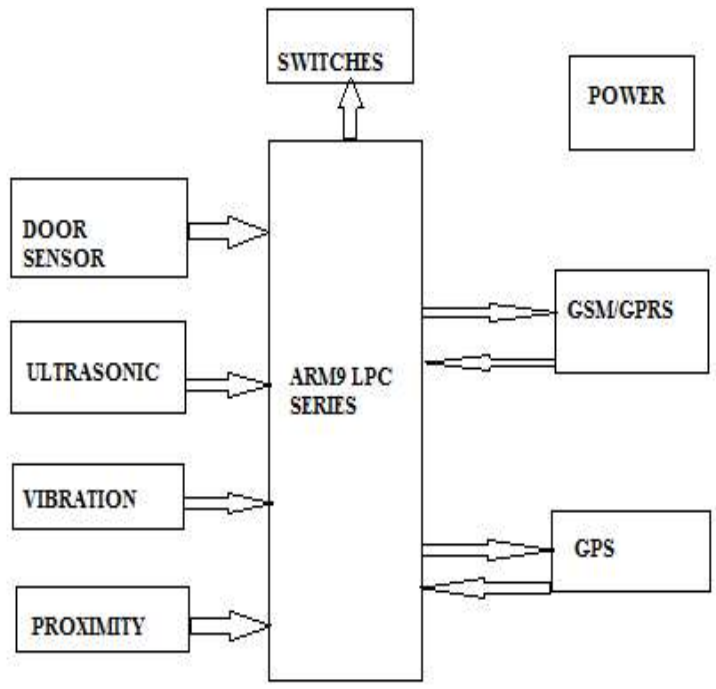

Fig 1.1 Block Diagram of Transmitter

Receiver

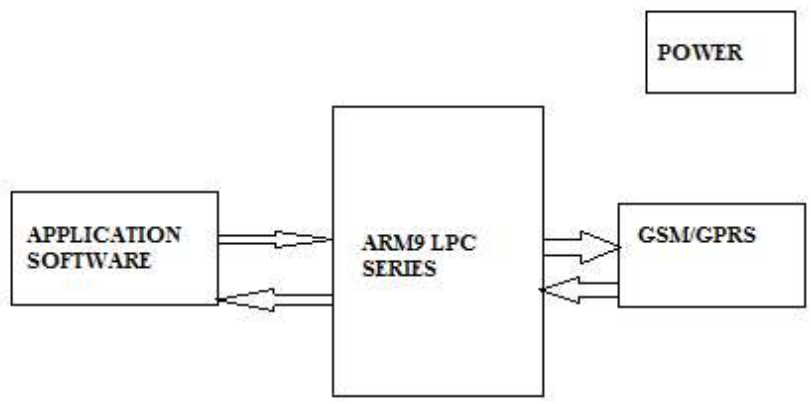

Fig 1.2 Block Diagram Of Receiver

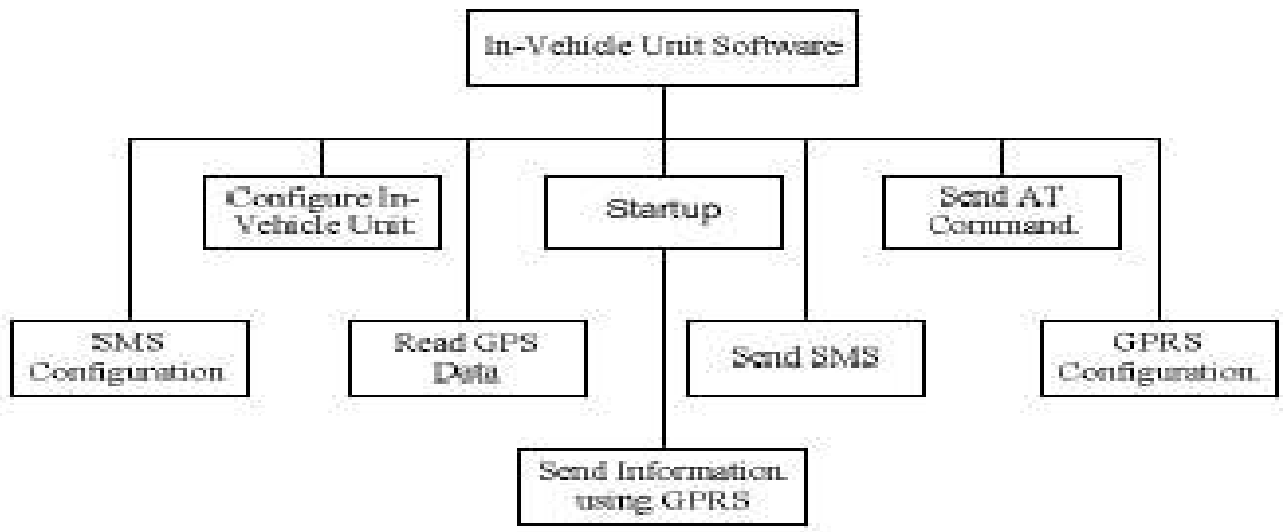

Fig 1.3 Breakdown of In-Vehicle software

International Journals Call for Paper

The IISTE, a U.S. publisher, is currently hosting the academic journals listed below. The peer review process of the following journals usually takes **LESS THAN 14 business days** and **IISTE usually publishes a qualified article within 30 days**. Authors should send their full paper to the following email address. More information can be found in the IISTE website : www.iiste.org

Business, Economics, Finance and Management	**PAPER SUBMISSION EMAIL**
European Journal of Business and Management	EJBM@iiste.org
Research Journal of Finance and Accounting	RJFA@iiste.org
Journal of Economics and Sustainable Development	JESD@iiste.org
Information and Knowledge Management	IKM@iiste.org
Developing Country Studies	DCS@iiste.org
Industrial Engineering Letters	IEL@iiste.org

Physical Sciences, Mathematics and Chemistry	**PAPER SUBMISSION EMAIL**
Journal of Natural Sciences Research	JNSR@iiste.org
Chemistry and Materials Research	CMR@iiste.org
Mathematical Theory and Modeling	MTM@iiste.org
Advances in Physics Theories and Applications	APTA@iiste.org
Chemical and Process Engineering Research	CPER@iiste.org

Engineering, Technology and Systems	**PAPER SUBMISSION EMAIL**
Computer Engineering and Intelligent Systems	CEIS@iiste.org
Innovative Systems Design and Engineering	ISDE@iiste.org
Journal of Energy Technologies and Policy	JETP@iiste.org
Information and Knowledge Management	IKM@iiste.org
Control Theory and Informatics	CTI@iiste.org
Journal of Information Engineering and Applications	JIEA@iiste.org
Industrial Engineering Letters	IEL@iiste.org
Network and Complex Systems	NCS@iiste.org

Environment, Civil, Materials Sciences	**PAPER SUBMISSION EMAIL**
Journal of Environment and Earth Science	JEES@iiste.org
Civil and Environmental Research	CER@iiste.org
Journal of Natural Sciences Research	JNSR@iiste.org
Civil and Environmental Research	CER@iiste.org

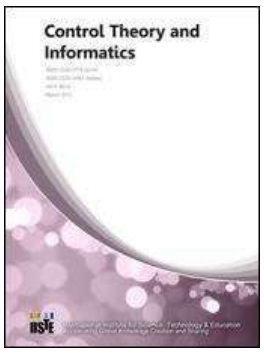

Life Science, Food and Medical Sciences	**PAPER SUBMISSION EMAIL**
Journal of Natural Sciences Research	JNSR@iiste.org
Journal of Biology, Agriculture and Healthcare	JBAH@iiste.org
Food Science and Quality Management	FSQM@iiste.org
Chemistry and Materials Research	CMR@iiste.org

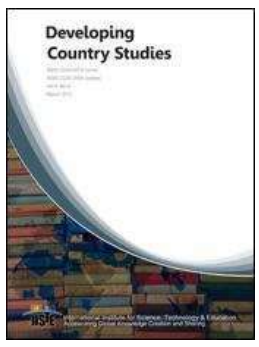

Education, and other Social Sciences	**PAPER SUBMISSION EMAIL**
Journal of Education and Practice	JEP@iiste.org
Journal of Law, Policy and Globalization	JLPG@iiste.org
New Media and Mass Communication	NMMC@iiste.org
Journal of Energy Technologies and Policy	JETP@iiste.org
Historical Research Letter	HRL@iiste.org
Public Policy and Administration Research	PPAR@iiste.org
International Affairs and Global Strategy	IAGS@iiste.org
Research on Humanities and Social Sciences	RHSS@iiste.org
Developing Country Studies	DCS@iiste.org
Arts and Design Studies	ADS@iiste.org

Global knowledge sharing:

EBSCO, Index Copernicus, Ulrich's Periodicals Directory, JournalTOCS, PKP Open Archives Harvester, Bielefeld Academic Search Engine, Elektronische Zeitschriftenbibliothek EZB, Open J-Gate, OCLC WorldCat, Universe Digtial Library , NewJour, Google Scholar.

IISTE is member of CrossRef. All journals have high IC Impact Factor Values (ICV).