ResearchGate

See discussions, stats, and author profiles for this publication at: https://www.researchgate.net/publication/266412980

Real Time Vehicle Tracking System using GSM and GPS Technology-An Anti-theft Tracking System

Article · June 2012

CITATIONS
62

READS
35,296

3 authors:

Kunal Maurya
Maharana Institute of Technology and Sciences
2 PUBLICATIONS **63** CITATIONS

SEE PROFILE

Mandeep Singh
Centre for Development of Advanced Computing
33 PUBLICATIONS **134** CITATIONS

SEE PROFILE

Neelu Jain
PEC University of Technology
17 PUBLICATIONS **109** CITATIONS

SEE PROFILE

Some of the authors of this publication are also working on these related projects:

Project Design and Development of Continuous Flow Hydroponics system View project

Project e waste View project

All content following this page was uploaded by Kunal Maurya on 13 April 2016.

The user has requested enhancement of the downloaded file.

Available Online at www.ijecse.org ISSN- 2277-1956

Real Time Vehicle Tracking System using GSM and GPS Technology- An Anti-theft Tracking System

Kunal Maurya [1], Mandeep Singh [2], Neelu Jain [3]
[1,3]Department of Electronics, [1,3]PEC University of Technology
Chandigarh- 160012, India
[1]kunalmaurya@gmail.com, [3]neelujain@pec.ac.in
[2] Department of E.P.D.T., [2]C-DAC , Mohali
[2]cdac_mandep@yahoo.co.in
Mohali-160071, India

Abstract- A vehicle tracking system is an electronic device installed in a vehicle to enable the owner or a third party to track the vehicle's location. This paper proposed to design a vehicle tracking system that works using GPS and GSM technology, which would be the cheapest source of vehicle tracking and it would work as anti-theft system. It is an embedded system which is used for tracking and positioning of any vehicle by using Global Positioning System (GPS) and Global system for mobile communication (GSM). This design will continuously monitor a moving Vehicle and report the status of the Vehicle on demand. For doing so an AT89C51 microcontroller is interfaced serially to a GSM Modem and GPS Receiver. A GSM modem is used to send the position (Latitude and Longitude) of the vehicle from a remote place. The GPS modem will continuously give the data i.e. the latitude and longitude indicating the position of the vehicle. The same data is sent to the mobile at the other end from where the position of the vehicle is demanded. When the request by user is sent to the number at the GSM modem, the system automatically sends a return reply to that mobile indicating the position of the vehicle in terms of latitude and longitude in real time.

Keywords – GPS, GSM, Vehicle tracking, Microcontroller

I. INTRODUCTION

The safety of private and public vehicles is a major concern nowadays so having GPS vehicle tracking system ensure their safety while travelling. This vehicle tracking system can be found in consumers vehicles as a theft prevention and retrieval device. Police can follow the signal emitted by the tracking system to locate a stolen vehicle. Generally this system is meant to be installed for the four wheelers but for country like India where majority of the people using two wheelers, here is the cheapest source of an anti-theft tracking system. Vehicle tracking systems are commonly used by fleet operators for fleet management functions such as routing, dispatch, on-board information and security. Other applications include monitoring driving behavior, such as an employer of an employee, or a parent with a teen driver. Vehicle tracking systems are also popular in consumer vehicles as a theft prevention and retrieval device. Police can simply follow the signal emitted by the tracking system and locate the stolen vehicle.

The rest of the paper is as follow. We review related technology in section II. In section III we proposed the design of tracking system and implementation. We conclude our work, advantages of device and future scope in section IV.

II. RELATED TECHNOLOGY

A. GPS Technology:

The Global Positioning System (GPS) is the only fully functional Global Navigation System (GNSS). The GPS uses a constellation of between 24 and 32 Medium Earth Orbit satellites that transmit precise microwave signals that enable GPS receivers to determine their location, speed, direction, and time. A GPS receiver receives the signals from at least three satellites to calculate distance and uses a triangulation technique to compute its two dimension (latitude and longitude) position or at least four satellites to compute its three dimension (latitude, longitude and altitude) position.

Therefore GPS is a key technology for giving device its position. GPS was developed by the United States Department of Defense. Its official name is NAVSTAR-GPS. It is originally used in military services but later allowed the system available free for civilian use as a common good. Since then, GPS has become a widely used aid

to navigation worldwide, and a useful tool for map-making, land surveying, commerce, and scientific usesIn This device we use a GPS receiver of HOLUX GR-67 series.
GPS parameters and specifications are given below.

Table-1 GPS parameters and specifications

GPS Module	Chipset	SiRF StarIII Chipset
	Receiver type	20 Channels 'All in view'
	Sensitivity	200,000+effective correlators for fast TTFF and high sensitivity acquisitions
	Protocol format	NMEA-0183
	Start-up times	Hot start: 1 S, Warm start: 38S, cold start: 42 S
	Accuracy of Position	10 meters, 2D RMS
	Power requirement	3.3~5.5VDC, 50mA
	Working Temperature	-10 ºC to + 60 ºC
	Command Statements	GPGGA,GPGSA, GPRMC,GPRSV

Figure-1: GPS Receiver

B. GSM Technology:

A GSM modem is a specialized type of modem which accepts a SIM card, and operates over a subscription to a mobile operator, just like a mobile phone.GSM (Global system for mobile) uses a process called circuit switching. This method of communication allows a path to be established between two devices. Once the two devices are connected, a constant stream of digital data is relayed.GSM networks consist of thee major systems the Switching System (SS), The Base Station(BSS) and the Mobile station(MS).

I. The Switching System

The Switching system is very operative system in which many crucial operations are conducted, SS systems holds five databases with in it which performs different functions. If we talk about major tasks of SS system it performs call processing and subscriber related functions. These databases from SS systems are HLR, MSC, VLR, AUC and EIR. The MSC in cooperation with Home Location register (HLR) and Visitor location register (VLR), take care of mobile calls and routing of phone calls. Authentication centre (AUC) is small unit which handles the security end of

the system and Equipment identity register (EIR) is another important database which holds crucial information regarding mobile equipments.

II. The Base Station System (BSS):

The base station system have very important role in mobile communication. BSS are basically outdoor units which consist of iron rods and are usually of high length. BSS are responsible for connecting subscribers (MS) to mobile networks. All the communication is made in Radio transmission. The Base station System is further divided in two systems. These two systems, they are BTS and BSC. BTS (Base Transceiver station) handles communication using radio transmission with mobile station and BSC (Base station controller) creates physical link between subscriber (MS) and BTS, then manage and controls functions of it.

III. Mobile Station (Subscriber):

MS consist of a mobile unit and a smart card which is also referred as a subscriber Identity Module (SIM) card. This card fitted with the GSM Modem and gives the user more personal mobility. The equipment itself is identified by a unique number known as the International Mobile Equipment Identity (IMEI).

The GSM modem used in this device is SUNROM SIM 900D.The parameters and specification of our GSM modem is given below.

Table-2 GSM Modem parameter and specification

GSM Modem	Frequency band	Quad band 850/900/1800/1900
	Transmission power	2 W @850/ 900 MHz 1 W @800/1900MHz
	Baud rate	9600
	Power supply	12V, 1A
	Operating temperature	-40 °C to 85 °C

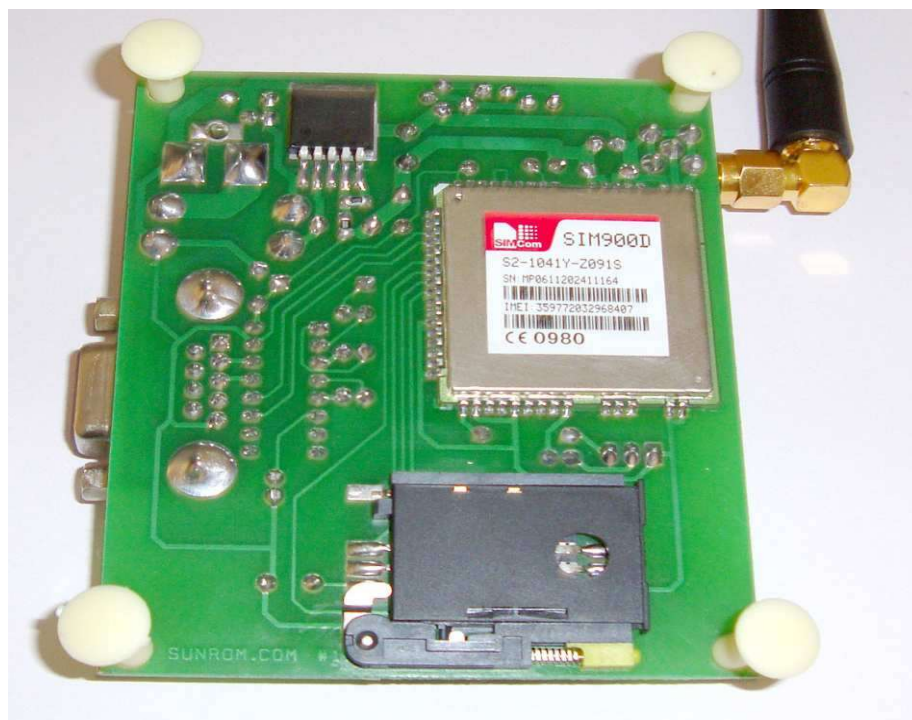

Figure-2: GSM Modem

C. Microcontroller:

The microcontroller is the heart of this device. It is the interface between the GSM module and the GPS receiver. A microcontroller is a small computer on a single integrated circuit containing a processor core, data memory, A/D converter and programmable input/output peripherals. In this device the microcontroller is programmed in such a way that it stimulates the GSM modem in message forwarding when a request is send by the user. Microcontrollers

IJECSE
International Journal of Electronics and Computer Science Engineering
WWW.IJECSE.ORG

are much smaller and simplified so that they can include all the functions required on a single chip. Having the microcontroller is of great use, as it has low design cost and add intelligence to the system.

III. DESIGN OF TRACKING SYSTEM

In this Paper it is proposed to design an embedded system which is used for tracking and positioning of any vehicle by using Global Positioning System (GPS) and Global system for mobile communication (GSM). In this Device AT89C51 microcontroller is used for interfacing to various hardware peripherals. The current design is an embedded application, which will continuously monitor a moving Vehicle and report the status of the Vehicle on demand. For doing so an AT89C51 microcontroller is interfaced serially to a GSM Modem and GPS Receiver. A GSM modem is used to send the position (Latitude and Longitude) of the vehicle from a remote place. The GPS modem will continuously give the data i.e. the latitude and longitude indicating the position of the vehicle. The GPS modem gives many parameters as the output, but only the NMEA data coming out and sent to the mobile at the other end from where the position of the vehicle is demanded. When the request by user is sent to the number at the modem, the system automatically sends a return reply to that mobile indicating the position of the vehicle in terms of latitude and longitude.

The block diagram of tracking system using GPS and GSM technology is presented in figure 3. The project is vehicle positioning and navigation system we can locate the vehicle around the globe with micro controller, GPS receiver, GSM modem. Microcontroller used is AT89C51. The code is written in the internal memory of Microcontroller i.e. ROM. With help of instruction set it processes the instructions and it acts as interface between GSM and GPS with help of serial communication of AT89C51. GPS always transmits the data and GSM transmits and receive the data.

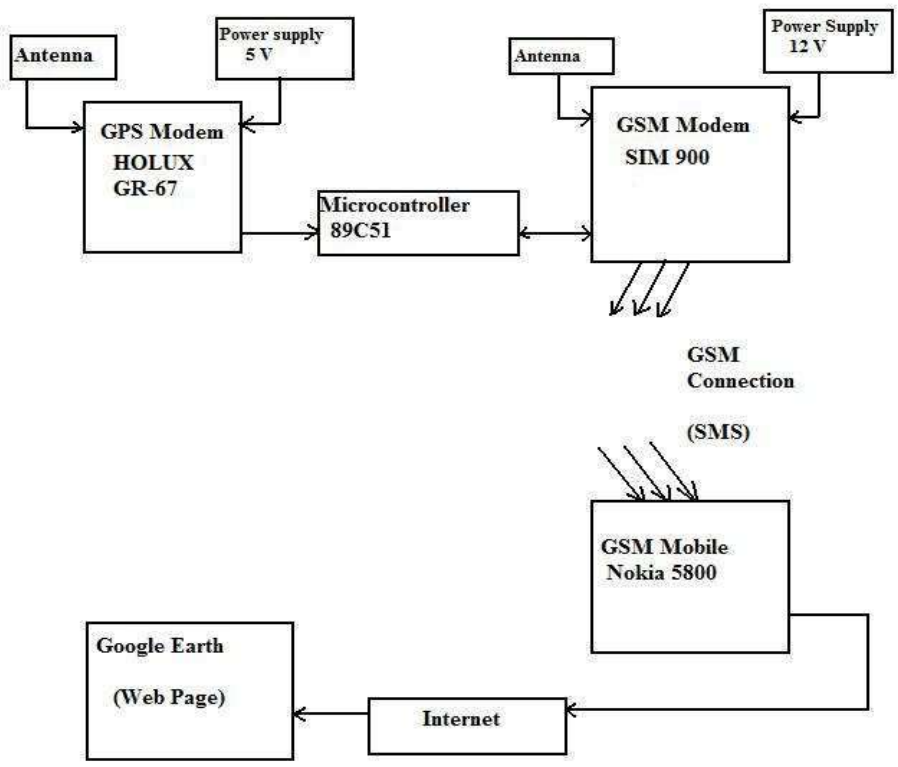

Figure: 3 Block diagram illustrating the concept of system

GPS pin TX is connected to microcontroller and GSM pins TX and RX are connected to microcontroller serial ports.Microcontroller communicates with the help of serial communication. First it takes the data from the GPS receiver and then sends the information to the owner in the form of SMS with help of GSM modem. GPS receiver works on 9600 baud rate is used to receive the data from space Segment (from Satellites), the GPS values of different Satellites are sent to microcontroller AT89C51, where these are processed and forwarded to GSM. At the time of processing GPS receives only $GPRMC values only. From these values microcontroller takes only latitude and longitude values excluding time, altitude, name of the satellite, authentication etc. E.g. LAT: 1728:2470

LOG: 7843.3089 GSM modem with a baud rate 57600.GSM is a Global system for mobile communication in this device it acts as a SMS Receiver and SMS sender. The power is supplied to components like GSM, GPS and Micro control circuitry using a 12V/3.2A battery .GSM requires 12v,GPS and microcontroller requires 5v .with the help of regulators we regulate the power between three components.

IV.CONCLUSION

In this paper we have proposed an anti theft system which can be used to track a vehicle fitted with the proposed device in it. It can also be used in wildlife tracking, asset tracking and in stolen vehicle recovery. In the future we may integrate other related devices in a vehicle such as sensors. We can create a server to see the vehicle route and other information on our computer and we can save the trajectory of it. The sensors installed in our vehicle can report the vehicle information to our server and it can form an intelligent tracking system. There are various reasons why car owners and public vehicle operators prefer to have a GPS. You can determine your location, whether you are travelling locally or in a foreign land, having a GPS is truly an advantage. If you think you are lost, you can use your GPS receiver to know your exact location. Vehicle tracking systems are commonly used by fleet operators for fleet management functions such as routing, dispatch, on-board information and security. Other applications include monitoring driving behavior, such as an employer of an employee, or a parent with a teen driver.

V. REFERENCE

[1] A. Goel and V. Gruhn, "Fleet Monitoring System for Advanced Tracking of Commercial Vehicles", *Proceedings of the 2006 IEEE International Conference on Systems, Man, and Cybernetics (SMC 2006)*, pp. 2517-2522, Taipei, Taiwan, 08.10.2006-11.10.2006.

[2] Chia-Hung Lien, Chi-Hsiung Lin, Ying-Wen Bai, Ming-Fong Liu and Ming-Bo Lin, "Remotely Controllable Outlet System for Home Power Management," *Proceeding of 2006 IEEE Tenth International Symposium on Consumer Electronics (ISCE 2006), St. Petersburg, Russia*, pp. 7-12, June 28-July 1, 2006.

[3] E. D. Kalpan, Understanding GPS: Principles and Applications, Artech house Publishers, ISBN 0890067937, February 1996.

[4] Junaid Ali, Shaib Nasim, Taha Ali, Naveed Ahmed and syed Riaz un Nabi, "Implementation of GSM based Commercial Automobile Tracker Using PIC 18F452 and Development of Google Earth Embedded Monitoring Software" *Proceedings of 2009 IEEE student conference on Research and development(SCOReD 2009)*, 16-18 Nov,2009, UPM Serdang, Malaysia

[5] M. Mcdonald, H. Keller, J. Klijnhout and V. Mauro, "Intelligent Transport Systems in Europe: Opportunity for Future Research" *World Scientific Publishing Company*, ISBN 981270082X, 2006.

[6] Muhammad Ali Mazidi, Janice Gillspie, Mckinlay, Rolin D., " The Microcontroller in Embedded System: using Assembly and C," *2nd edition published by Pearson Education.*

ISSN 2277-1956/V1N3-1103-1107

IJECSE
International Journal of Electronics and Computer Science Engineering
WWW.IJECSE.ORG

View publication stats