Vehicle Tracking System Using GPS

Sathe Pooja[1]

[1]Disha Institute of Management & Technology, Raipur, Chhattisgarh, India

Abstract: ***The paper describe a practical model for routing and tracking of mobile vehicles in a large area outdoor environment based on the Global positioning system (GPS) and Global system for mobile communication (GSM). The supporting device GPS continuously move with the car and will calculate the co-ordinates of each position and when required by the owner it can be communicated with the help of GSM modem which is installed in both Transmitter and receiver section. GSM modem is controlled by a 32 bit ARM7 LPC2148. The device will collect position to supervised center by the SMS (Short Message Service) or GPRS (General Package radio service) and which can be located in the Google Earth and so the current position of the car can be known.***

Keywords: ARM7 LPC2148, Google Earth, G[illegible]

1. Introduction

In the present growing economy, the cou[illegible] uprising of crime rate. Car theft, which is [illegible] for the conduct of this project, is one of the [illegible] which is hard to eliminate. The latest trend [illegible] involves the car being towed away, and [illegible] capturing where the alarm disabler signal can be traced and duplicate by a thief with the device to capture [illegible] use it to disable the alarm. There are many alternatives to prevent the car theft, common car alarm system [illegible] all cars have the system installed, and als[illegible] Positioning System (GPS) where the whereabouts o[illegible] can be traced. The project and research is con[illegible] additional features in car alarm system. The device [illegible] added to the present car alarm system without any [illegible] modification to it. Vehicle security system using SMS/G[illegible] is an advanced feature of the existing car security system.

The project describe a practical model for routing and tracking with mobile vehicles in a large area outdoor environment based on the Global Positioning system (GPS) and Global system for mobile communication(GSM). The supporting device GSM modem GM862, are controlled by a 32 bit microcontroller LPC2148 implemented a new version ARM cortex M3 core. The device will collect position to supervised cent[illegible] SMS (Short M[illegible]ervi[illegible] GPRS (Genera[illegible]e radio servic[illegible] ha[illegible] device mounte[illegible] vehicle is con[illegible] the [illegible] Once, the ve[illegible]ing stolen, the [illegible]ion [illegible] used by the v[illegible]ner for further [illegible]g. S[illegible] remote place[illegible]ular number is [illegible] own[illegible] hardware ki[illegible] installed in the [illegible] By reading the signals rec[illegible] the mobile on[illegible]rol the ignition of the e[illegible]y [illegible] stop [illegible] immediately. We can modify this concept such that the vehicle owner also can lock the vehicle from his mobile phone.

2. Problem Identification

It is targeted that this project will serve as good indication of how important it is to curb car theft in the country. Surveillance is specified to car alarm system and the means of sending the data to the owner of the vehicle using SMS when the alarm is triggered. Due to the inefficient conventional car security alarm system, the possibility of the car can be stolen is high. The main reason is that the alarm is limited to the audible distance. Somehow if there is another way of transmitting the alarm to the car owner that is not limited to the audible and line of sight, the system can be upgraded. SMS is a good choice of the communication to replace the conventional alarm, because it can be done and does not require much cost [8]. Although most of people know GPS can provide more security for the car but the main reason people does not apply it because the cost. Advance car security system is too expensive. Cost for the budget is too high. Besides that, people also must pay for the service monthly.

1 Objective of the Study

1. The objective of the project is routing and tracking vehicle in a large area environment based on the Global Positioning System (GPS) and Global System for Mobile Communication (GSM).
2. To provide a solution to avoid car stolen in the lower cost than advance security car system (GPS).

2.1.1 Scope of Study

If car gets robbed it is difficult to keep track of it with this [illegible] able [illegible] This helps us to get complete surv[illegible] of our ve[illegible]

Diag[illegible]

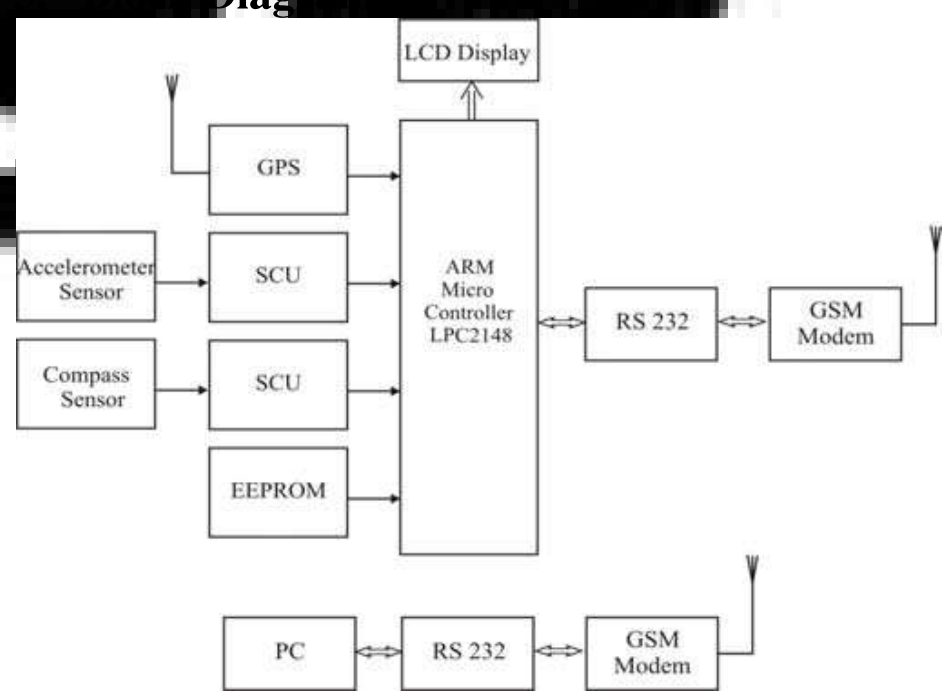

Figure 1: Block Diagram

4. Methodology

The above block diagram explain the working of the system which can be designed from this research paper a ARM processor LPC2148 is used here for automation and controlling of the other supporting devices those are GPS, GSM, Accelerometer sensor compass sensor. Actually this paper gives the practical model of a vehicle tracking system which can do routing, tracking of moving vehicles in large area. It consists of two sections, first which will be inbuilt in the car which is having GPS in it and as the car moves the location of the car goes on changing continuously the GPS find the location in terms of two co-ordinates that are Longitude and latitude. These [illegible] are communicated to another section by GSM [illegible] shown in the block diagram both the part con[illegible] for communication. This GSM is connec[illegible] puter through RS232 which should have inte[illegible] it. So, that as soon as the co-ordinates are [illegible] located in the Google Earth. As shown in [illegible] the two more sensors are used that are accele[illegible] to sense weather the vehicle is moving or steady [illegible] sensor for identifying the direction of moving [illegible]

4.1 Software Required

Two software's were used; one for the Arm processor i.e. in Embedded C for interfacing and controlling [illegible] devices and in another section Visual Basic softwa[illegible] for interfacing of Google Earth. So that co-ordinates [illegible] located in the Google map.

4.2 Terminology

4.2.1 Latitude & Longitude

Both are the angles that are uniquely defined on the sphere. Together the angle comprises the co-ordinate scheme that can locate or identify the geographic position on the planet. Latitude is defined with respect to the equatorial reference, the value becomes positive as it moves towards north and it becomes negative towards south. Longitude is measured with reference to prime meridian and is positive towards east and negative to[illegible]

4.2.2 Routing

Routing mea[illegible] pass sensor is [illegible] calcu[illegible] angle betwee[illegible] rent direction [illegible] vel[illegible] magnetic no[illegible] on [1].

4.2.3 Trac[illegible]

Tracking [illegible] b[illegible] ous[illegible] vehicle without any interference of the driver or the method of continuously collecting the co-ordinates of moving vehicle that is getting from GPS receiver.

4.2.4 Vehicle Disabling

Vehicle can be disabled just by sending the SMS from the GSM modem of owner to the GSM modem which is in car. The form which is generated in Visual Basic in the computer is connected to the GSM. If the message is send to disable the vehicle than the vehicle can be disabled. This feature is not present with the any of the vehicle security system.

5. Practical Model

Figure 2: Transmitter Section inbuilt in the vehicle

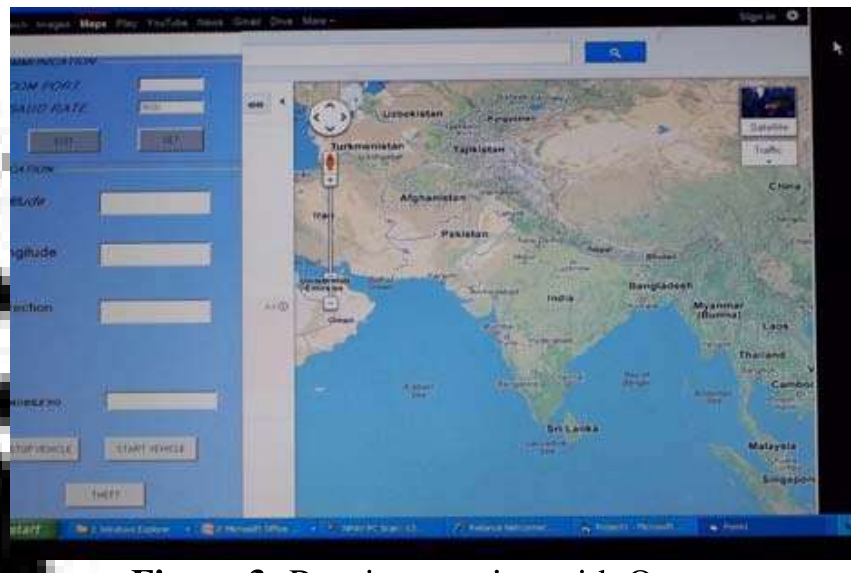

Figure 3: Receiver section with Owner

[illegible] Result

The results on the user interface of supervised center will show the routing and tracking function of the system. The project is locating the position of the car. By designing this project the ignition of the project can be stopped or the speed can be locked so that the thief can be catch easily, this is one of the additional features of the project. There are some approaches affect the accuracy of the system such as the delay of sending and receiving data via GSM network, the multi path effects can make the position error on the GPS receiver, the weather and the assuming of the variation [illegible] orth [illegible] North Direction is zero etc.

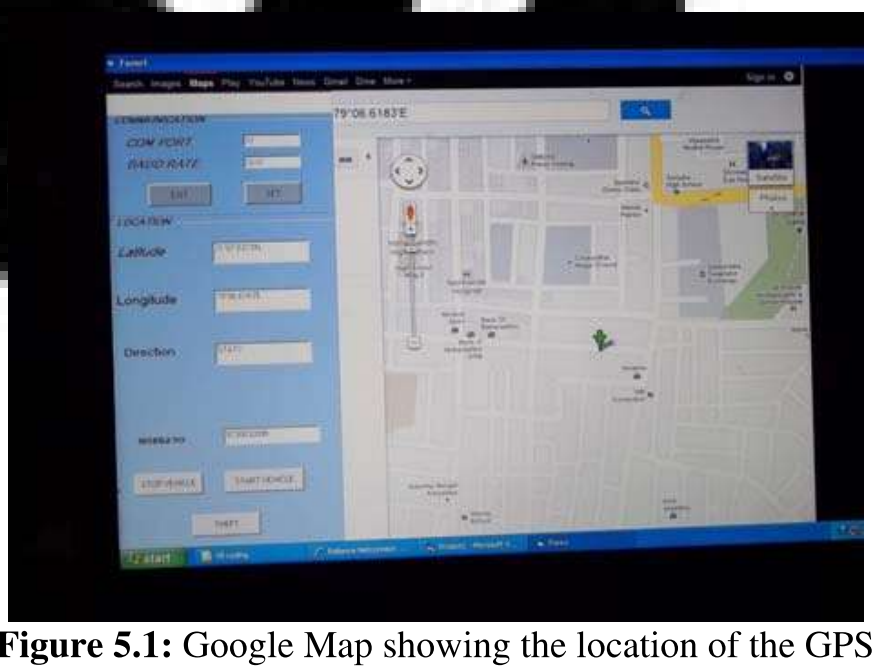

Figure 5.1: Google Map showing the location of the GPS

6.1 Discussion

A practical system for routing and tracking mobile vehicle is presented in the project. In some cases GPS may give us no answer, the wrong answer, or an answer with insufficient accuracy which was one of the main reasons for the limitations of GPS accuracy. The accuracy of system is affected by some factors such as weather, environment around the mobile vehicle, GPS receiver, compass sensor and the variation between True North Direction and Magnetic North Direction, etc. The future works include optimizing the hardware system, choosing a suitable GPS receiver and compass sensors and for more accuracy one can go for DGPS i.e. Differential Global Positioning System, by using DGPS accuracy can be increased [illegible] meters whereas in GPS it is 5-10meters.

7. Conclusion

Automobile theft and accidents in the transportation systems have caused significant loss of lives, waste [illegible] and loss in productivity. To improve the safety [illegible] efficiency of the transportation systems and [illegible] mobile services and applications for the traveling public, the project have been developed, which apply rapidly emerging information technologies in vehicles and transportation infrastructures. It is one of the most challenging and critical issues for the industries. The practical model of [illegible] proved to be very efficient, cheaper, and reliable system [illegible] security.

7.1 Future perspective of Work

- Remote door locking system to capture the thief.
- Accident detection and generating message which will inform family members about the location of accident.
- The owner can switch on the digital camera recorder to record the face of the thief. This will help in identifying and capturing the thief.

References

[1] Thuong Le [illegible] Vu Phung, Viet [illegible] Routing Tracking System for Mobile Vehicle [illegible] Large [illegible] IEEE 2010.

[2] Thuong [illegible] Vu Phung, Viet [illegible] Routing Tracking [illegible] for Mobile Vehicle [illegible] Large [illegible] IEEE July [illegible]

[3] Prawat [illegible]pa, Supaporn [illegible] and Adisorn Leelasantitham, "A Real Time Vehicle Tracking System Displayed on a Google Map-Based Website", http://department.utcc.ac.th/research/images/stories/5207003.pdf

[4] F. M. Franczyk, and J. D. Vanstone, "Vehicle warning system", Patent number: 7362239, Issue date: 22 Apr 2008.

[5] Guochang Xu, "GPS Theory, Algorithms and Applications" Springer, 2007.

[6] Silvan Mayer, Impact of GPRS on the Signaling of a GSM- based Network, Institute of Communication Networks and Computer Engineering, University of Stuttgart.

[7] Stéphane Piot, Security over GPRS, Master of Science

[8] Mohd Roshmanizam Bin Hamad Rodzi, "An Enhancement of Vehicle Security Alarm System via SMS, Bachelor of Science in Data Communication & Networking, MARA University of Technology, 2006

[9] Car Security and Tracking System with Position, Route, and Speed Calculation, EDP Topic VG06, 2011

[10] Will Jenkins ,Real-time vehicle performance monitoring with data integrity, Mississippi State University