Internet of Things (IoT) Based Fire Alert Monitoring System for Car Parking

Anis Farihan Mat Raffei
Multimedia Computing & Computer Vision
Faculty of Computing
College of Computing and Applied Sciences
Universiti Malaysia Pahang
Lebuhraya Tun Razak,
26300 Gambang, Kuantan,
Pahang, Malaysia
e-mail: anisfarihan@ump.edu.my

Nur Syafiqah Awang
Multimedia Computing & Computer Vision
Faculty of Computing
College of Computing and Applied Sciences
Universiti Malaysia Pahang
Lebuhraya Tun Razak,
26300 Gambang, Kuantan,
Pahang, Malaysia

Nur Shamsiah Abdul Rahman
Information Systems
Faculty of Computing
College of Computing and Applied Sciences
Universiti Malaysia Pahang
Lebuhraya Tun Razak,
26300 Gambang, Kuantan,
Pahang, Malaysia

Nor Saradatul Akmar Zulkifli
Soft Computing & Intelligent System
Faculty of Computing
College of Computing and Applied Sciences
Universiti Malaysia Pahang
Lebuhraya Tun Razak,
26300 Gambang, Kuantan,
Pahang, Malaysia

***Abstract*— Safety is one of the important factors that should be considered either in the parking area, workplace, home area and so forth. In the university parking area, the students are unable to receive any information regarding a fire smoke or an accident near their vehicle. In addition, the parking safety also not assured due to the shortage of car superintendence and there is no any strict parking management by the security officer. Therefore, a fire smoke alert monitoring system in the university parking area is necessary in order to prevent any accidents that may cause property breakdown and loss of life as happens inside the university area. This system should be introduced since the existing parking is unsystematic and less efficient as it unable to response the complications that are regularly happen to the students because they do not receive any information regarding a fire smoke or an accident near their vehicle in the parking area. With this new system, a few advancements are implemented in order to help the students in various aspects by using multiple and distinct Arduino devices. Moreover, an android application is developed to facilitate the security officer in order to identify the car information that are involved in the accident that might be occur in the university parking area.**

Keywords-Internet of things (IoT); Arduino; GSM/GPRS, Smoke Sensors

I. INTRODUCTION

Fire can become a very serious threat to human life and property safety [7, 8]. In such situations, detecting the fire smoke in advance and alerting emergency's situation quickly would reduce losses of property and life [9, 10]. An IoT based fire smoke alert monitoring system provides the benefit of monitoring the area from a distant location and taking immediate action based on message received compared to manual system [9]. This system can be monitored locally or remotely as appropriate.

The existing systems have been developed in various ways using technologies of wireless sensor networks [9], ethernet, image processing and other digital communication technologies. Reddy and Rao [9] proposed a fire accident and prevention monitoring system using wireless system application and android application. The system required prerequisites value for the temperature values and sending alert message via GSM/GPRS. Jaiswal et al. [8] proposed a real-time fire detection through sensor and sending location to the cloud that enable the administrator will receive various alerts regarding the fire. The system can detect smoke, flame and temperature of the affected areas. Suresh et al. [7] proposed a fire monitoring and warning system for home using Arduino Uno R3 and sending the message to property owner via GSM.

There are several aspects that need to be considered when developing the fire smoke alert monitoring system such as complexity, compactness, non-standalone, cost effective and redundancy of components. So, there is need for developing a system that is reliable and responsive as well as simple, easily implementable and cost effective. Therefore, as a precautionary measure, car parking fire smoke alert monitoring system will be developed and implemented in the parking area of university in order to diminish any accidents that may result in property breakdown and loss of life. Besides, due to the limitation number of car superintendent and security camera coverage in the parking area, students or

Authorized licensed use limited to: Universiti Malaysia Pahang. Downloaded on June 16,2020 at 06:48:15 UTC from IEEE Xplore. Restrictions apply.

staffs are unable to receive any information regarding fire or accident near their vehicle.

The proposed system is called as car parking fire smoke alert monitoring system using Arduino and android application. The main purpose of this system is to generate and establish a new car parking system in the university area. This system should be introduced since the existing parking is unsystematic and less efficient as it unable to resolve the complications that are regularly happen to the students. The main objective of this study is to develop a low-cost alert monitoring system for fire smoke using internet of things (IoTs). This system tracks and traces the fire smoke in the university parking area and it will inform the users by generating the fire smoke information to all students by using a multiple and distinct Arduino devices. There are seven main functions of the proposed system which are including detect fire smoke sensitivity, display fire smoke information, generate fire smoke alarm, control parking entrance, register student information, view student information and search student information.

The remainder of this report is organized into four (4) parts. Section II presents the methodology used in this work and Section III provides a detailed explanation of results and discussion. The final section of this report concludes the paper.

II. METHODOLOGY

The proposed system was developed using Agile development model. The agile development model is one of the methodologies that accentuate a continuous requirement collection in order to generate a system or product that is basically developed from the initial prototype and a successful clarification [11]. This methodology allows the developer to move from one phase to another phase and goes back to the previous phase. There are four phases for this methodology: (i) requirements; (ii) architecture and design; (iii) development; and (iv) test and feedback. The agile methodology phase is illustrated in Figure 1.

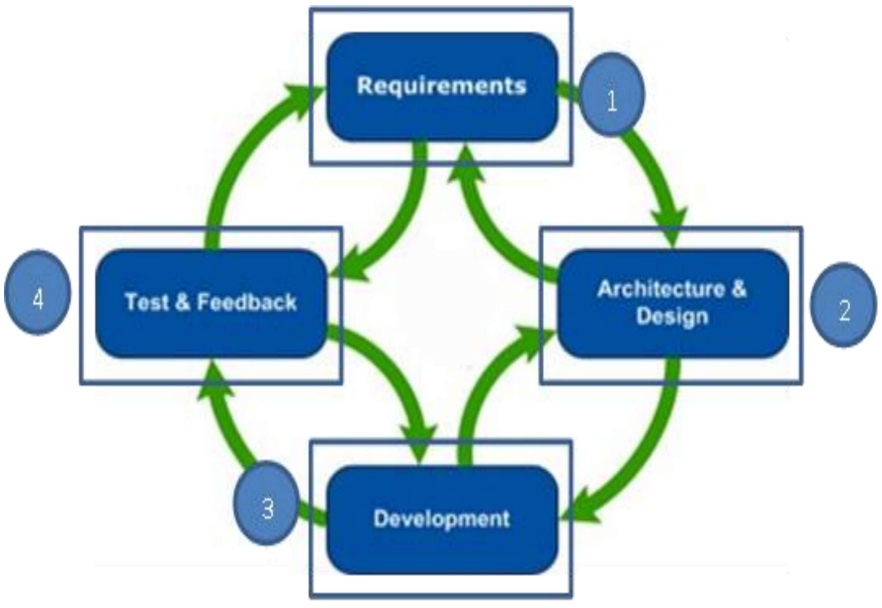

Figure 1. The Agile Methodology Phase.

A. Phase 1: Requirements

In this phase, all basic system requirements are gathered and analyzed as it is a continuous process in order to make the system work. This phase starts with classifying all functional and non-functional of system requirements. All requirements are converged based on user's reconciliation and identical application that already available on the market. Then, it will be categorized according to the application functionality itself and the target user for the application that will be develop. Figure 2 shows the general architecture of this proposed system. While Figure 3 present the flowchart of the proposed system.

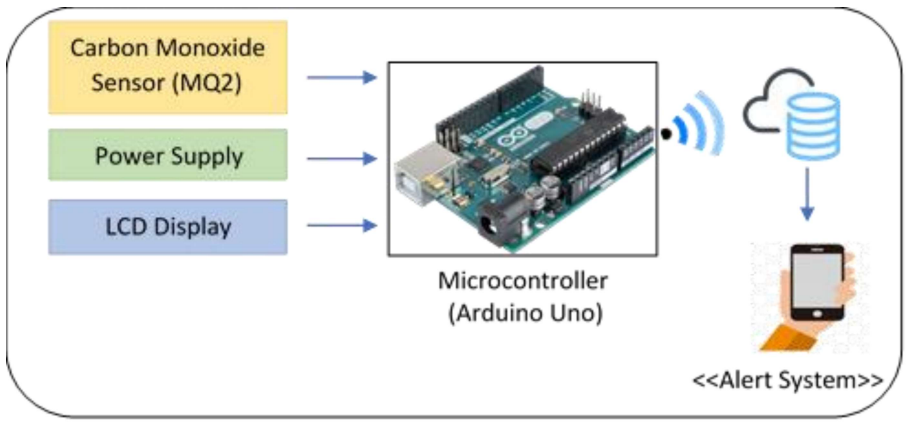

Figure 2. General Architecture of The Proposed System.

i. Data Requirement

The MQ-2 natural gas smoke sensor is attached to the Arduino Uno board and this sensor provide the input for the proposed system. The output of the system can be seen through the buzzer for red alert notification.

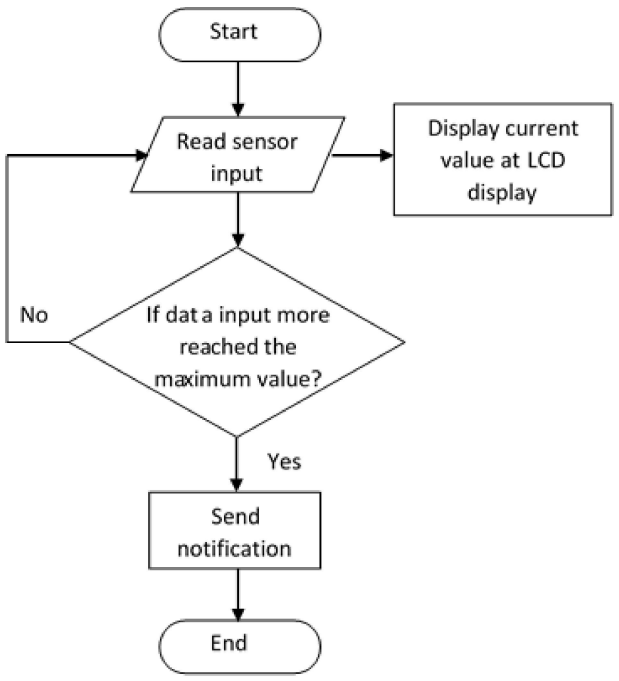

Figure 3. Flowchart of The Proposed System.

ii. Software Requirement

Arduino IDE and C programming language are used to program the proposed system.

iii. Hardware Requirement

Table I summarizes the hardware requirement for the proposed system and Figure 4 presents the connectivity of sensor in the proposed system.

Authorized licensed use limited to: Universiti Malaysia Pahang. Downloaded on June 16,2020 at 06:48:15 UTC from IEEE Xplore. Restrictions apply.

TABLE I. HARDWARE REQUIREMENT

Hardware	Specification	Purpose
Arduino Uno Board	Microcontroller board based on ATmega328P, consists of 14 digital input/output pins	To support the microcontroller as it contains all needed components.
MQ-2 Natural Gas Smoke Sensor	Power supply of 5V, high sensitivity to CH4, natural gas and small sensitivity to alcohol and smoke	To detect CH4, natural gas, LNG and to avoid exposure to the alcohol, cooking fumes and cigarette smoke.
Tower Pro 9g SG90 Plastic Gear Micro Servo Motor	Operating speed is up to 0.1sec/60 degree (4.8v)	To make a device move and rotate up to 180 degrees.
5V Piezo Buzzer 3-24DC	The rated current is less than 35mA	To generate a sound based on the Arduino programming.
16 x 2 LCD Display	16 characters by 2 lines LCD	To display the information on screen.
Potentiometer/ Variable Resistor (500 Ohm)	Consists of 500 Ohm resistance	To adjust the LCD display brightness and transparency.
Jumper Wires	Flexible jumpers, 150mm with male connectors on the end	To make a connection between Arduino's header pins and items on breadboard.
Large Breadboard	Consists two power rails (for both power and ground connections)	To add additional circuitry to Arduino.
USB Cable	Standard A-B USB cable	To make a connection between Arduino and the computer.

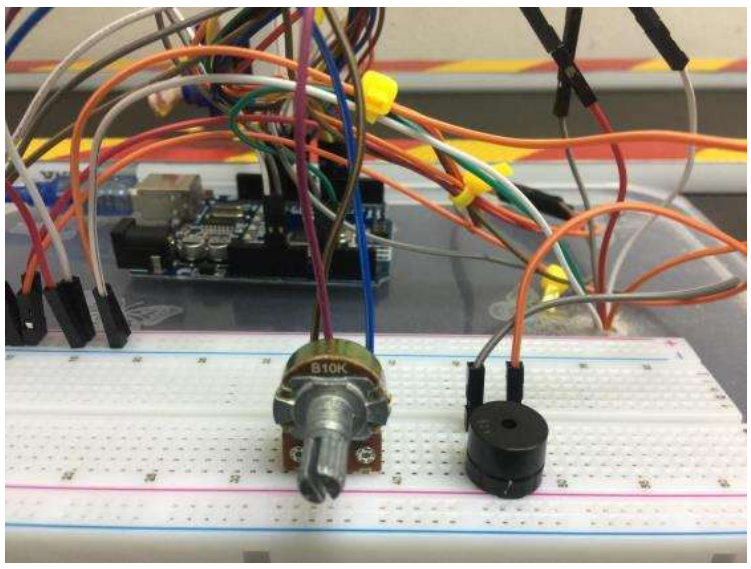

Figure 4. Connectivity of sensor.

B. *Phase 2: Architecture and Design*

After completing all basic requirement systems, a system architecture is designed using a prototype. In this phase, the system interface will be design and this process permits the system developer to attain the main idea on how the system architecture will be created. Additionally, the system developer also able to produce and formulate the relevant source code for each functionality of the created interface and directly it will guide the developer in selecting the suitable hardware and software requirement that are required during the overall system architecture development activity. There are a few aspects that should be considered during the system development which are including reliability, compatibility, security and robustness.

C. *Phase 3: Development*

In this phase, the actual system source code will be implemented into the selected software. The source code implementation is based on the system architecture and design that has been determined in the preceding phase of agile methodology. All of system functionality will be converted into the programming language. Development phase is the most important part as it will determine whether the system is satisfying the requirement or not.

D. *Phase 4: Test and Feedback*

There are several tests that will be performed during the test and feedback phase in order to discover any defect or error in the system. Test will be performed in the real environment by using a simulator. The system developer can return to the preceding phase, which is the development phase if there is any complication occurs during the test activity as this process is allowed in the agile development methodology. Subsequently, the system will be run by the several target users if there are no defects in the system in order to obtain the users' feedback for the further enhancement and improvement before the final product is released.

III. RESULT AND DISCUSSION

Figure 5 displays the first function of this system which is detect fire smoke sensitivity. This function allows the fire smoke alert monitoring system to detect the fire smoke sensitivity by tracking the smoke sensitivity value by using Arduino MQ-2 natural gas smoke sensor. Then, the reading of fire smoke sensitivity will be displayed on the LCD. The second function of this system as shown in Figure 6 displays the fire smoke information which the location and sensitivity of fire smoke are presented. The buzzer will generate a high frequency alarm since the fire smoke sensitivity value higher than fire smoke threshold value.

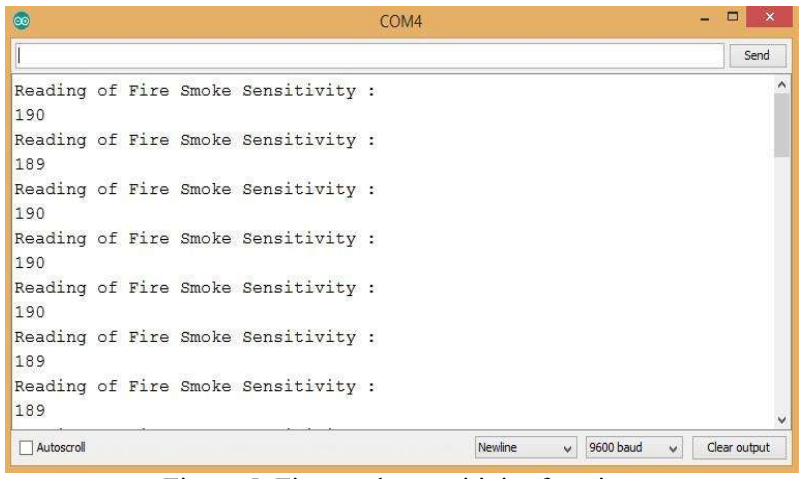

Figure 5. Fire smoke sensitivity function.

Authorized licensed use limited to: Universiti Malaysia Pahang. Downloaded on June 16,2020 at 06:48:15 UTC from IEEE Xplore. Restrictions apply.

Figure 6. Generate fire smoke alarm function.

IV. CONCLUSION

The car parking fire smoke alert monitoring system is developed in order to generate a more systematic and efficient parking system by using Arduino and android application. This system that able to track and trace the fire smoke in the parking area by processing the smoke sensitivity value that are taken by the MQ-2 natural gas smoke sensor. Then, this prototype system will notify the student by generating fire smoke information by using a multiple and distinct Arduino devices. Moreover, the student also needs to register their information by using an android application and the information will be stored into the database. This IoT system is easy to install and maintain as it requires very low technical skills and knowledge for device handling.

ACKNOWLEDGMENT

This research was funded by the UMP Research Grant Scheme (RDU180378).

REFERENCES

[1] S. Ruengittinun, J. Paisalwongcharoen, and C. Watcharajindasakul, "IoT solution for bad habid of car security," International Conference on Ubi-media Computing and Workshops (Ubi-Media), Aug. 2017, doi: 10.1109/UMEDIA.2017.8074145.

[2] S. Dhingra, R. B. Madda, A. H. Gandomi, R. Patan, and M. Daneshmad, "Internet of things mobile-air pollution monitoring system (IoT-Mobair)", IEEE Internet of Things Journal, vol. 6(3), pp. 5577-5584, June 2019.

[3] J. Gowthamy, C. R. Reddy, P. Meher, S. Shrivastava, and G. Kumar, "Smart water monitoring system using IoT," International Research Journal of Engineering and Technology, vol. 5(10), pp. 1170-1173, October 2018.

[4] M. R. Rahman, J. Ali, M. N. Kabir, and S. Azad," A performance investigation on IoT enabled intra-vehicular wireless sensor networks," International Journal of Automative and Mechanical Engineering, vol. 14(1), pp. 3970-3984, March 2017.

[5] S. F. Kamarulzaman and M. H. Alsibai,"Time-change-fuzzy-based intelligent vehicle control system for safe emergency lane transition during driver lethargic state," Advanced Science Letters, vol.24(10), pp. 7554-7558(5), October 2018.

[6] U. W. Badarudin, W. I. S. W. Din, Y. A. Prasetyo, Z. Musa, and S. Kassim, "Internet of Things: An Implementation and Its Challenges in Malaysia," International Journal on Advanced Science, Engineering and Information Technology, vol. 8(6), pp. 2641-2647.

[7] S. Suresh, S. Yuthika, and G. A. Vardhini, "Home based fire monitoring and warning system," International Conference on ICT in Business Industry & Government (ICTBIG), Nov. 2016, doi: 10.1109/ICTBIG.2016.7892664.

[8] A. A. Jaiswal, D. Waghaye, S. Balki, T. Girhepunje and N. Dakhale, "I.O.T and A.I. enabled fire detecting moving BOT," International Journal for Research in Applied Science & Engineering Technology, vol. 6(IV), pp. 134-141, April 2018.

[9] M. S. Reddy, and K. R. Rao, "Fire accident detection and prevention monitoring system using wireless sensor network enabled android application," Indian Journal of Science and Technology, vol. 9(17), pp. 1-5, May 2016.

[10] S. Suresh., S. Yuthika, and G. A.Vardhini, "Home based fire monitoring and warning system," International Conference on ICT in Business & Government, Nov. 2016, doi: 10.1109/ICTBIG.2016.7892664.

[11] S. Soundararajan, J. D. Arthur, and O. Balci, "A methodology for assessing agile software developemtn methods," Agile Conference, Aug 2012, doi: 10.1109/Agile.2012.24.

Authorized licensed use limited to: Universiti Malaysia Pahang. Downloaded on June 16,2020 at 06:48:15 UTC from IEEE Xplore. Restrictions apply.