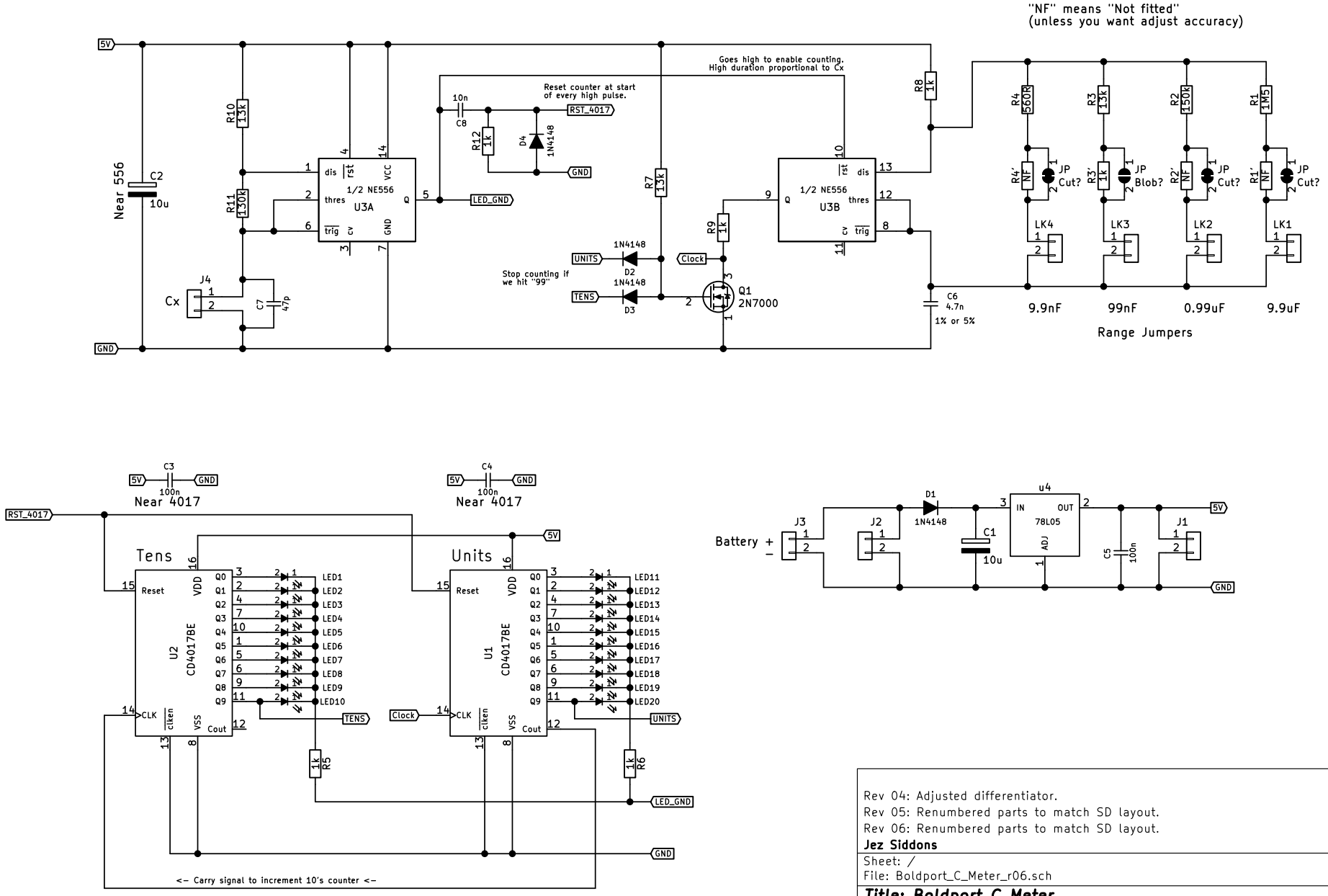

Rev 04: Adjusted differentiator.
Rev 05: Renumbered parts to match SD layout.
Rev 06: Renumbered parts to match SD layout.

Jez Siddons

Sheet: /
File: Boldport_C_Meter_r06.sch

Title: Boldport C Meter

Size: A4	Date: 2018-09-30	**Rev: 6**
KiCad E.D.A. kicad (5.0.0)		Id: 1/1