Manheim Post Sale Inspection Checklist

10:30:08

Vehicle Information

Run#: 2009-026-12-0022
Yr/Mk: 2001 LEXUS
Model: RX300 AWD
Color: SILVER
Miles: 113,205
VIN: JTJHF10UX10183755
Lights: YLW/BLU
Opts: ENG: 6G R: C TRN: A PS: X PB: X AC: X EW: X ES: X TOP: X CC: X EL: X INT: L CLR: BLA 4X4: A TL: X H/C: 2

Customer Information

Dealership 5230120 MAKMAL NORTH AMERICA CO
Contact: 01 - VALENTINA SHEVCHIK
Telephone 416-834-9505 Signer: 416-834-9505
Fax: 647-435-5876 **CASH**
Info:
Announce MO
Remarks:

Notes

** SOLD ON SIMULCAST **

Vehicle Inspection — POST SALE INSPECTION

OK	N/A	Concern	Check Points	Comment
✓			ODOMETER	
✓			ENGINE	
✓	N/A		4X4 SYSTEM OPERABLE	
✓			ABS/BRAKES	
✓			EMISSION CONTROL EQUIPMENT	
✓			A/C COMPRESSOR ENGAGEMENT	
✓			SRS (Supp Restraint System/Air	
✓			TRANSMISSION	
✓			ACCESSORIES (Electrical)	
✓			PAINTWORK INSPECTED	
✓			FLOOD DAMAGE	
✓			FRAME OR UNIBODY STRUCTURAL DA	

REQUESTED

7-DAY GUARANTEE

Arbitratable Items Found? ☐ Yes ☑ No Rodney F.

Frame Check

OK	Concern	Comment

General Comments:

Reconditioning Recommendations

Frame Inspection

☐ No Apparent Visible Damage ☐ Frame / Structural Damage (see below)

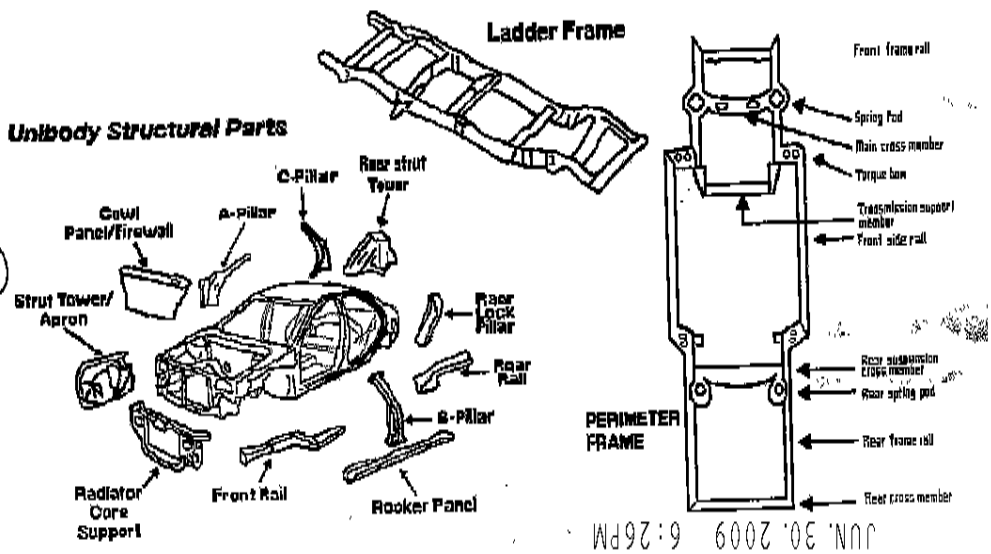

Requested		Completed	
		Inspector:	
Date:	6/30/2009	Date:	
Time:	10:30:08	Time:	

Seller Information

5071160 JOHNSON LEXUS OF RALEIGH
Phn: 919-877-1800 Fax: 919-877-1939