POST-SALE INSPECTION

Pass: [X] Yes [ ] No [X] **7-Day** [ ] **14-Day**

Run #: 26·2·540 Work Order #: — Customer: Makmal North YR/Make/Model: 01 BMW X5 4.4.

Odometer IN: 74134 Odometer OUT: 74137 Functions Properly: [X] YES [ ] NO Test Drive: [X] YES [ ] NO

Simulcast Sale: [X] YES [ ] NO VIN: 1LH26440 Sale Date: 6/25/08 Inspection Date: 6/25/08 Type of Inspection: [ ] FRAME [ ] MECH [X] FULL

ECR Verified: [ ] YES [X] NO Top Side Inspector #: HC Frame Inspector #: RE/DE Test Drive Inspector #: TM

MECHANICAL INSPECTION

Defects must be singularly $400 or more to repair	PASS	FAIL
ENGINE	X	
4X4 SYSTEM OPERABLE	X	
ABS	X	
EMISSION CONTROL EQUIPMENT	X	
AIR CONDITIONING SYSTEM (Calendar Year Model or Newer) n/a		

MECHANICAL INSPECTION

Defects must be singularly $400 or more to repair	PASS	FAIL
SRS (Supplemental Restraint System/Air Bags)	X	
TRANSMISSION	X	
ACCESSORIES (Electrical)	X	
PAINTWORK TO 3 PANELS OR MORE (Current Year or Newer) n/a		
FLOOD DAMAGE	X	

FRAME INSPECTION

	PASS	FAIL
FRAME OR UNIBODY STRUCTURAL DAMAGE	X	

Additional Comments: (not arbitrable)
Both CV boots bad
R/S outer mirror broken
Coolant reserve tank cracked & leaking

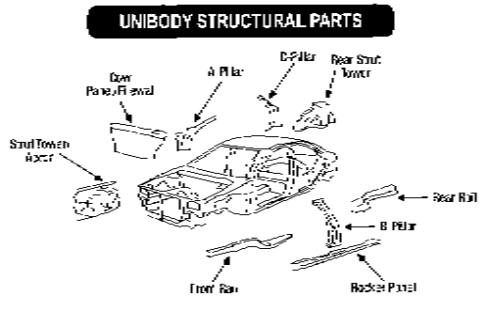

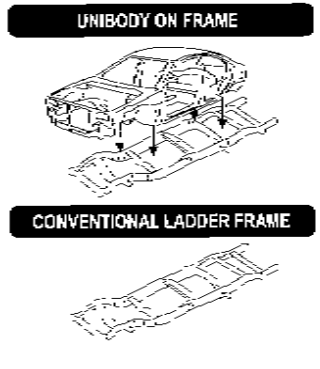

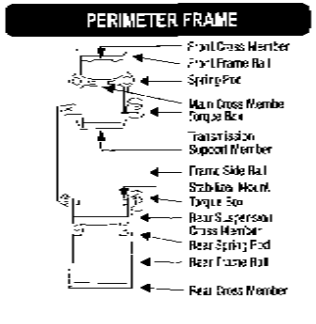

7 15 07