Manheim Post Sale Inspection Checklist

15:39:17 9:50AM

Vehicle Information

R. #: 2008-044-92-0057
Yr/Mk: 2003 BMW
Model: X5 3.0L
Color: BLUE
Miles: 35,618
VIN: 5UXFA53593LV89322
Lights: GRN/BLU

Customer Information

Dealership 5230120 MAKMAL NORTH AMERICA CO
Contact:
Telephone 416-834-9505
Fax: 647-435-5876 **CASH** 25
Info:
Announce T/A
Remarks: From DX: dir#: 5043332; 0000-000-00-0000

Notes

Sale price: $17,000
Work order: 4530942

Opts: ENG: NON R: C TRN: A PS: X PB: X AC: Y EW: X ES: X TOP: SR CC: X EL: X INT: L CLR: GRY 4X4: A TL: X SRS: D SI: F DF: X H/C: 2

Vehicle Inspection POST SALE INSPECTION - FULL V REQUESTED 7-DAY GUARANTEE

OK	N/A	Concern	Check Points	Comment
✓			ODOMETER 35,634	
✓			ELECTRICAL ACCESSORIES	
✓			ENGINE	
✓			TRANSMISSION	
✓			DIFFERENTIAL/AXLES	
✓			TRANSFER (4X4, AWD)	
✓			SRS (SUPL RESTRAINT SYSTEM)	
	✓		A/C SYSTEM(CALENDAR YR OR NEWE	
✓			ABS	
✓			FRAME/UNIBODY UPPER INSP 21	
	✓		PAINT WORK 3 PNLS OR MORE(CURR	
✓			EMISSION CONTROL EQUIPMENT	
✓			DRIPPING OIL LEAK	
✓			FLOOD DAMAGE	
✓			OTHER	Bad Brake light On
			FRAME/UNIBODY LOWER INSP 44	Replace Brake Pad Message Display. NO-ARB

Arbitratable Items Found? ☐ Yes ☑ No

Frame Check

OK	Concern	Comment
✓		

General Comments:

Frame Inspection

☑ No Apparent Visible Damage ☐ Frame / Structural Damage (see below)

Reconditioning Recommendations

Requested
Date: 7/17/2008
Time: 15:39:17

Completed
Inspector:
Date:
Time:

Seller Information
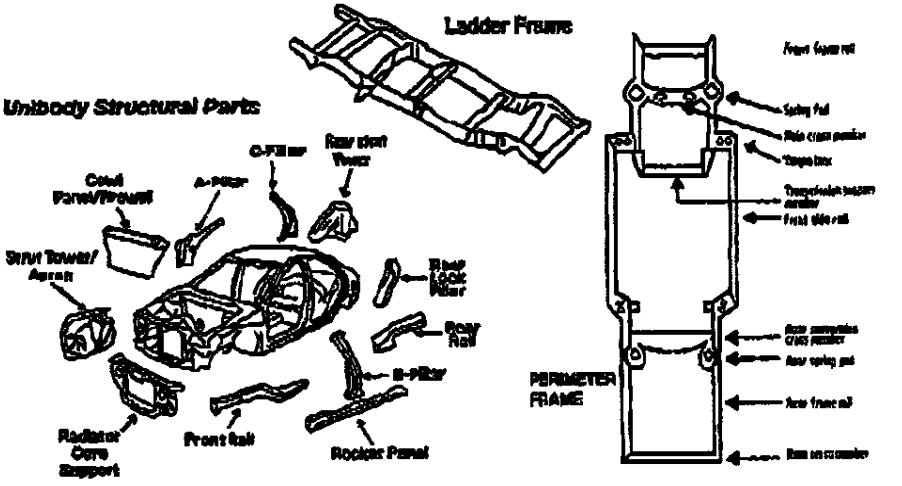
5043332 ALL AUTO IMPORTS
Phn: 301-526-9698 Fax: 301-977-6781