Manheim Post Sale Inspection Checklist

16:22:24

K.K.

Vehicle Information

Run#: 2012-002-07-0063
Yr/Mk: 2005 LEXUS
Model: GX470
Color: SILVER
Miles: 142,322
VIN: JTJBT20X150087792
Lights: YLW/GRN
Opts: ENG: 8G R: F TRN: A 4X4: X H/C: 2

Customer Information

Dealership 5230120 MAKMAL NORTH AMERICA CO
Contact: 01 - VALENTINA SHEVCHIK
Telephone 416-840-5849 Signer: 416-834-9505
Fax: 647-435-5876 **CASH**
Info:
Announce GUAR OVER100K NAV DVD 5ST 6HR
Remarks: VSC OFF LT ON

Notes

1/10PRE+

PASS

** SOLD ON SIMULCAST **

Vehicle Inspection **FRAME CHECK** **REQUESTED** **7-DAY GUARANTEE**

OK	N/A	Concern	Check Points	Comment
✓			FRAME OR UNIBODY STRUCTURAL DA	

Arbitratable Items Found? ☐ Yes ☑ No

Frame Check

OK ✓ Concern ☐ Comment N.V.F.

General Comments:

Frame Inspection

☑ No Apparent Visible Damage ☐ Frame / Structural Damage (see below)

Reconditioning Recommendations

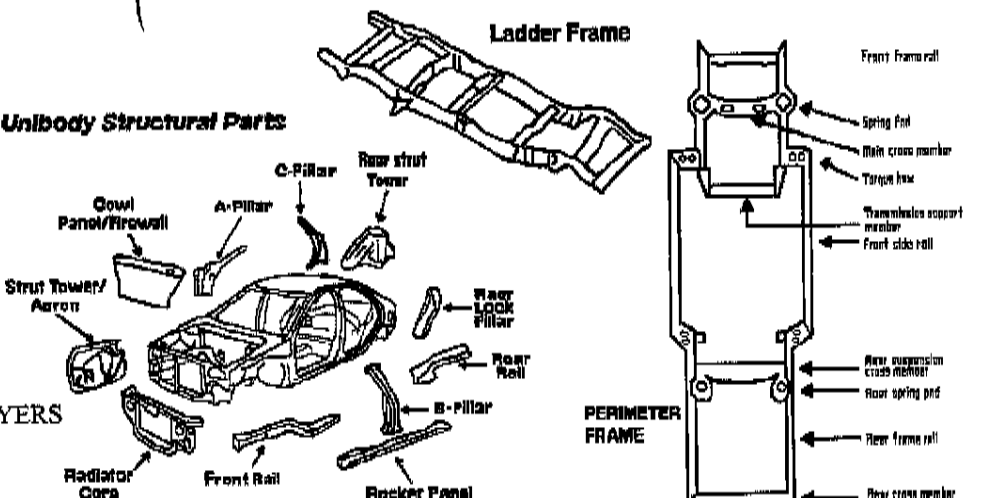

Requested
Date: 1/11/2012
Time: 16:22:24

Completed
Inspector: SR
Date:
Time:

Seller Information

5110095 HUNTINGTON BEACH AUTO BUYERS
Phn: 714-895-3445 Fax: 714-898-6153