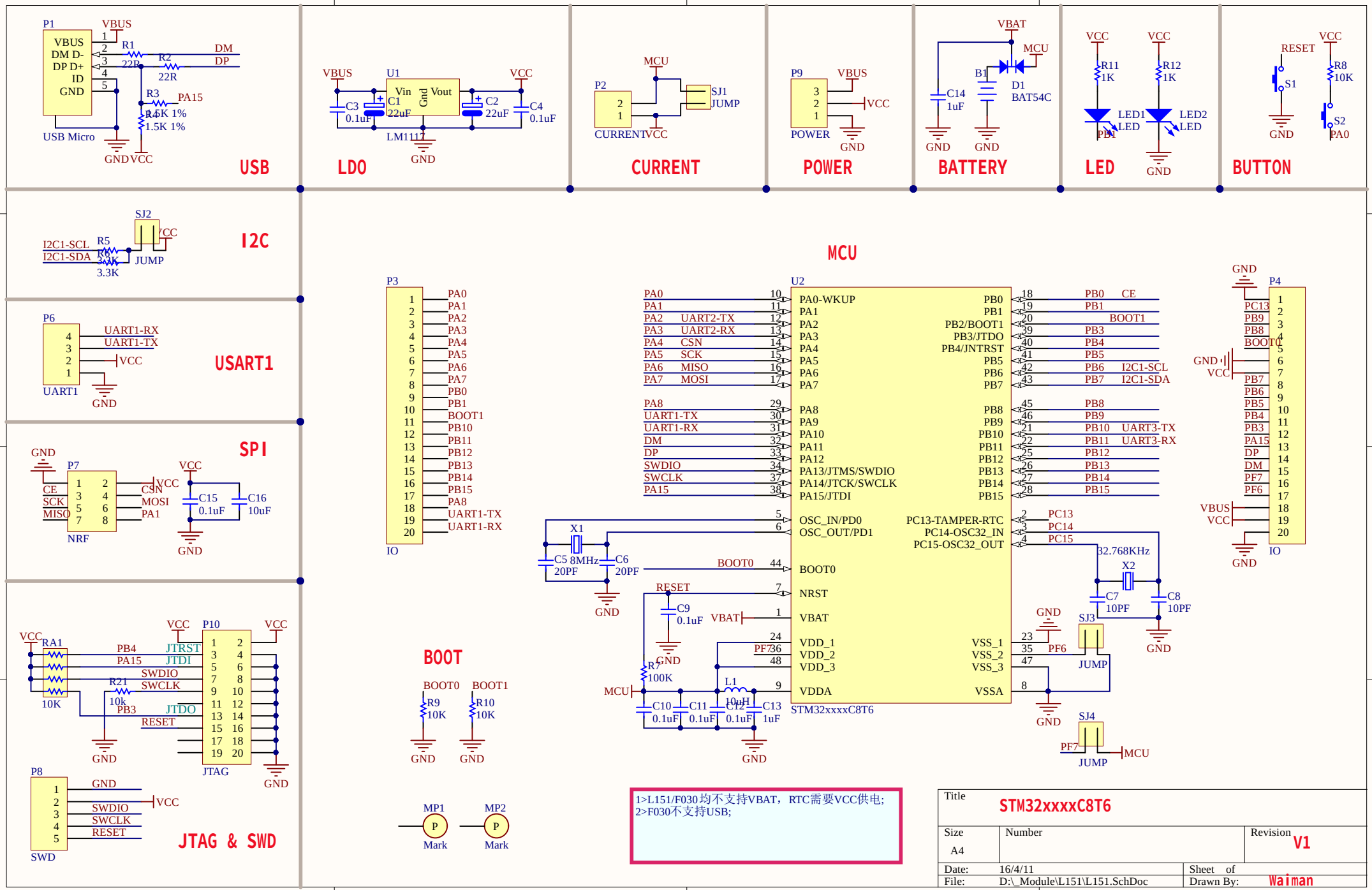
USB
P1
VBUS
DM D-
DP D+
ID
GND
USB Micro
R1 22R
R2 22R
R3 1.5K 1%
R4 1.5K 1%
PA15
DM
DP
LDO
U1
Vin
Gnd
Vout
LM1117
C1 22uF
C2 22uF
C3 0.1uF
C4 0.1uF
CURRENT
P2
CURRENT
SJ1 JUMP
POWER
P9
POWER
BATTERY
VBAT
MCU
B1
D1 BAT54C
C14 1uF
LED
R11 1K
R12 1K
LED1 LED
LED2 LED
PB1
BUTTON
RESET
S1
S2
R8 10K
PA0
I2C
SJ2
JUMP
I2C1-SCL
I2C1-SDA
R5 3.3K
R6 3.3K
USART1
P6
UART1
UART1-RX
UART1-TX
SPI
P7
NRF
CE
SCK
MISO
CSN
MOSI
PA1
C15 0.1uF
C16 10uF
JTAG & SWD
P10
JTAG
RA1 10K
R21 10k
PB4
PA15
PB3
JTRST
JTDI
SWDIO
SWCLK
JTDO
RESET
P8
SWD
SWDIO
SWCLK
RESET
BOOT
BOOT0
BOOT1
R9 10K
R10 10K
MP1
MP2
Mark
MCU
P3
IO
PA0
PA1
PA2 UART2-TX
PA3 UART2-RX
PA4 CSN
PA5 SCK
PA6 MISO
PA7 MOSI
PB0
PB1
BOOT1
PB10
PB11
PB12
PB13
PB14
PB15
PA8
UART1-TX
UART1-RX
U2
STM32xxxxC8T6
PA0-WKUP
PB2/BOOT1
PB3/JTDO
PB4/JNTRST
PA13/JTMS/SWDIO
PA14/JTCK/SWCLK
PA15/JTDI
OSC_IN/PD0
OSC_OUT/PD1
PC13-TAMPER-RTC
PC14-OSC32_IN
PC15-OSC32_OUT
BOOT0
NRST
VBAT
VDD_1
VDD_2
VDD_3
VDDA
VSS_1
VSS_2
VSS_3
VSSA
PB0 CE
PB3
PB4
PB5
PB6 I2C1-SCL
PB7 I2C1-SDA
PB8
PB9
PB10 UART3-TX
PB11 UART3-RX
PB12
PB13
PB14
PB15
PC13
PC14
PC15
X1 8MHz
C5 20PF
C6 20PF
C9 0.1uF
R7 100K
L1 10uH
C10 0.1uF
C11 0.1uF
C12 0.1uF
C13 1uF
32.768KHz
X2
C7 10PF
C8 10PF
SJ3 JUMP
SJ4 JUMP
PF6
PF7
P4
IO
PC13
PB9
PB8
BOOT0
PB7
PB6
PB5
PB4
PB3
PA15
DP
DM
PF7
PF6
VBUS
VCC
GND
1>L151/F030均不支持VBAT，RTC需要VCC供电;
2>F030不支持USB;
Title
STM32xxxxC8T6
Size
A4
Number
Revision
V1
Date: 16/4/11
File: D:_Module\L151\L151.SchDoc
Sheet of
Drawn By: Waiman