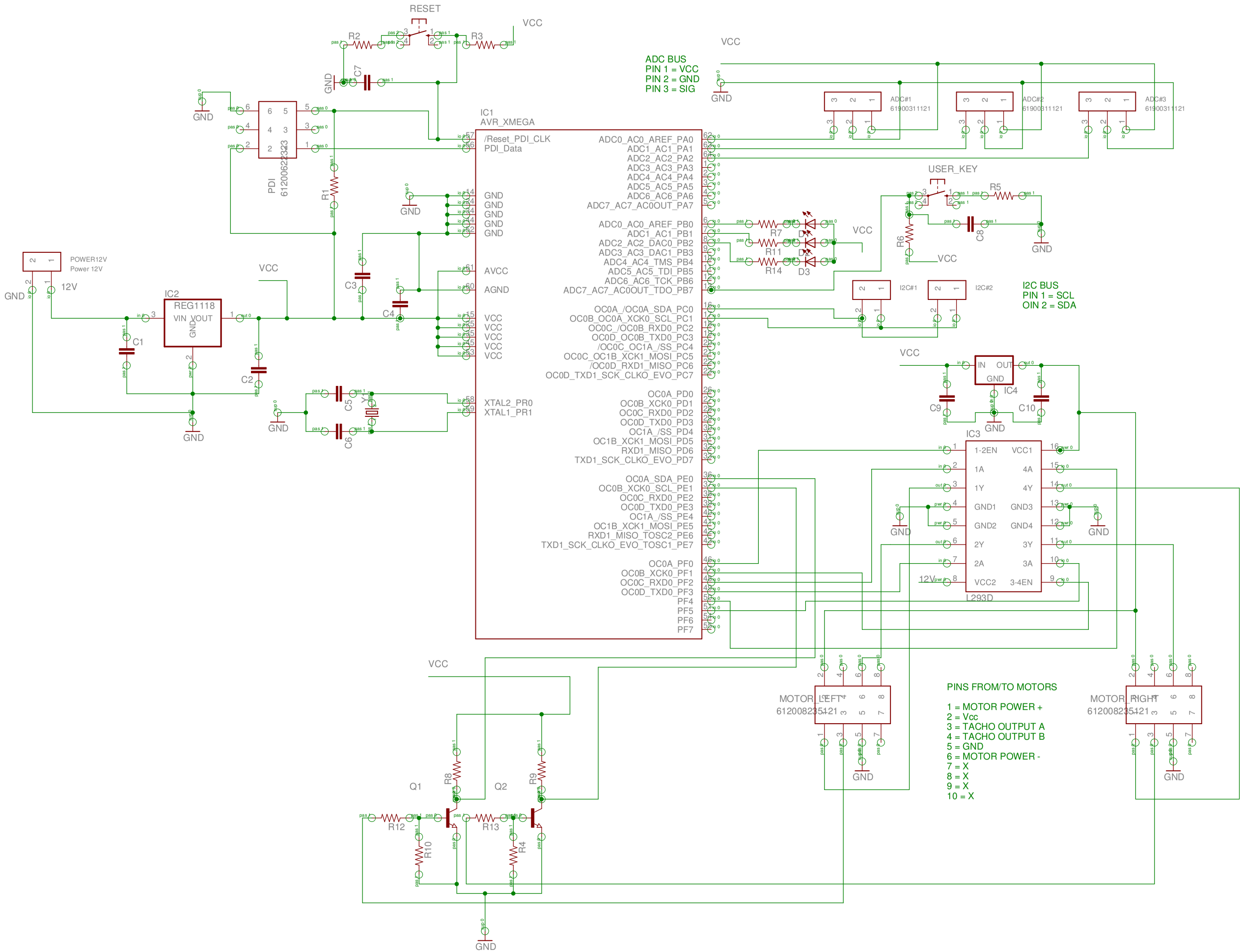
RESET
VCC
R2
R3
C7
GND
PDI
61200622323
R1
IC1
AVR_XMEGA
/Reset_PDI_CLK
PDI_Data
GND
AVCC
AGND
VCC
XTAL2_PR0
XTAL1_PR1
ADC0_AC0_AREF_PA0
ADC1_AC1_PA1
ADC2_AC2_PA2
ADC3_AC3_PA3
ADC4_AC4_PA4
ADC5_AC5_PA5
ADC6_AC6_PA6
ADC7_AC7_AC0OUT_PA7
ADC0_AC0_AREF_PB0
ADC1_AC1_PB1
ADC2_AC2_DAC0_PB2
ADC3_AC3_DAC1_PB3
ADC4_AC4_TMS_PB4
ADC5_AC5_TDI_PB5
ADC6_AC6_TCK_PB6
ADC7_AC7_AC0OUT_TDO_PB7
OC0A_/OC0A_SDA_PC0
OC0B_OC0A_XCK0_SCL_PC1
OC0C_/OC0B_RXD0_PC2
OC0D_OC0B_TXD0_PC3
/OC0C_OC1A_/SS_PC4
OC0C_OC1B_XCK1_MOSI_PC5
/OC0D_RXD1_MISO_PC6
OC0D_TXD1_SCK_CLKO_EVO_PC7
OC0A_PD0
OC0B_XCK0_PD1
OC0C_RXD0_PD2
OC0D_TXD0_PD3
OC1A_/SS_PD4
OC1B_XCK1_MOSI_PD5
RXD1_MISO_PD6
TXD1_SCK_CLKO_EVO_PD7
OC0A_SDA_PE0
OC0B_XCK0_SCL_PE1
OC0C_RXD0_PE2
OC0D_TXD0_PE3
OC1A_/SS_PE4
OC1B_XCK1_MOSI_PE5
RXD1_MISO_TOSC2_PE6
TXD1_SCK_CLKO_EVO_TOSC1_PE7
OC0A_PF0
OC0B_XCK0_PF1
OC0C_RXD0_PF2
OC0D_TXD0_PF3
PF4
PF5
PF6
PF7
POWER12V
Power 12V
12V
IC2
REG1118
VIN VOUT
GND
C1
C2
C3
C4
C5
C6
X1
ADC BUS
PIN 1 = VCC
PIN 2 = GND
PIN 3 = SIG
ADC#1
61900311121
ADC#2
61900311121
ADC#3
61900311121
USER_KEY
R5
R6
C8
R7
R11
R14
D1
D2
D3
I2C#1
I2C#2
I2C BUS
PIN 1 = SCL
OIN 2 = SDA
IC4
IN OUT
C9
C10
IC3
1-2EN
VCC1
1A
4A
1Y
4Y
GND1
GND3
GND2
GND4
2Y
3Y
2A
3A
VCC2
3-4EN
L293D
MOTOR_LEFT
612008235421
MOTOR_RIGHT
612008235421
PINS FROM/TO MOTORS
1 = MOTOR POWER +
2 = Vcc
3 = TACHO OUTPUT A
4 = TACHO OUTPUT B
5 = GND
6 = MOTOR POWER -
7 = X
8 = X
9 = X
10 = X
Q1
Q2
R8
R9
R12
R13
R10
R4