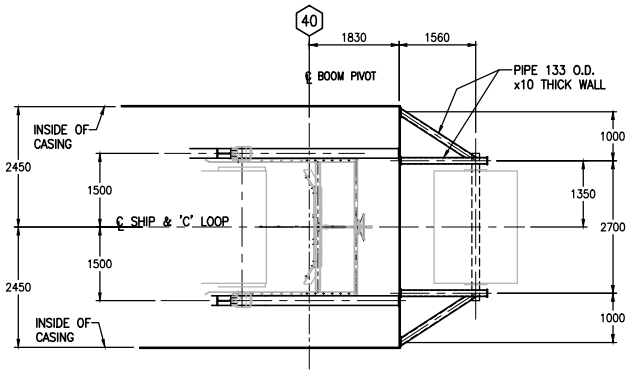

SECTION A–A

INSTALLATION NOTE:

THE REEL SUPPORT HAS BEEN DESIGNED TO ALLOW FOR INSTALLATION OF ONLY ONE BELT AT A TIME. ANY DEVIATION FROM THIS WILL RESULT IN SEVERE INJURY AND/OR DEATH TO PERSONNEL.

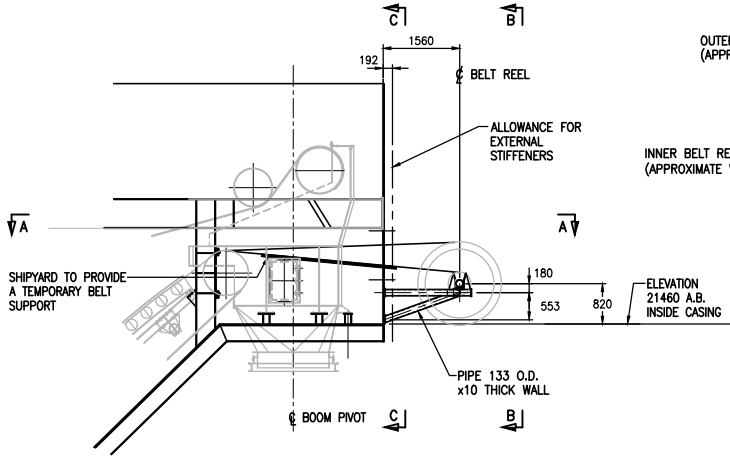

ELEVATION VIEW

(LOOKING TO PORT)

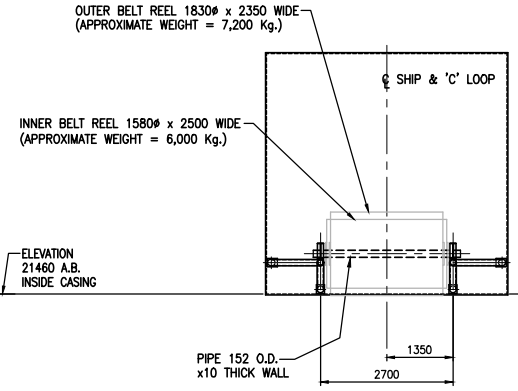

SECTION B–B

(LOOKING AFT)

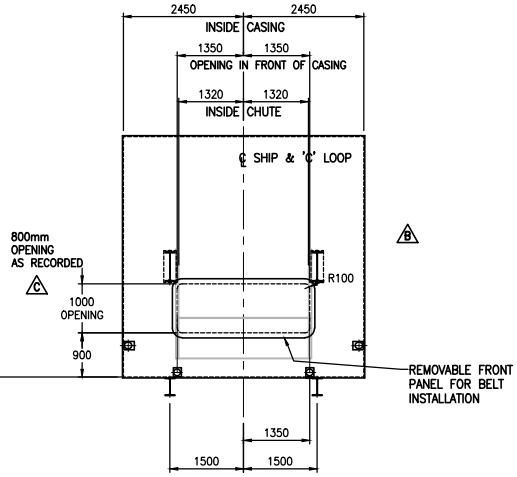

SECTION C–C

(LOOKING AFT)

NOTE!
THIS DRAWING IS PROVIDED AS A GUIDE ONLY FOR SHIPYARD FINAL DESIGN AND SUPPLY.

OWNER/OPERATOR: CSL GROUP

DRAWING NO.	REFERENCE	DRAWING NO.	REFERENCE	REV.	REVISION DESCRIPTION	BY	CHKD	DATE
18066–G–002	GENERAL NOTES							
18066–G–003	GENERAL NOTES							

REV.	REVISION DESCRIPTION	BY	CHKD	DATE
D	ISSUED AS RECORDED	JO	JAMS	NOV. 10/23
C	AS RECORDED DIMENSION ADDED	DTB	BPW	APR. 16/21
B	PICTURE UPDATED	WMW	BPW	JULY 17/20
A	ISSUED FOR INFORMATION	BLW	BPW	APRIL 7/20

THIRD ANGLE PROJECTION

CONFIDENTIALITY:
THIS DRAWING, IN DESIGN AND DETAIL, IS THE PROPERTY OF EMS-TECH INC. AND MUST NOT BE USED EXCEPT IN CONNECTION WITH EMS-TECH INC. WORK.
ALL RIGHTS OF DESIGN OR INVENTION ARE RESERVED.

SCALE: 1:50
DATE: APRIL 6, 2020
DRAWN BY: BLW
CHECKED BY: WMW/BPW

STATUS: AS RECORDED

PROJECT: 25,800 DWT GREAT LAKES NEW BUILD

EMS-TECH INC.®
mobile equipment and bulk material handling systems
BELLEVILLE – ONTARIO – CANADA
PHONE 613-966-6611 FAX 613-966-6710

DRAWING TITLE: PROPOSED ARRANGEMENT OF 'C' LOOP CONVEYOR BELT REEL

APPR'D	DRAWING NUMBER	REV.
	18066–G–305	D