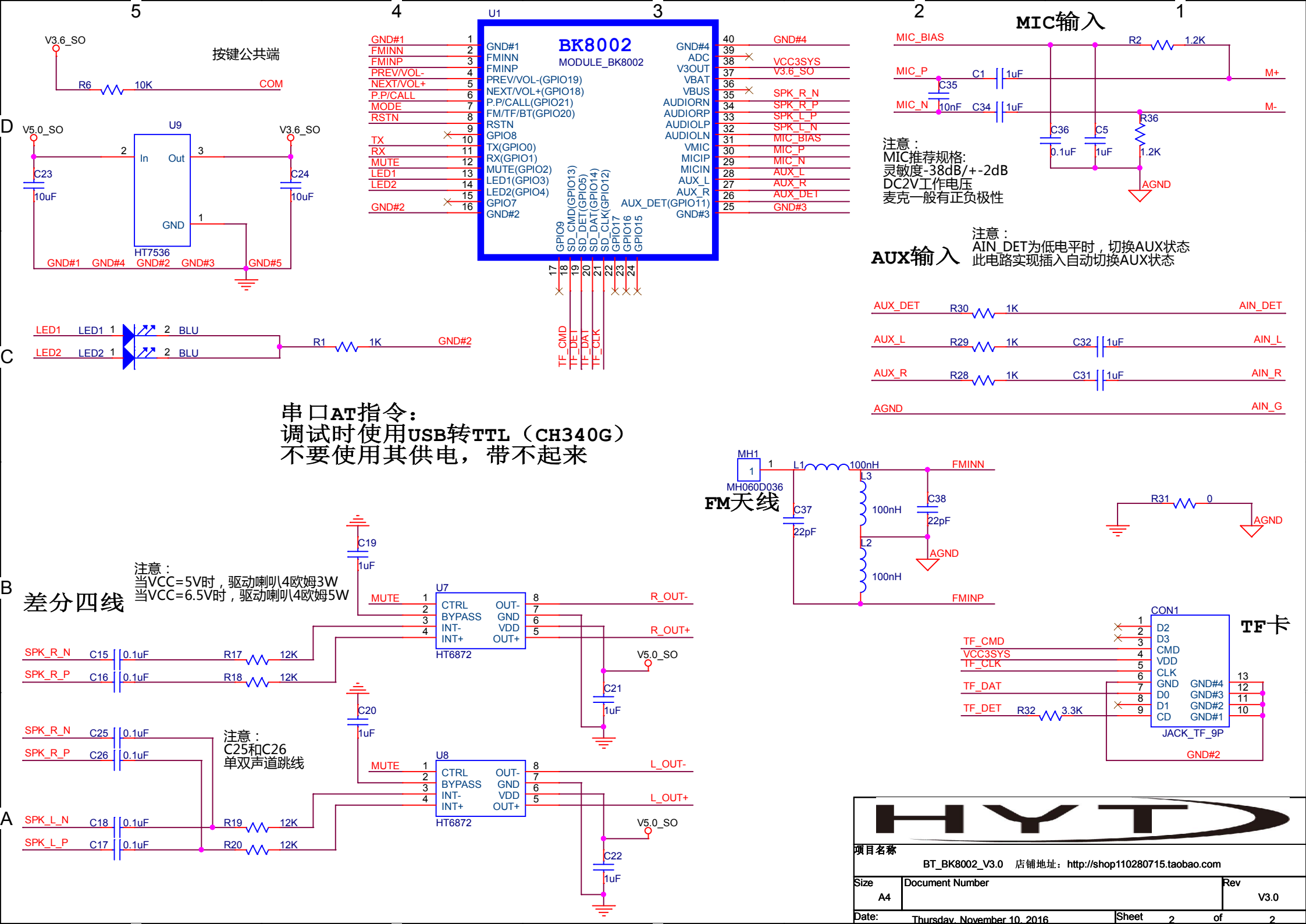
5
4
3
2
1
V3.6_SO
按键公共端
R6
10K
COM
U1
BK8002
MODULE_BK8002
GND#1
FMINN
FMINP
PREV/VOL-
NEXT/VOL+
P.P/CALL
MODE
RSTN
TX
RX
MUTE
LED1
LED2
GND#2
GND#1
FMINN
FMINP
PREV/VOL-(GPIO19)
NEXT/VOL+(GPIO18)
P.P/CALL(GPIO21)
FM/TF/BT(GPIO20)
RSTN
GPIO8
TX(GPIO0)
RX(GPIO1)
MUTE(GPIO2)
LED1(GPIO3)
LED2(GPIO4)
GPIO7
GND#2
GND#4
ADC
V3OUT
VBAT
VBUS
AUDIORN
AUDIORP
AUDIOLP
AUDIOLN
VMIC
MICIP
MICIN
AUX_L
AUX_R
AUX_DET(GPIO11)
GND#3
GND#4
VCC3SYS
V3.6_SO
SPK_R_N
SPK_R_P
SPK_L_P
SPK_L_N
MIC_BIAS
MIC_P
MIC_N
AUX_L
AUX_R
AUX_DET
GND#3
GPIO9
SD_CMD(GPIO13)
SD_DET(GPIO5)
SD_DAT(GPIO14)
SD_CLK(GPIO12)
GPIO17
GPIO16
GPIO15
TF_CMD
TF_DET
TF_DAT
TF_CLK
MIC输入
MIC_BIAS
R2
1.2K
MIC_P
C1
1uF
C35
10nF
MIC_N
C34
1uF
M+
M-
C36
0.1uF
C5
1uF
R36
1.2K
AGND
注意：
MIC推荐规格:
灵敏度-38dB/+-2dB
DC2V工作电压
麦克一般有正负极性
D
V5.0_SO
U9
In
Out
GND
HT7536
C23
10uF
C24
10uF
V3.6_SO
GND#1
GND#4
GND#2
GND#3
GND#5
C
LED1
LED2
BLU
R1
1K
GND#2
AUX输入
注意：
AIN_DET为低电平时，切换AUX状态
此电路实现插入自动切换AUX状态
AUX_DET
R30
1K
AIN_DET
AUX_L
R29
1K
C32
1uF
AIN_L
AUX_R
R28
1K
C31
1uF
AIN_R
AGND
AIN_G
串口AT指令:
调试时使用USB转TTL（CH340G）
不要使用其供电，带不起来
MH1
MH060D036
FM天线
L1
100nH
L3
100nH
L2
100nH
FMINN
FMINP
C37
22pF
C38
22pF
AGND
R31
0
AGND
B
差分四线
注意：
当VCC=5V时，驱动喇叭4欧姆3W
当VCC=6.5V时，驱动喇叭4欧姆5W
C19
1uF
U7
MUTE
CTRL
BYPASS
INT-
INT+
OUT-
GND
VDD
OUT+
HT6872
R_OUT-
R_OUT+
V5.0_SO
C21
1uF
SPK_R_N
C15
0.1uF
R17
12K
SPK_R_P
C16
0.1uF
R18
12K
C20
1uF
U8
L_OUT-
L_OUT+
V5.0_SO
C22
1uF
SPK_R_N
C25
0.1uF
SPK_R_P
C26
0.1uF
注意：
C25和C26
单双声道跳线
A
SPK_L_N
C18
0.1uF
R19
12K
SPK_L_P
C17
0.1uF
R20
12K
TF卡
CON1
D2
D3
CMD
VDD
CLK
GND
D0
D1
CD
GND#4
GND#3
GND#2
GND#1
JACK_TF_9P
TF_CMD
VCC3SYS
TF_CLK
TF_DAT
TF_DET
R32
3.3K
GND#2
项目名称
BT_BK8002_V3.0
店铺地址：http://shop110280715.taobao.com
Size
A4
Document Number
Rev
V3.0
Date:
Thursday, November 10, 2016
Sheet
2
of
2