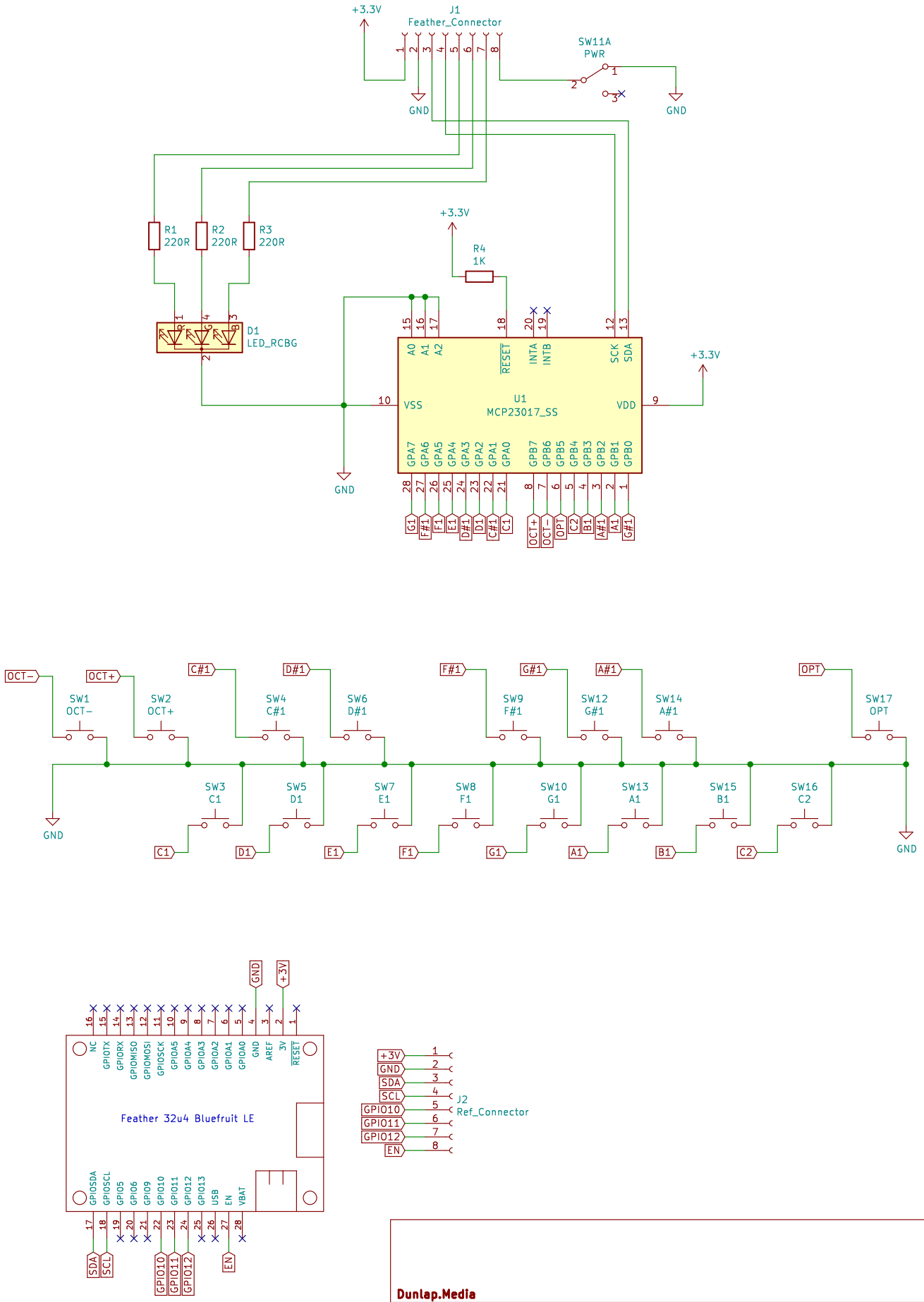

Dunlap.Media

Sheet: /

File: bluetoothMidiController.sch

Title: portaMid Bluetooth MIDI Controller

Size: A4	Date: 2019-03-08	**Rev: 2**
KiCad E.D.A. kicad (5.0.2)-1		Id: 1/1