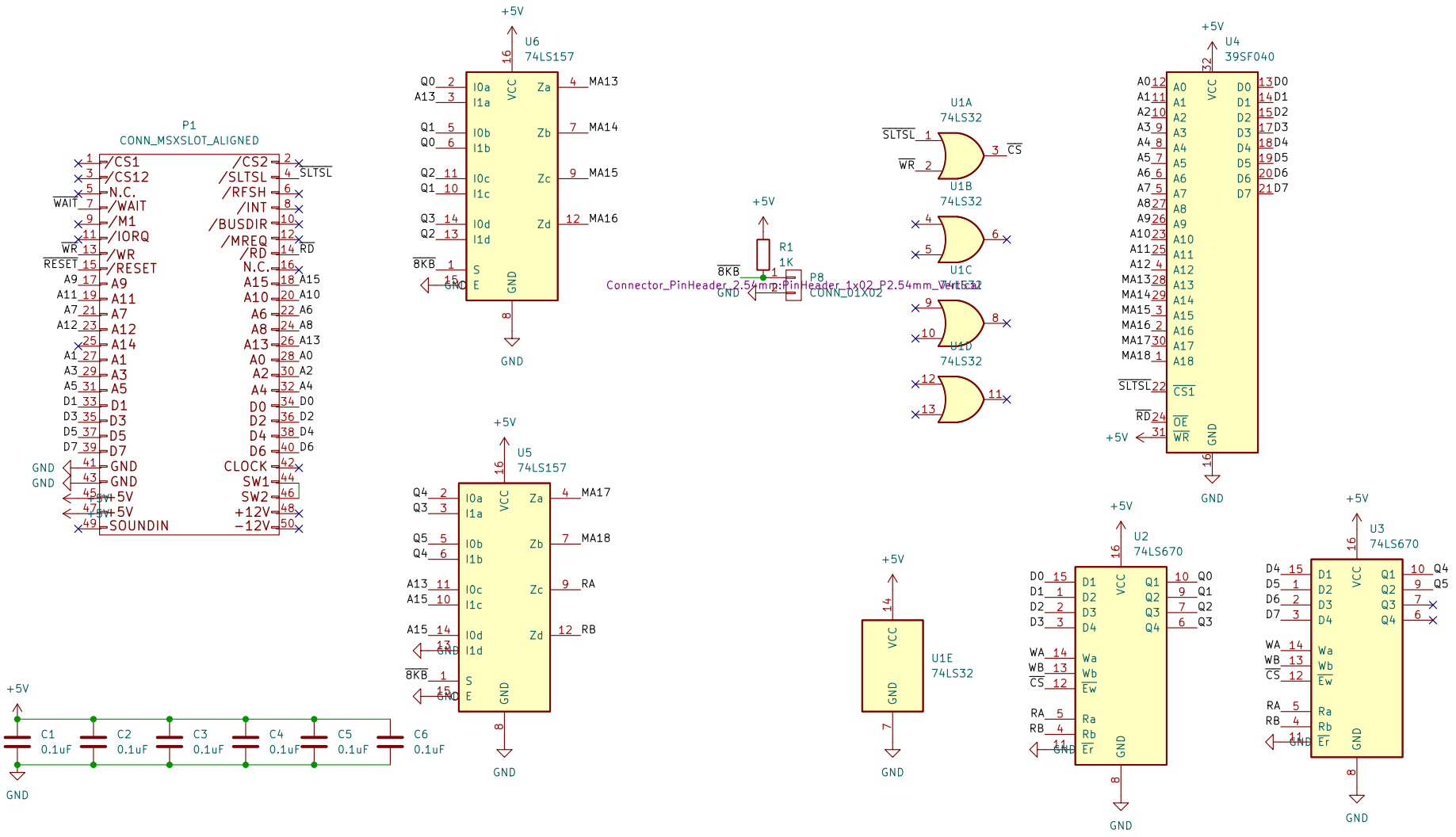

https://github.com/borishim/msx-megarom
Designed by Sangwoo Shim

Sheet: /
File: megarom.kicad_sch

Title: MSX megarom cartridge with TTL components

Size: A4	Date: 2022-04-21	Rev: 0.1
KiCad E.D.A. kicad (6.0.2-0)		Id: 1/1