Dessert AMD CZ & CZL UMA 14"

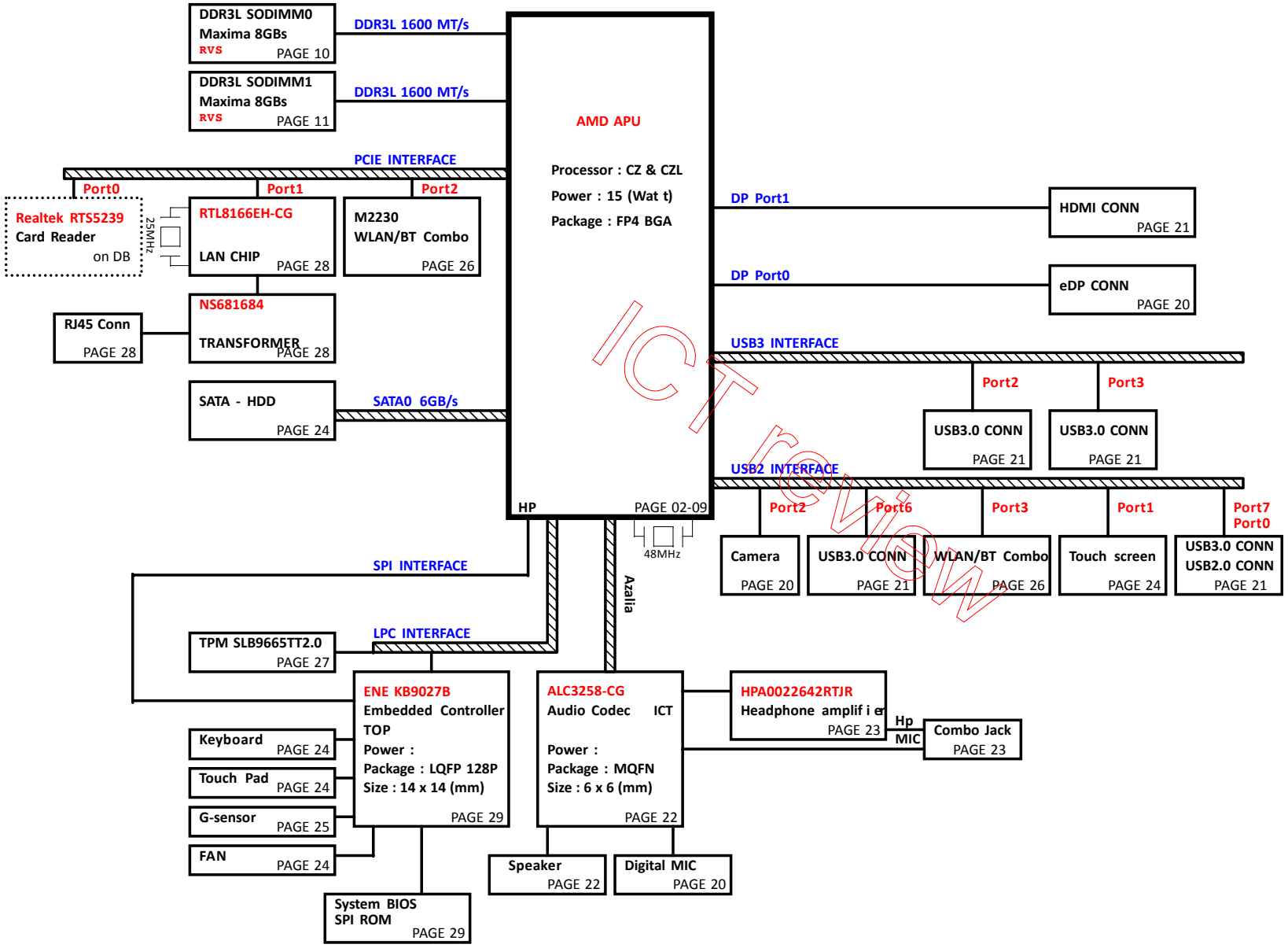

ICT review

PCB 6L STACK UP

LAYER 1 : TOP
LAYER 2 : SGND
LAYER 3 : IN1
LAYER 4 : IN2
LAYER 5 : SVCC
LAYER 6 : BOT

Power Source

ISL88750
System Charge Power
(+BATCHG)
PAGE 31

SY8208B/SY8286C
System Power
(+3VPCU/+5VPCU/+3VS5/+5VS5)
PAGE 32

RT8231B
System Memory Power
(+1.2VSUS/+0.6V_DDR_VTT/+2.5VSUS)
PAGE 33

APW8826/APW8826/G9336
Processor Power
(+0.95VS5/1.5VS5/0.775VS5)
PAGE 34

AOZ1267/RT8068AZQW
Processor Power
(+0.95V/+1.8VS5)
PAGE 35

ISL62771
Processor Power
(+VCC_CORE/+VDDNB_CORE)
PAGE 36.37

ISL62771
Processor Power
(+APU_VDDGFX)
PAGE 38.39

APL3523A *3
System Power
(+3/+3VLANVCC/+5V/+3VSUS/
+1.5V/+1.8V_ROM/+1.8V)
PAGE 40

G5018
Processor Power
(+VDDCR_FCH_S5)
PAGE 41

NB5

PROJECT : G51A
Quanta Computer Inc.

Size	Document Number	Rev
	Block Diagram	1A

Date: Monday, April 11, 2016 | Sheet 1 of 41

www.vinafix.com

	QBCON	TOPBSQ
Carrizo	AJ00870UT01	AJ00870UT00
Carrizo-L	AJ07410UT04	AJ07410UT03

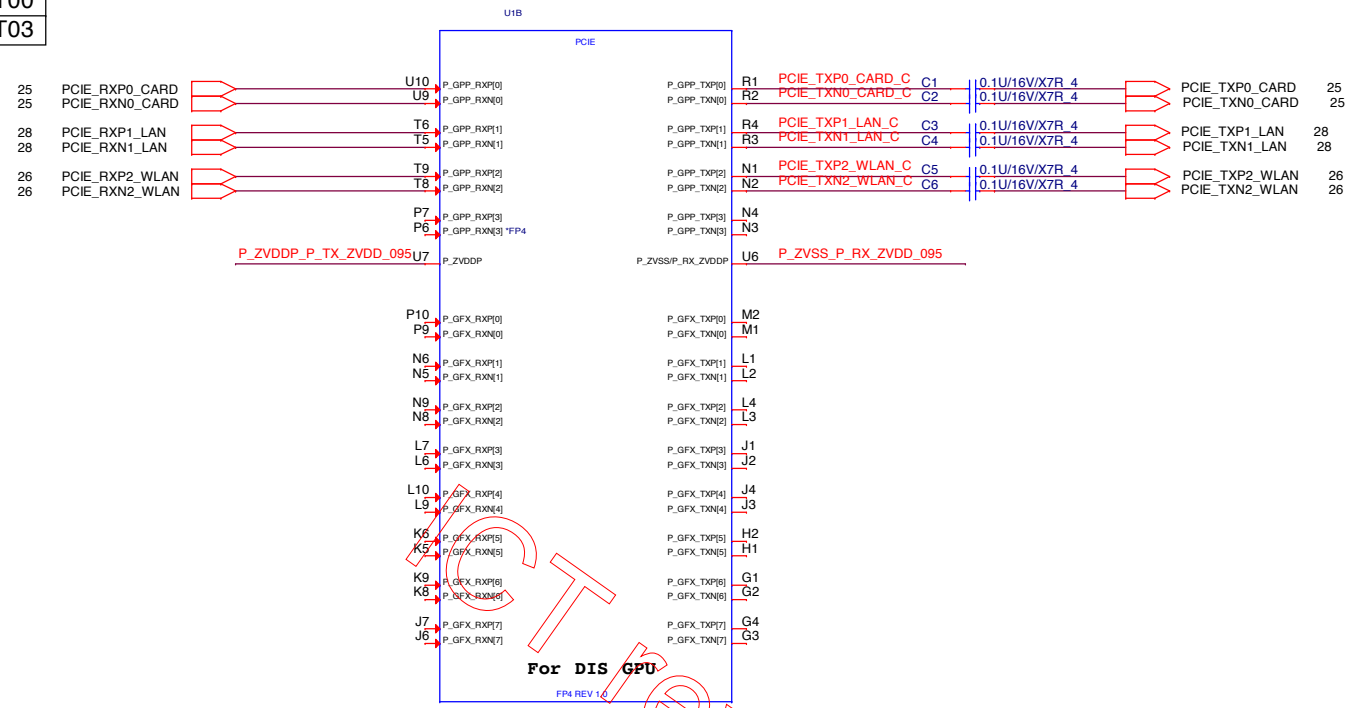

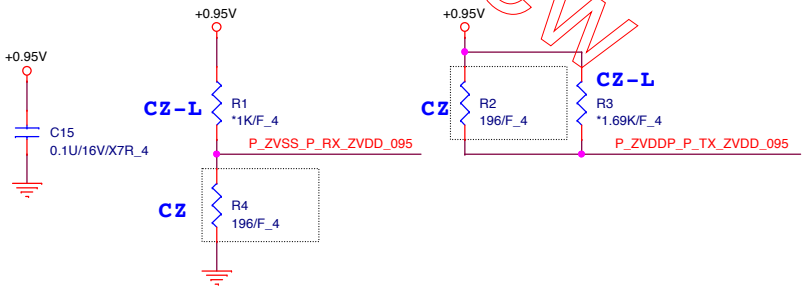

CT review

NB5

PROJECT : G51A
Quanta Computer Inc.

Size	Document Number	Rev
	CZ & CZL 1/7 (PCIE)	1A

Date: Monday, April 11, 2016 Sheet 2 of 41

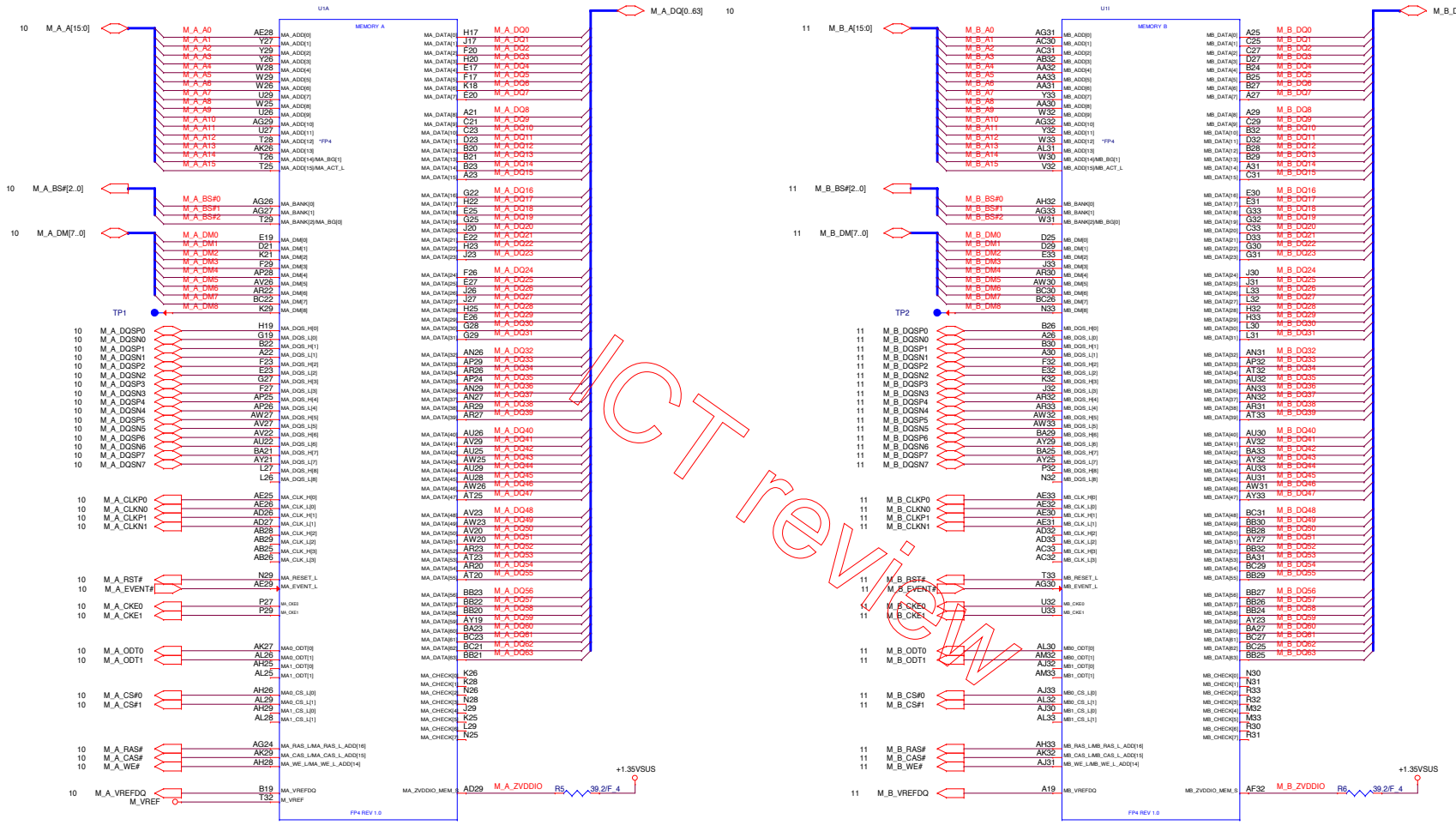

CR-L only channel B

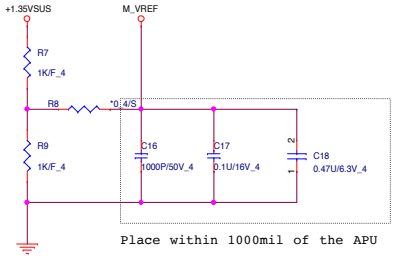

Place within 1000mil of the APU

ICT review

NB5	**PROJECT : G51A** Quanta Computer Inc.	
Size	Document Number CZ & CZL 2/7 (MEM)	Rev 1A
Date: Monday, April 11, 2016	Sheet 3 of 41	

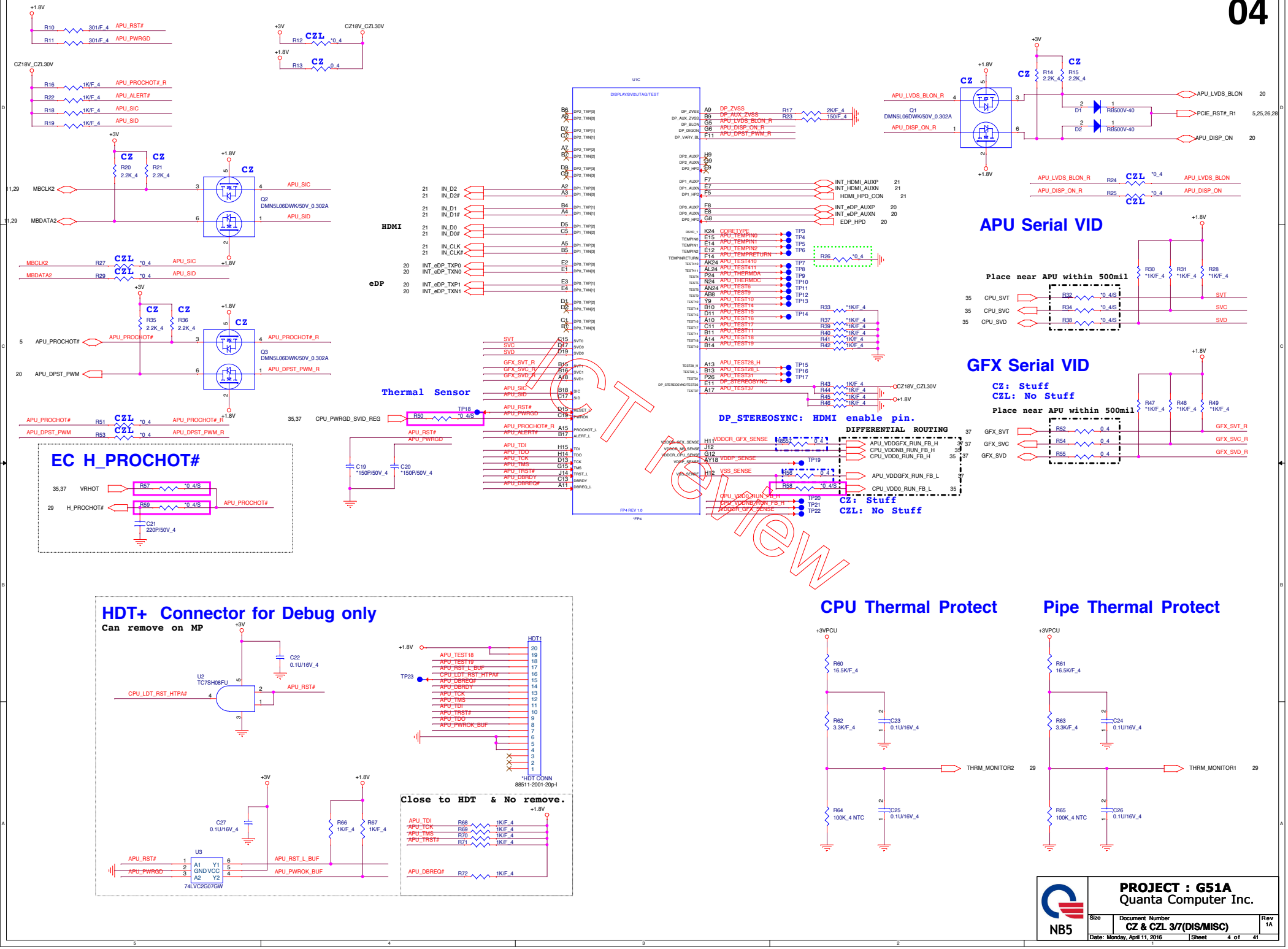

PROJECT : G51A Quanta Computer Inc.			
NB5	Size	Document Number CZ & CZL 3/7(DIS/MISC)	Rev 1A
	Date: Monday, April 11, 2016	Sheet 4 of 41	

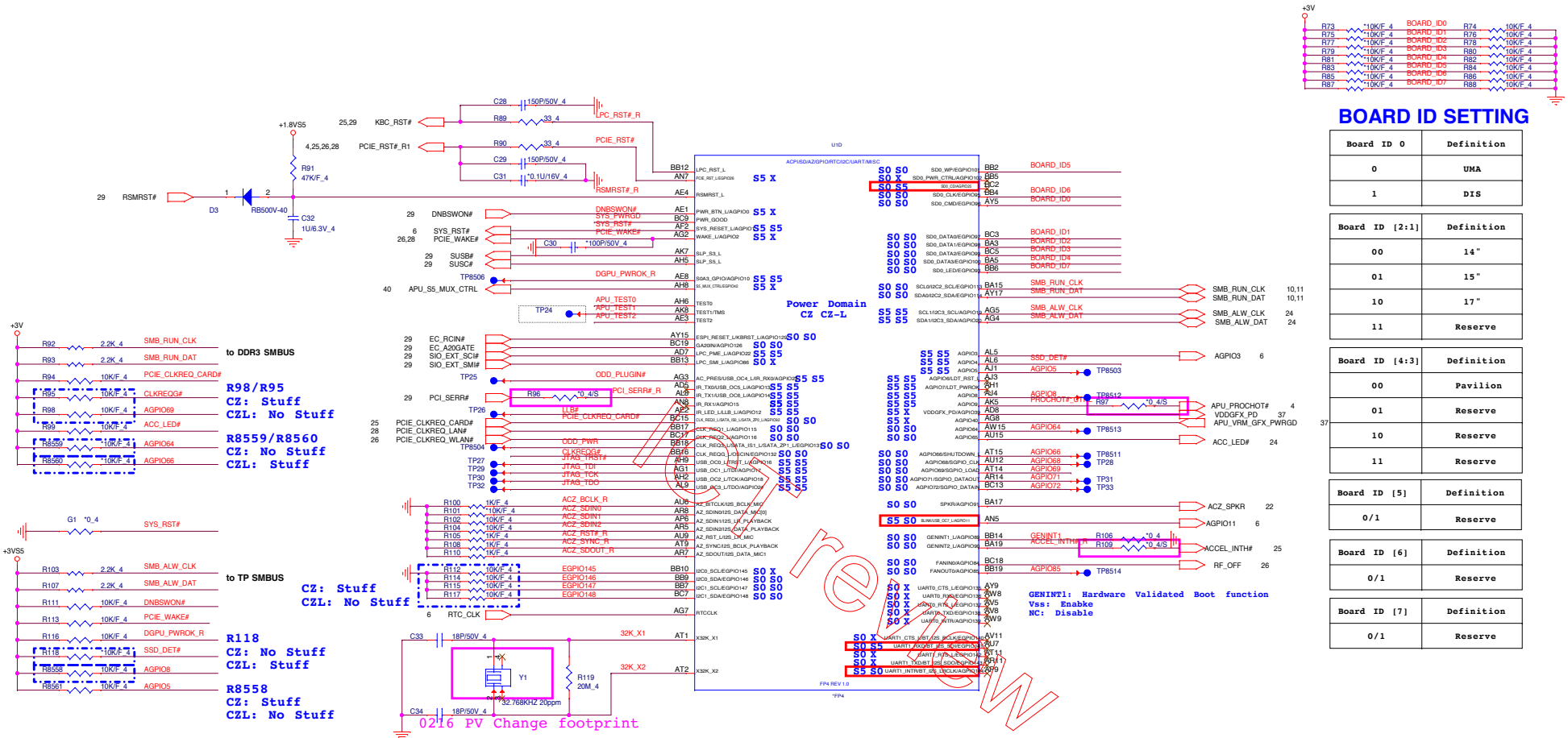

BOARD ID SETTING

Board ID 0	Definition
0	UMA
1	DIS

Board ID [2:1]	Definition
00	14"
01	15"
10	17"
11	Reserve

Board ID [4:3]	Definition
00	Pavilion
01	Reserve
10	Reserve
11	Reserve

Board ID [5]	Definition
0/1	Reserve

Board ID [6]	Definition
0/1	Reserve

Board ID [7]	Definition
0/1	Reserve

GENINT1: Hardware Validated Boot function
Vss: Enable
NC: Disable

Follow AMD checklist 53537_1_09 suggestion.

HDA INTERFACE

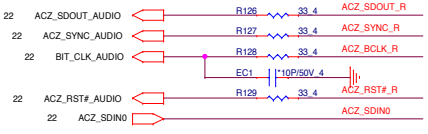

SYS PWRGD

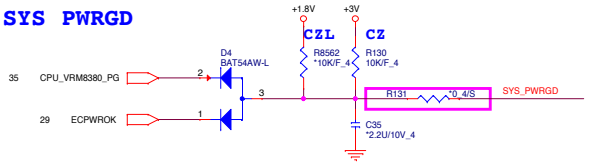

TEST2	TEST1	TEST0	Description
0	0	0	FCH TAP accessible from APU when TAPEN is asserted FCH JTAG pins are overloaded for multiple functions, in this configuration the FCH JTAG are used as non-JTAG pins
0	0	1	Reserved
0	1	X	Reserved
1	TMS	0	FCH JTAG multi-function pins are configured as JTAG pins, in this configuration the FCH TAP can be accessed from FCH JTAG pins
1	TMS	1	Use on ATE only Yuba JTAG enabled

NB5	PROJECT : G51A Quanta Computer Inc.		
	Size	Document Number CZ & CZL 4/7(GPIO/AZ/UART)	Rev 1A
	Date: Monday, April 11, 2016	Sheet 5 of 41	

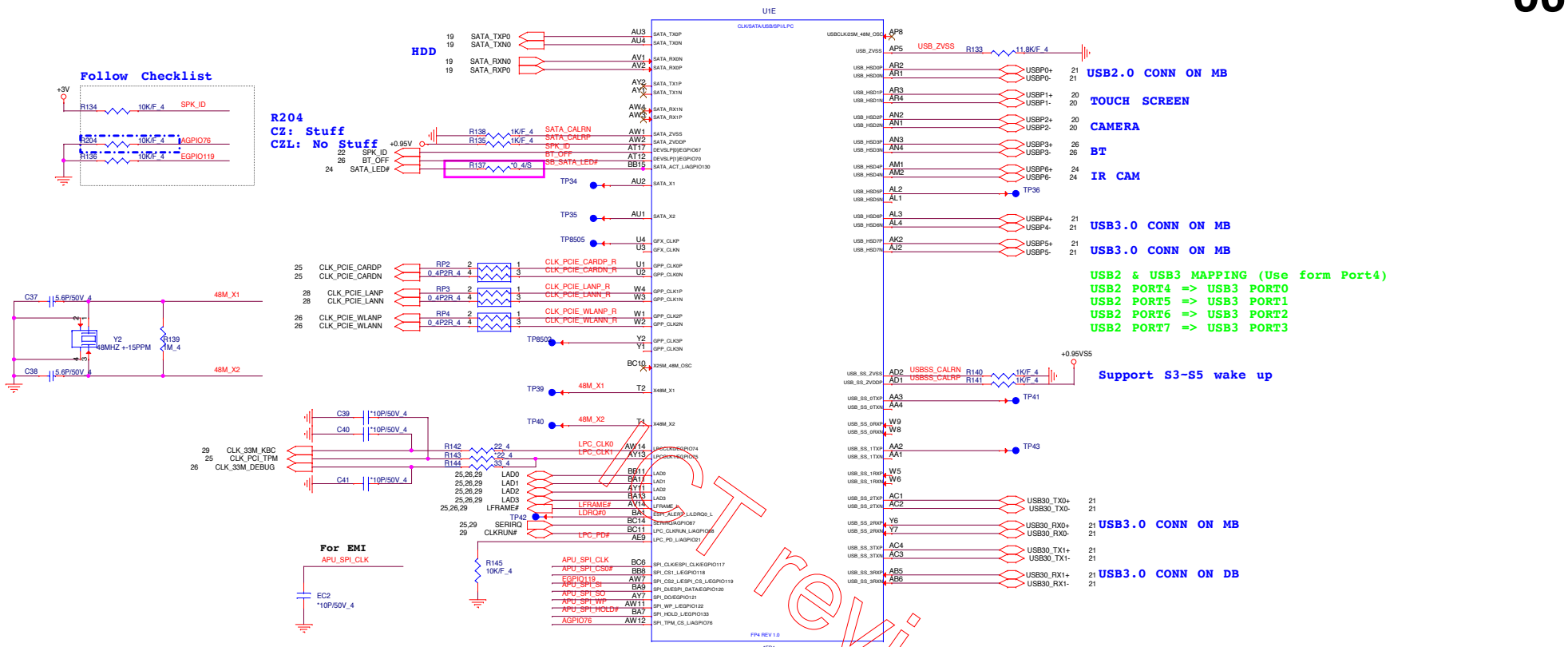

STRAPS PINS

OVERLAP COMMON PADS WHERE POSSIBLE FOR DUAL-OP RESISTORS.

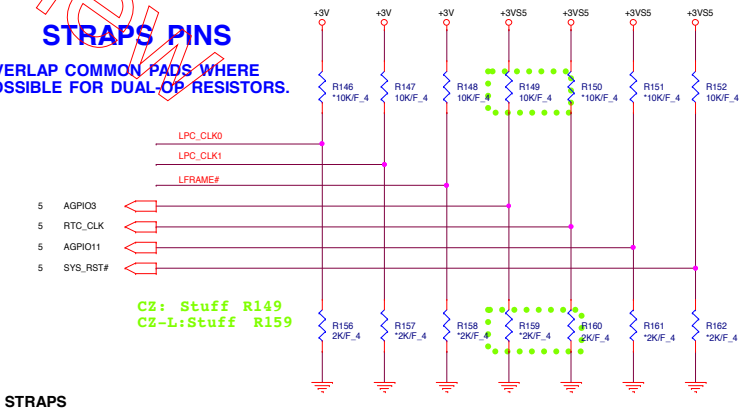

REQUIRED STRAPS

	LPC_CLK0	LPC_CLK1	LFRAME#	AGPIO3 (Int Pull-Up)		RTC_CLK (Int Pull-Up)	AGPIO11=BLINK (Int Pull-Up)	SYS_RST# (Int Pull-Up)
				CZ-L	CZ			
PULL HIGH	BOOT FAIL TIMER ENABLED	Use 48Mhz crystal clock and generate both internal and external clocks DEFAULT	SPI ROM DEFAULT	1.8V SPI ROM	Enhanced reset logic (for quicker S5 resume) DEFAULT	Coin battery is on board. DEFAULT	LDT_RST#/LDT_PWRGD output to APU DEFAULT	normal reset mode DEFAULT
PULL LOW	BOOT FAIL TIMER DISABLED DEFAULT	Use 100Mhz PCIE clock as reference clock and generate internal clocks only	LPC ROM	3.3V SPI ROM DEFAULT	Default to traditional reset logic	Coin battery is not on board.	LDT_RST#/LDT_PWRGD output to Pads	short reset mode

NB5	PROJECT : G51A Quanta Computer Inc.	
	Size	Document Number: CZ & CZL 5/7(SATA/USB/SPI) — Rev 1A
	Date: Monday, April 11, 2016	Sheet 6 of 41

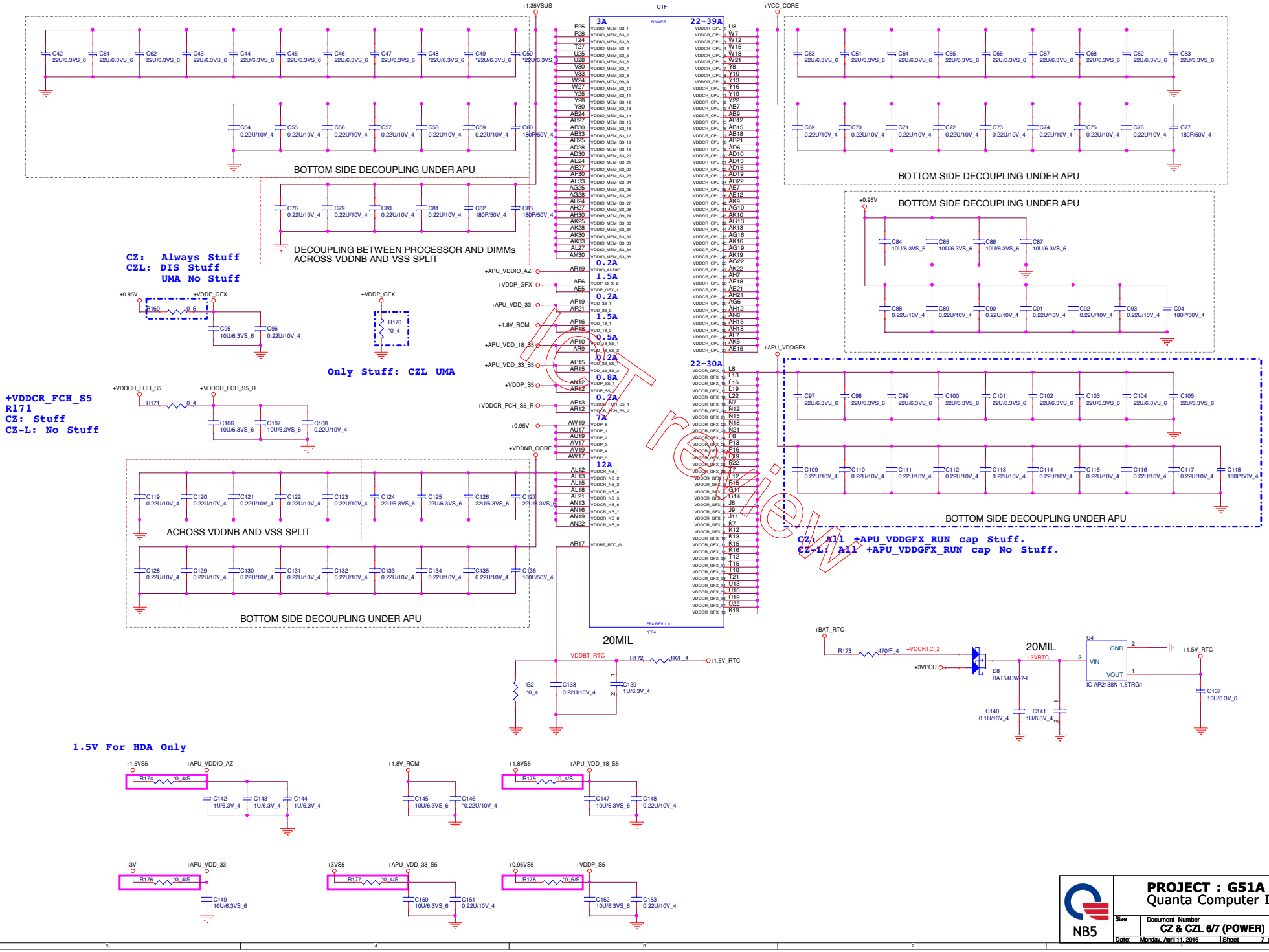

PROJECT : G51A	
Quanta Computer Inc.	
NB5	
Size	Document Number: CZ & CZL 6/7 (POWER) — Rev 1A
Date: Monday, April 11, 2016	Sheet 7 of 41

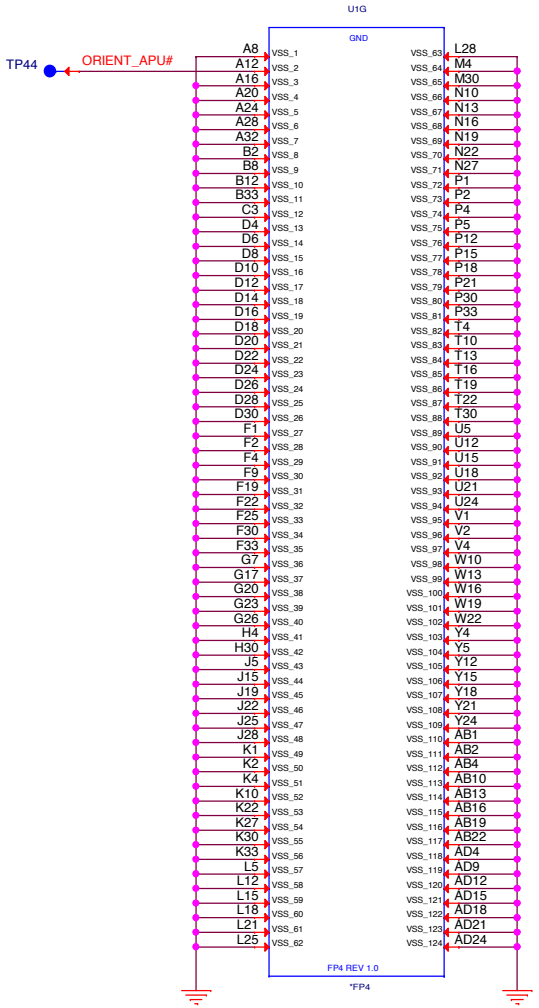

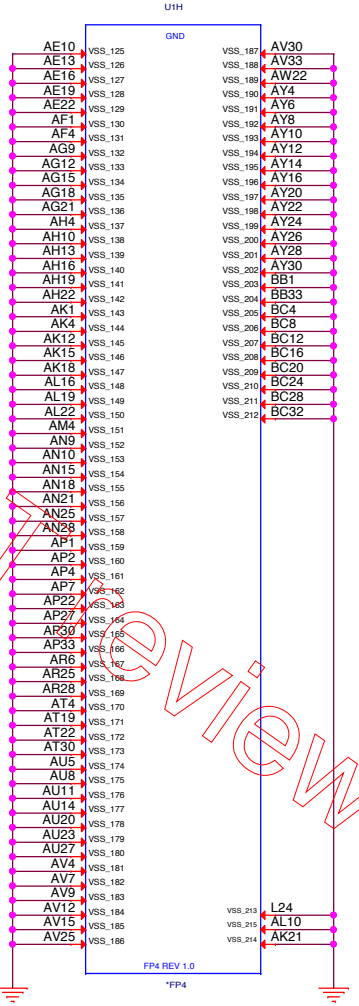

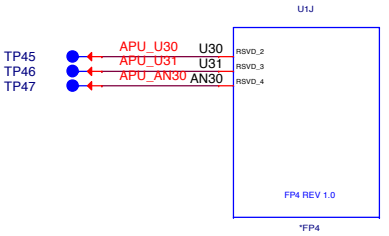

ICT review

NB5

PROJECT : G51A
Quanta Computer Inc.

Size	Document Number	Rev
	CZ & CZL 7/7 (GND)	1A
Date: Monday, April 11, 2016	Sheet 8 of 41	

09

<Reserved>

ICTreview

NB5

PROJECT : G51A
Quanta Computer Inc.

Size	Document Number	Rev
A	**Reserved**	1A

Date: Monday, April 11, 2016 | Sheet 9 of 41

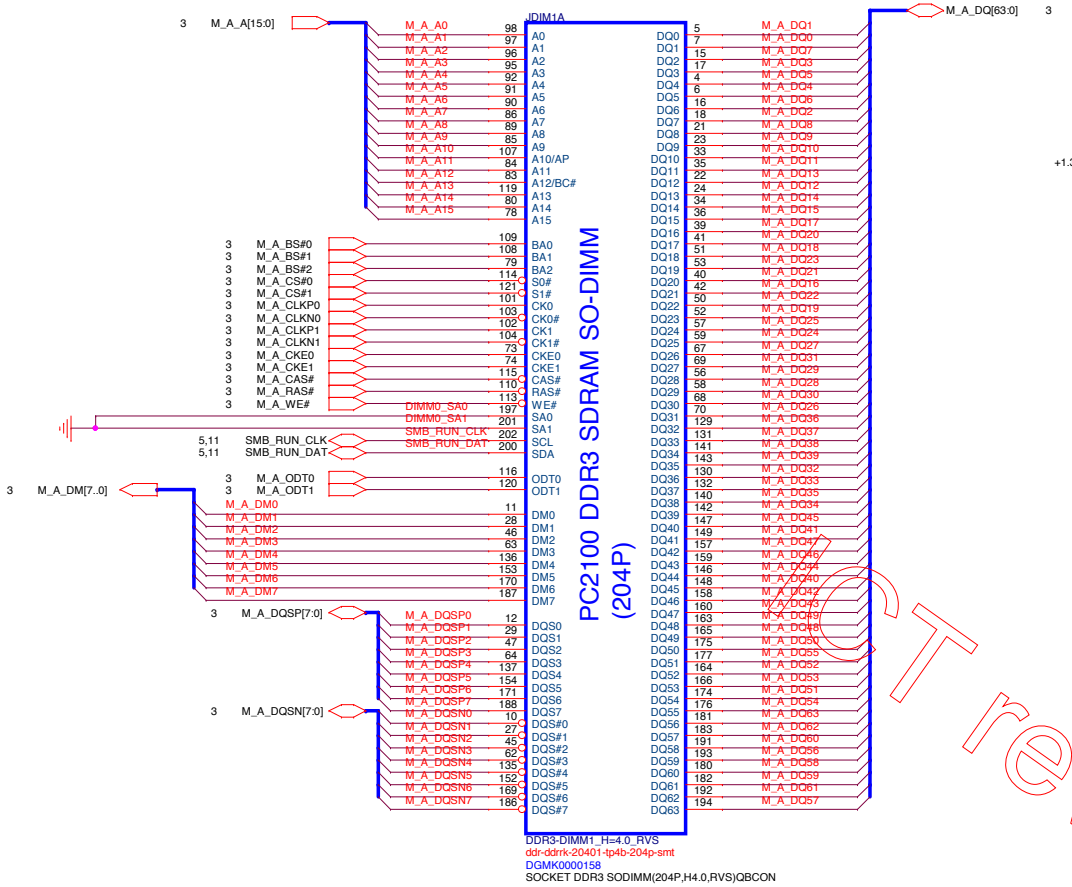

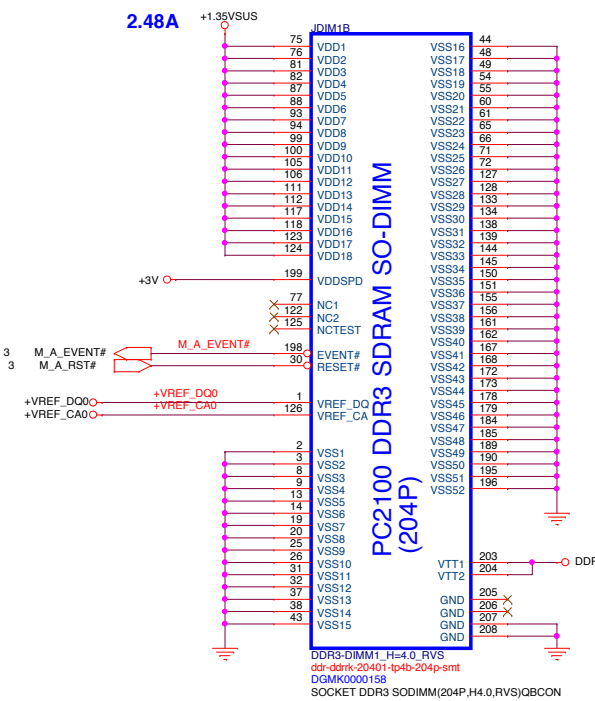

QCT review

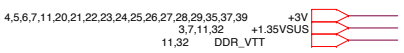

Place these Caps near So-Dimm0.

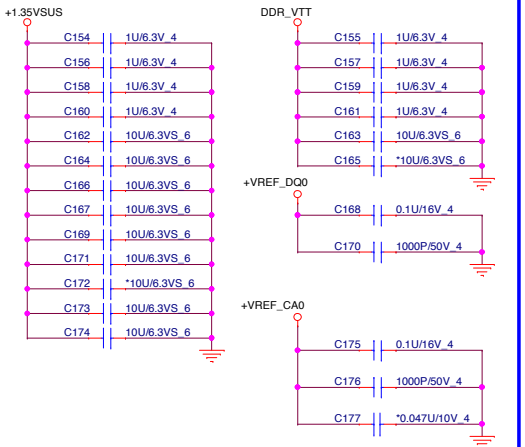

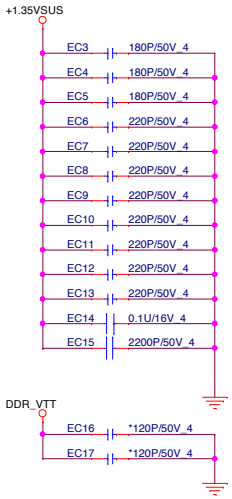

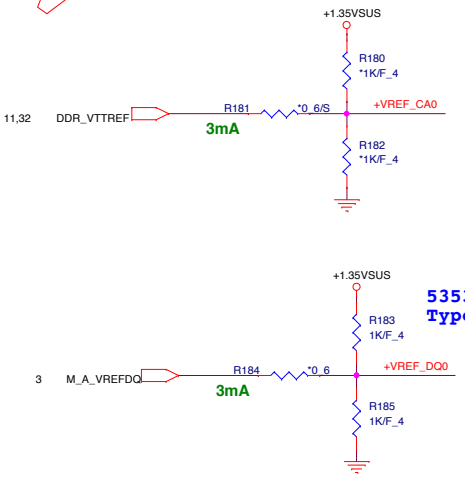

53537_105 change:
Type 1: and Type 2: from 1K/2 voltage

NB5	PROJECT : G51A Quanta Computer Inc.	
Size: Custom	Document Number: System Memory 1/2 (4H)	Rev: 1A
Date: Monday, April 11, 2016	Sheet: 10of	41

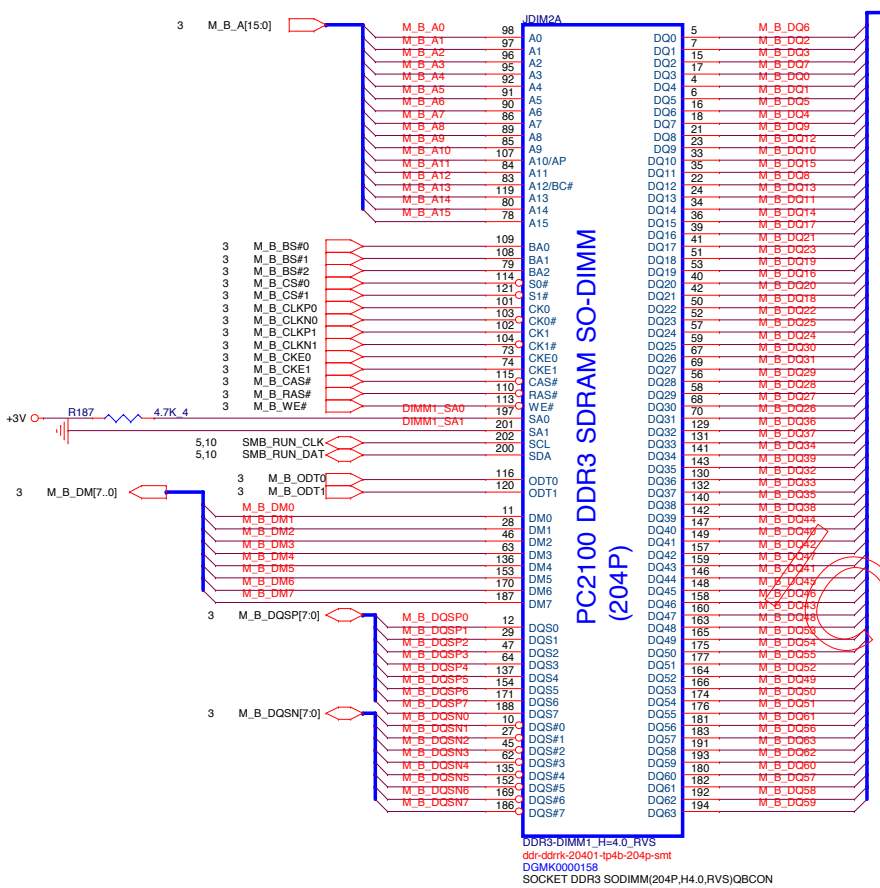

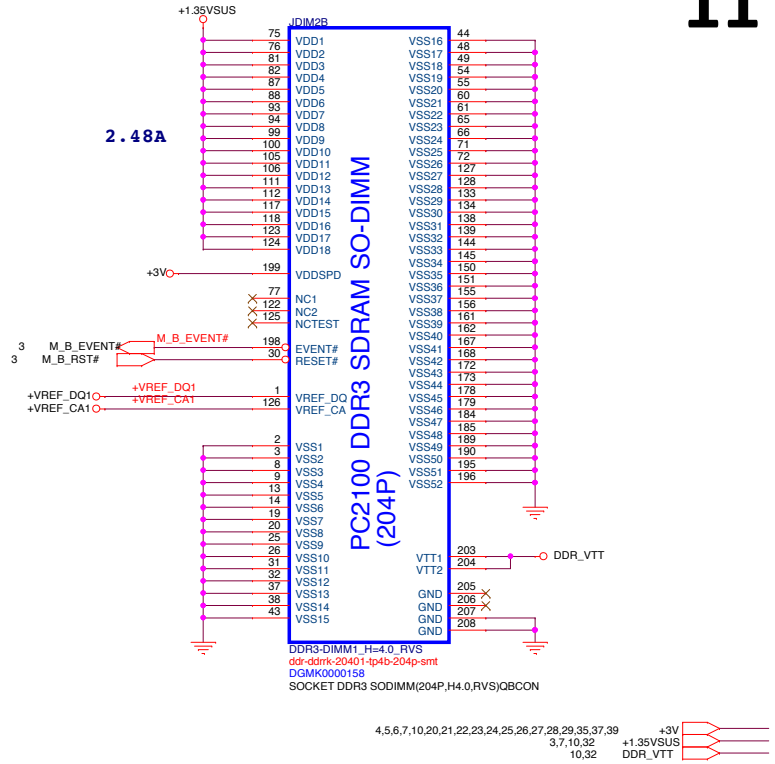

QCT review

Local Thermal Sensor

DDR3 Thermal Sensor

Main:AL000781039 G781-1P8(9Ah)

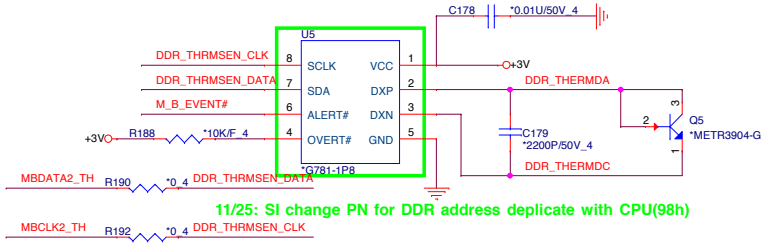

11/25: SI change PN for DDR address deplicate with CPU(98h)

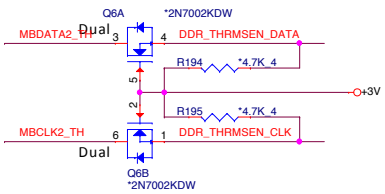

11/25: break length , all platfrom can not use it

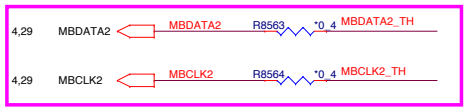

Main:AL000781039 G781-1P8(9Ah)
2nd:AL001412005 EMC1412-2-ACZL-TR(9Ah)

Main:AL001412003 EMC1412-1-ACZL-TR(98h)
2nd:AL000431014 TMP431ADGKR(98h)

Place these Caps near So-Dimm1.

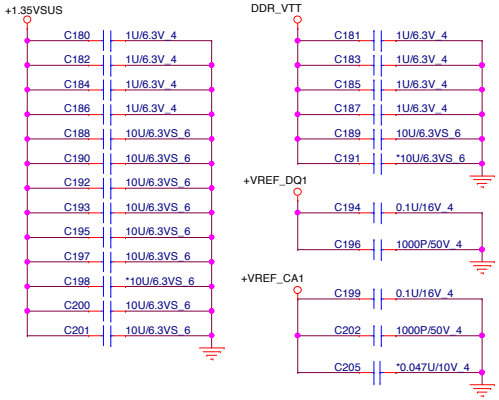

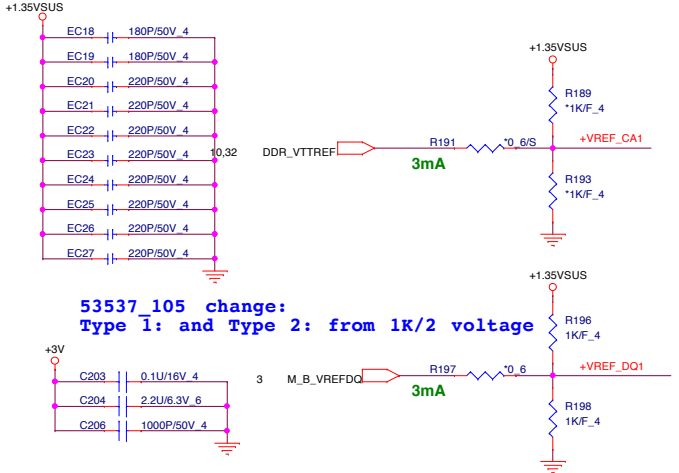

53537_105 change:
Type 1: and Type 2: from 1K/2 voltage

Project	PROJECT : G51A	
	Quanta Computer Inc.	
NB5	Size: Custom	Document Number: System Memory 2/2 (4H)
	Rev: 1A	
	Date: Monday, April 11, 2016	Sheet 11 of 41

<Reserved>

ICT review

NB5

PROJECT : G51A
Quanta Computer Inc.

Size	Document Number	Rev
A	**Reserved**	1A

Date: Monday, April 11, 2016 | Sheet 12of 41

<Reserved>

ICTreview

NB5

PROJECT : G51A
Quanta Computer Inc.

Size	Document Number	Rev
A	**Reserved** ICT	1A
Date: Monday, April 11, 2016	Sheet 13 of 41	

<Reserved>

ICTreview

NB5

PROJECT : G51A
Quanta Computer Inc.

Size	Document Number	Rev
A	**Reserved**	1A

Date: Monday, April 11, 2016 | Sheet 14 of 41

<Reserved>

ICTreview

NB5

PROJECT : G51A
Quanta Computer Inc.

Size	Document Number	Rev
A	**Reserved** HP	1A
Date: Monday, April 11, 2016	Sheet 15 of 41	

<Reserved>

ICTreview

NB5

PROJECT : G51A
Quanta Computer Inc.

Size	Document Number	Rev
A	**Reserved**	1A

Date: Monday, April 11, 2016 | Sheet 16of 41

<Reserved>

ICTreview

NB5

PROJECT : G51A
Quanta Computer Inc.

Size	Document Number	Rev
A	**Reserved**	1A

Date: Monday, April 11, 2016 | Sheet 17of 41

<Reserved>

ICTreview

NB5

PROJECT : G51A
Quanta Computer Inc.

Size	Document Number	Rev
A	**Reserved**	1A

Date: Monday, April 11, 2016 | Sheet 18of 41

0407 : MV modify it

HDD REDRIVER

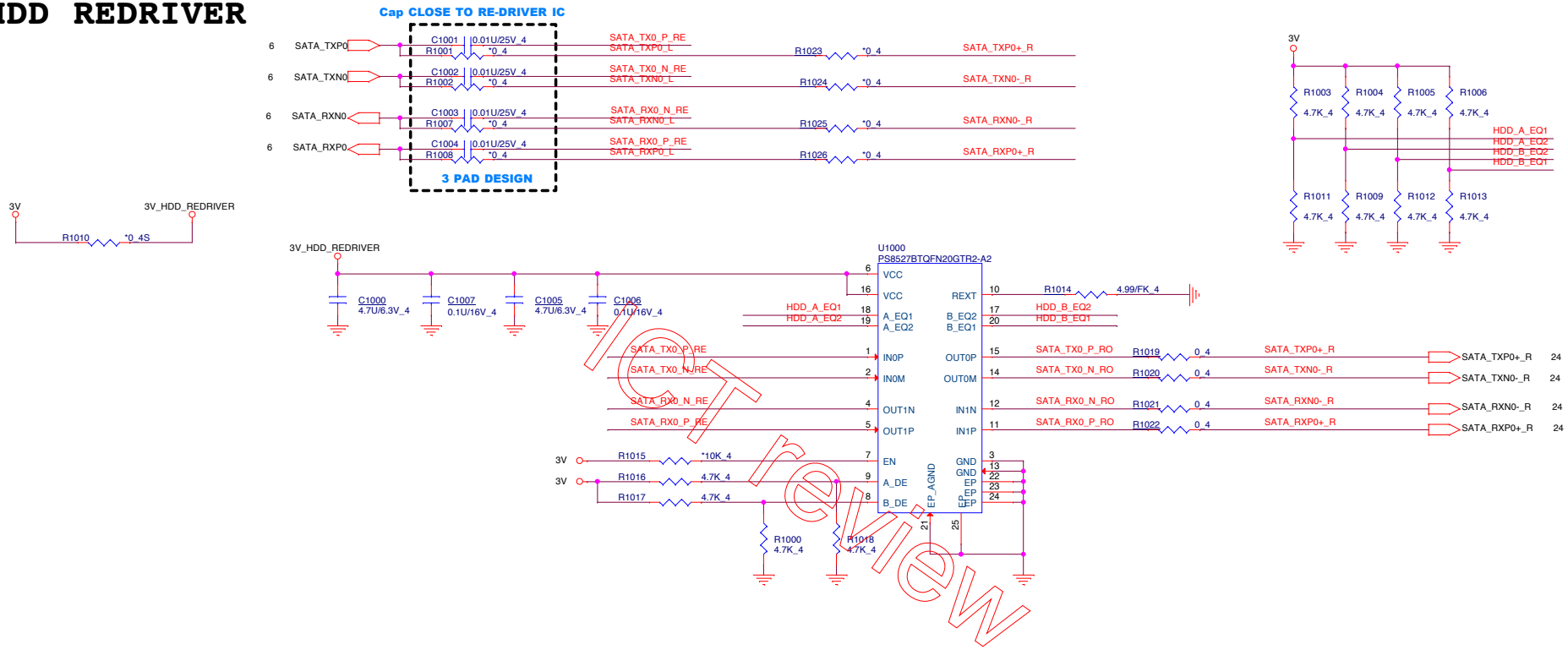

QCT review

NB5	PROJECT : G51A Quanta Computer Inc.		
Size: Custom	Document Number: Reserved		Rev: 1A
Date: Monday, April 11, 2016	Sheet 19 of 41		

LID Switch

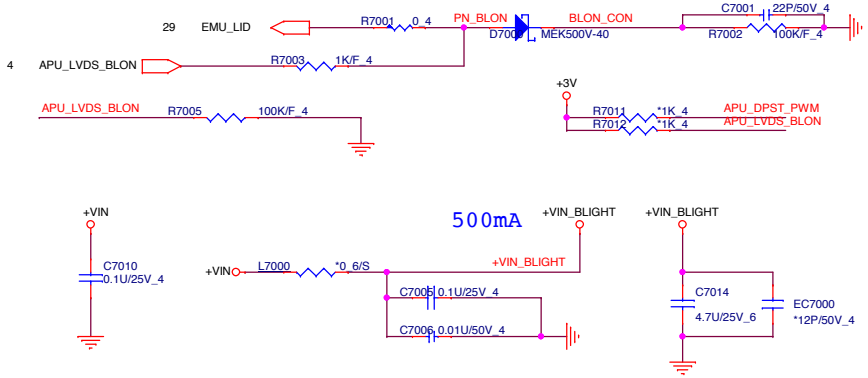

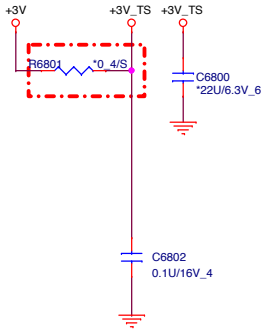

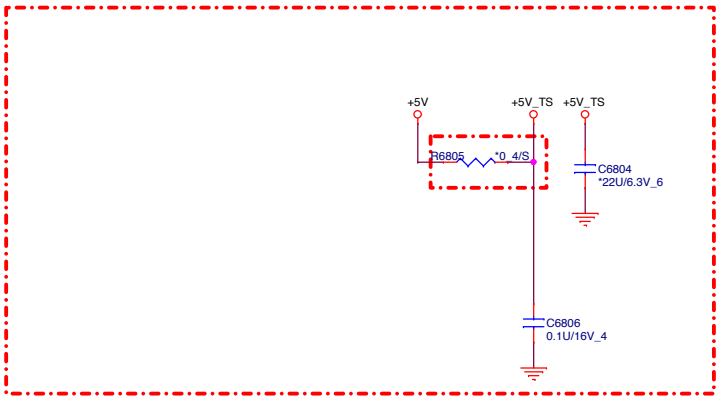

ICT review

1002 DEL

9/23 swap pin

eDP Conn. 20

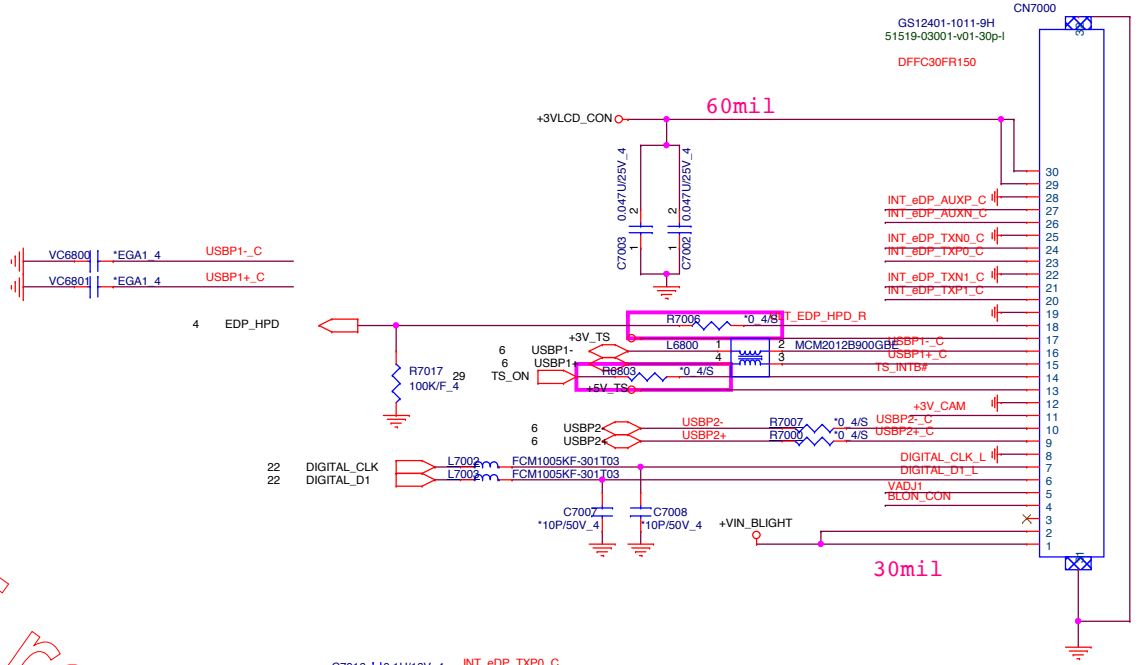

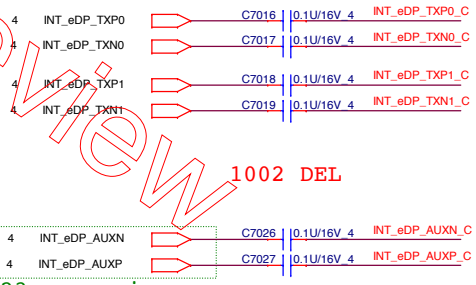

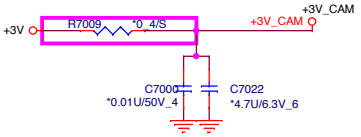

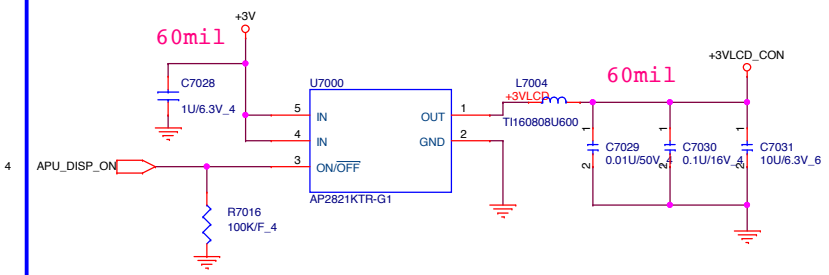

24 +3V_CAM
5,6,7,26,27,29,31,33,39,40 +3VS
21,22,27,31,32,33,34,35,37,39,40 +5VS
4,5,6,7,10,11,21,22,23,24,25,26,27,28,29,35,37,39 +3V
4,7,24,26,29,30,31,41 +3VPCU
21,22,23,24,27,39 +5V
24,27,30,31,32,34,36,38,39,40 +VIN

NB5

PROJECT : G51A
Quanta Computer Inc.

Size	Document Number	Rev
Custom	LCD CONN/LID/CAM	2A
Date: Monday, April 11, 2016	Sheet 20 of 41	

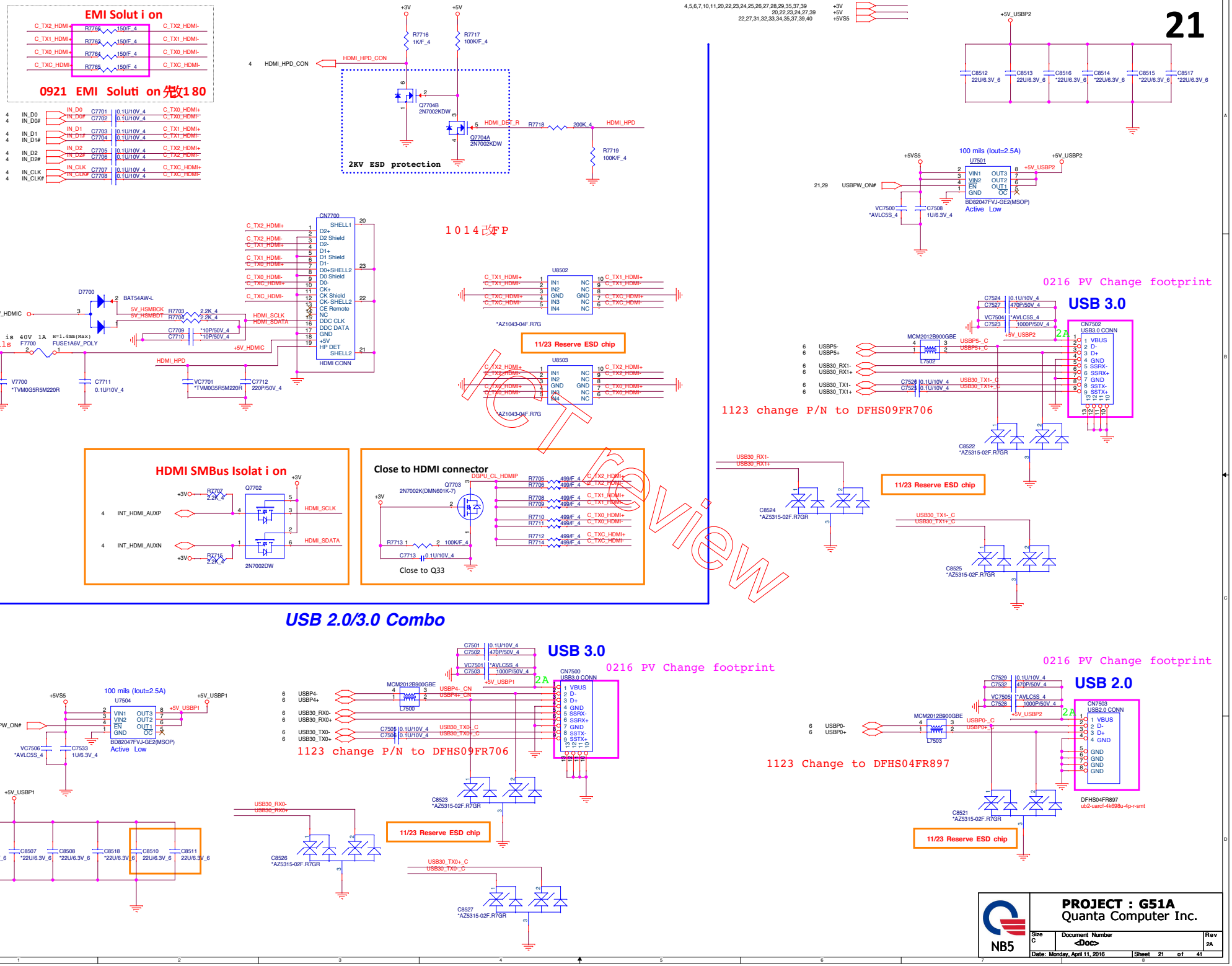
21
EMI Solut i on
0921 EMI Soluti on 敷180
2KV ESD protection
1014改FP
11/23 Reserve ESD chip
HDMI SMBus Isolat i on
Close to HDMI connector
Close to Q33
100 mils (Iout=2.5A)
Active Low
0216 PV Change footprint
USB 3.0
1123 change P/N to DFHS09FR706
USB 2.0/3.0 Combo
USB 2.0
1123 Change to DFHS04FR897
PROJECT : G51A
Quanta Computer Inc.
NB5
Size C
Document Number <Doc>
Rev 2A
Date: Monday, April 11, 2016
Sheet 21 of 41

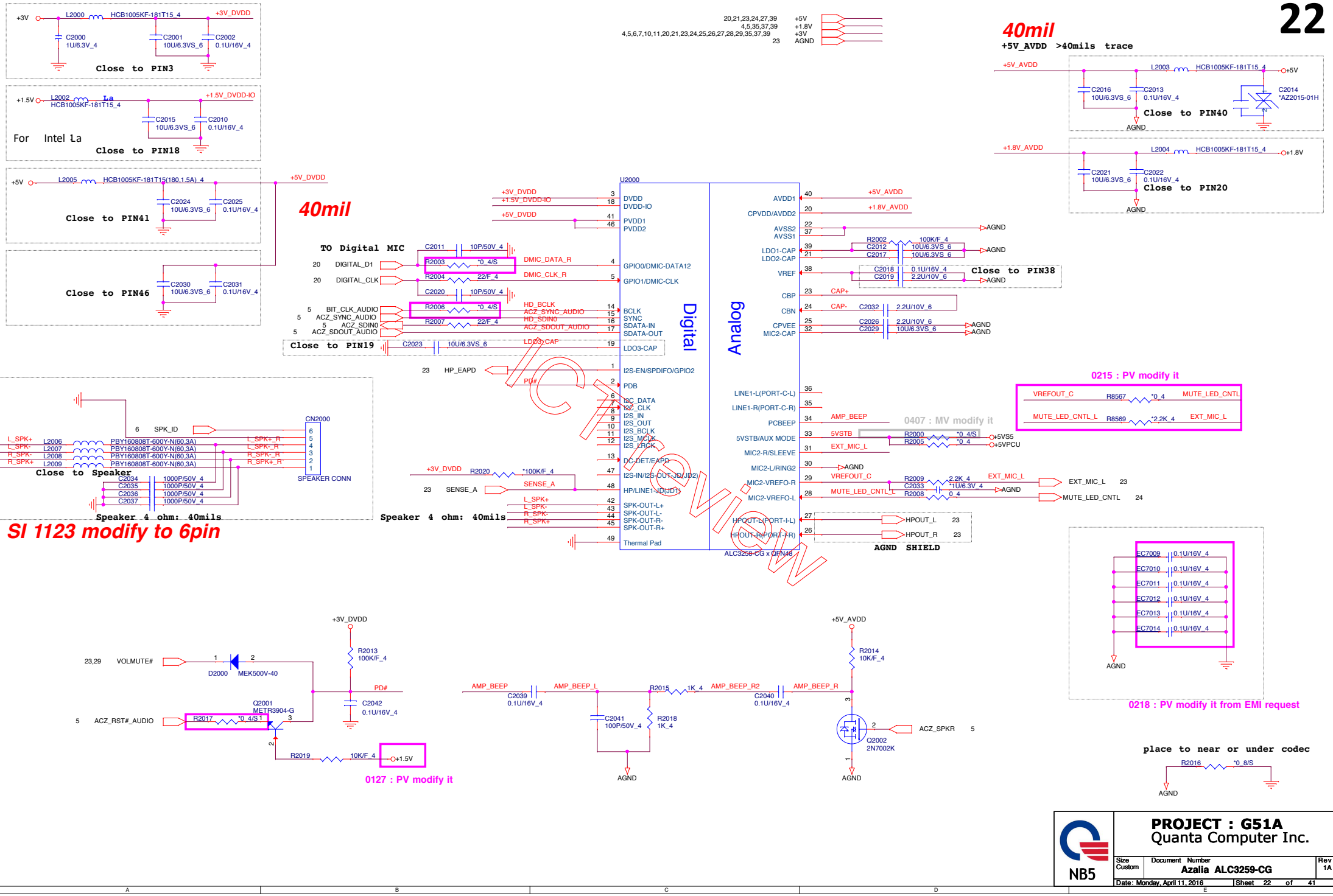
+3V
L2000 HCB1005KF-181T15_4
+3V_DVDD
C2000 1U/6.3V_4
C2001 10U/6.3VS_6
C2002 0.1U/16V_4
Close to PIN3
+1.5V
L2002 HCB1005KF-181T15_4
+1.5V_DVDD-IO
C2015 10U/6.3VS_6
C2010 0.1U/16V_4
For Intel La
Close to PIN18
+5V
L2005 HCB1005KF-181T15(180,1.5A)_4
+5V_DVDD
C2024 10U/6.3VS_6
C2025 0.1U/16V_4
Close to PIN41
C2030 10U/6.3VS_6
C2031 0.1U/16V_4
Close to PIN46
20,21,23,24,27,39 +5V
4,5,35,37,39 +1.8V
4,5,6,7,10,11,20,21,23,24,25,26,27,28,29,35,37,39 +3V
23 AGND
40mil
+5V_AVDD >40mils trace
+5V_AVDD
L2003 HCB1005KF-181T15_4
+5V
C2016 10U/6.3VS_6
C2013 0.1U/16V_4
C2014 *AZ2015-01H
Close to PIN40
AGND
+1.8V_AVDD
L2004 HCB1005KF-181T15_4
+1.8V
C2021 10U/6.3VS_6
C2022 0.1U/16V_4
Close to PIN20
AGND
40mil
TO Digital MIC
C2011 10P/50V_4
20 DIGITAL_D1
R2003 *0_4/S
DMIC_DATA_R
20 DIGITAL_CLK
R2004 22/F_4
DMIC_CLK_R
C2020 10P/50V_4
5 BIT_CLK_AUDIO
5 ACZ_SYNC_AUDIO
5 ACZ_SDIN0
5 ACZ_SDOUT_AUDIO
R2006 *0_4/S
R2007 22/F_4
HD_BCLK
ACZ_SYNC_AUDIO
HD_SDIN0
ACZ_SDOUT_AUDIO
Close to PIN19
C2023 10U/6.3VS_6
LDO3_CAP
23 HP_EAPD
PD#
+3V_DVDD
+1.5V_DVDD-IO
+5V_DVDD
U2000
DVDD
DVDD-IO
PVDD1
PVDD2
GPIO0/DMIC-DATA12
GPIO1/DMIC-CLK
BCLK
SYNC
SDATA-IN
SDATA-OUT
LDO3-CAP
I2S-EN/SPDIFO/GPIO2
PDB
I2C_DATA
I2C_CLK
I2S_IN
I2S_OUT
I2S_BCLK
I2S_MCLK
I2S_LRCK
DC-DET/EAPD
I2S-IN/I2S-OUT-JD(JD2)
HP/LINE1-JD(JD1)
SPK-OUT-L+
SPK-OUT-L-
SPK-OUT-R-
SPK-OUT-R+
Thermal Pad
Digital
Analog
AVDD1
CPVDD/AVDD2
AVSS2
AVSS1
LDO1-CAP
LDO2-CAP
VREF
CBP
CBN
CPVEE
MIC2-CAP
LINE1-L(PORT-C-L)
LINE1-R(PORT-C-R)
PCBEEP
5VSTB/AUX MODE
MIC2-R/SLEEVE
MIC2-L/RING2
MIC2-VREFO-R
MIC2-VREFO-L
HPOUT-L(PORT-I-L)
HPOUT-R(PORT-I-R)
ALC3258-CG x QFN48
+5V_AVDD
+1.8V_AVDD
AGND
R2002 100K/F_4
C2012 10U/6.3VS_6
C2017 10U/6.3VS_6
C2018 0.1U/16V_4
C2019 2.2U/10V_6
Close to PIN38
CAP+
CAP-
C2032 2.2U/10V_6
C2026 2.2U/10V_6
C2029 10U/6.3VS_6
AMP_BEEP
0407 : MV modify it
5VSTB
R2000 *0_4/S
R2005 *0_4
+5VS5
+5VPCU
EXT_MIC_L
VREFOUT_C
R2009 2.2K_4
C2033 *1U/6.3V_4
R2008 0_4
MUTE_LED_CNTL_L
EXT_MIC_L 23
MUTE_LED_CNTL 24
HPOUT_L 23
HPOUT_R 23
AGND SHIELD
0215 : PV modify it
VREFOUT_C
R8567 *0_4
MUTE_LED_CNTL
MUTE_LED_CNTL_L
R8569 *2.2K_4
EXT_MIC_L
L_SPK+
L_SPK-
R_SPK-
R_SPK+
L2006 PBY160808T-600Y-N(60,3A)
L2007 PBY160808T-600Y-N(60,3A)
L2008 PBY160808T-600Y-N(60,3A)
L2009 PBY160808T-600Y-N(60,3A)
L_SPK+_R
L_SPK-_R
R_SPK-_R
R_SPK+_R
6 SPK_ID
CN2000
SPEAKER CONN
C2034 1000P/50V_4
C2035 1000P/50V_4
C2036 1000P/50V_4
C2037 1000P/50V_4
Close to Speaker
Speaker 4 ohm: 40mils
+3V_DVDD
R2020 *100K/F_4
23 SENSE_A
SENSE_A
L_SPK+
L_SPK-
R_SPK-
R_SPK+
Speaker 4 ohm: 40mils
SI 1123 modify to 6pin
EC7009 0.1U/16V_4
EC7010 0.1U/16V_4
EC7011 0.1U/16V_4
EC7012 0.1U/16V_4
EC7013 0.1U/16V_4
EC7014 0.1U/16V_4
AGND
0218 : PV modify it from EMI request
+3V_DVDD
23,29 VOLMUTE#
D2000 MEK500V-40
R2013 100K/F_4
PD#
C2042 0.1U/16V_4
5 ACZ_RST#_AUDIO
R2017 *0_4/S
Q2001 METR3904-G
R2019 10K/F_4
+1.5V
0127 : PV modify it
+5V_AVDD
R2014 10K/F_4
AMP_BEEP
C2039 0.1U/16V_4
AMP_BEEP_L
R2015 1K_4
AMP_BEEP_R2
C2040 0.1U/16V_4
AMP_BEEP_R
C2041 100P/50V_4
R2018 1K_4
Q2002 2N7002K
ACZ_SPKR 5
place to near or under codec
R2016 *0_8/S
AGND
Confidential
NB5
PROJECT : G51A
Quanta Computer Inc.
Size Custom
Document Number
Azalia ALC3259-CG
Rev 1A
Date: Monday, April 11, 2016
Sheet 22 of 41

Head Phone out

20,21,22,24,27,39 +5V
22 AGND

40mil

+5V_AMP L2600 HCB1005KF-181T15_4 +5V

+5V_AMP C2600 1U/6.3V_4 AGND
C2601 1U/6.3V_4
C2602 1U/6.3V_4 AGND

Rout as differential pair

22 HPOUT_L HPOUT_L R2601 0_4 HPOUT_L_2 C2603 2.2U/10V_4 HPOUT_L_1
R2603 *0_4/S C2604 2.2U/10V_4
AGND R2600 *0_4
22 HPOUT_R HPOUT_R R2606 0_4 HPOUT_R_2 C2609 2.2U/10V_4 HPOUT_R_1
R2605 *0_4/S C2607 2.2U/10V_4
AGND R2607 *0_4

Rout as differential pair

Placement close the CODEC (U2600)

U2600 TPA6133A2
VDD GND CPP CPM CPVSS
CPVSS HPLEFT GND VDD HPRIGHT
LEFTINML- LEFTINP+ GND RIGHTINP+ RIGHTINM-
SD# TEST2 TEST1 GND GND
AGND AGND AGND AGND AGND AGND AGND AGND AGND AGND
HPA022642RTJR

LINEOUT_L
LINEOUT_R
+5V_AMP C2608 1U/6.3V_4 AGND

LINEOUT_R R2604 0_4 LINEOUT_R_C
LINEOUT_L R2602 0_4 LINEOUT_L_C
C2605 *1000P/50V_4 C2606 *1000P/50V_4 AGND

HPOUT_L R2608 *0_4 LINEOUT_L_C
HPOUT_R R2609 *0_4 LINEOUT_R_C

bypass AMP path

AGND AGND

+3V R2610 100K/F_4
22,29 VOLMUTE# VOLMUTE# 2
22 HP_EAPD HP_EAPD 1
3 AMP_PD#_R
D2600 BAT54A-7-F

TPA6133A2
HPA022642RTJR

+5V_AMP R2611 2K/F_4 R2612 2K/F_4
AMP_CLK
AMP_DAT

In review

Audio Combo

22 EXT_MIC_L L2601 HCB1608KF-601T10 EXT_MIC_1
R2613 *22K/F_4 C2610 100P/50V_4 AGND
VC2600 *AVLC 5S_4 AGND
AGND R2614 0_4
AGND C2611 470P/50V_4

AGND SHIELD LINEOUT_L_C R2615 30/F_4 LINEOUT_L_C1 L2602 FCM1005KF-301T03 LINEOUT_L_C2
AGND SHIELD LINEOUT_R_C R2616 30/F_4 LINEOUT_R_C1 L2603 FCM1005KF-301T03 LINEOUT_R_C2

AGND C2612 470P/50V_4
CN2600 Audio_Combo_Jack

0218 : PV modify it from EMI request

R2617 *0_4 AGND
AGND
SENSE_A 22
VC2601 *AVLC 5S_4 EC2600 *100P/50V_4

1123 modify to DGND

1123 modify P/N to DFTJ06FR836
1123 modify FP to audio-2sj3095-096211f-6p

NB5	PROJECT : G51A Quanta Computer Inc.	
Size: Custom	Document Number: HP AMP HPA022642RTJR	Rev: 1A
Date: Monday, April 11, 2016	Sheet 23 of 41	

KEYBOARD Con.

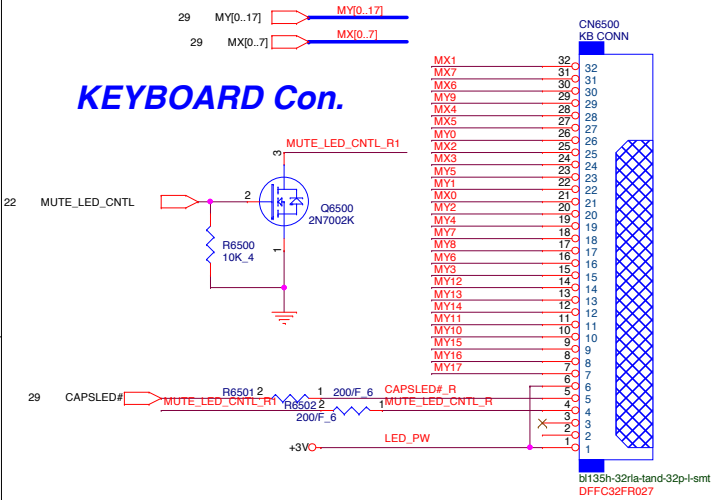

1005 modify

KEYBOARD PULL-UP

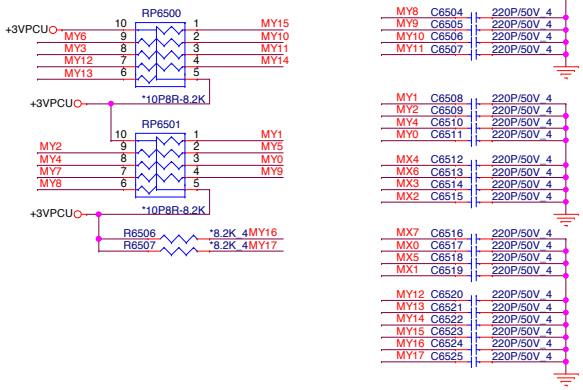

KB LIGHT CONN

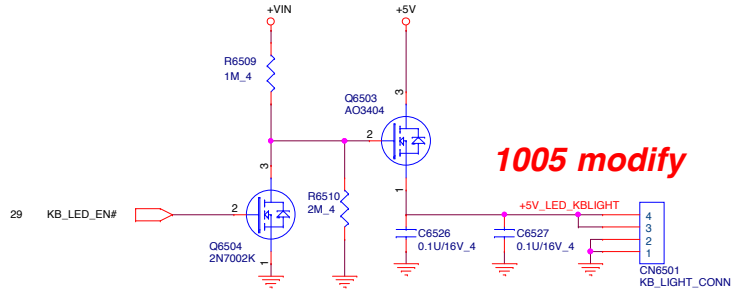

1005 modify

HDD

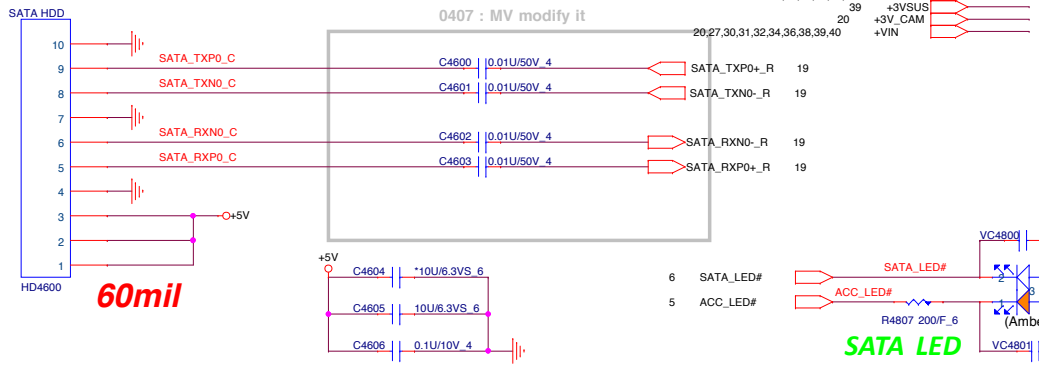

60mil

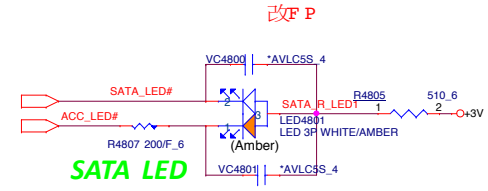

SATA LED

IR CAM

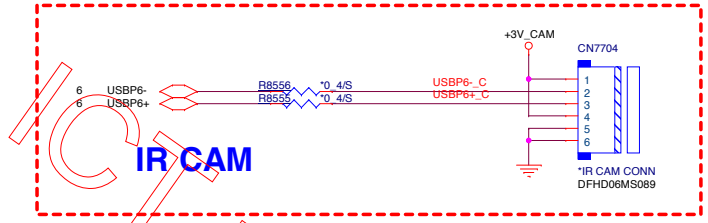

1015 Add IR CAM circuit

FAN

1116 DB modify pindefine

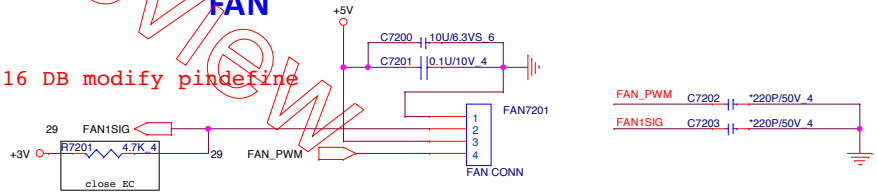

Touch Pad Connector

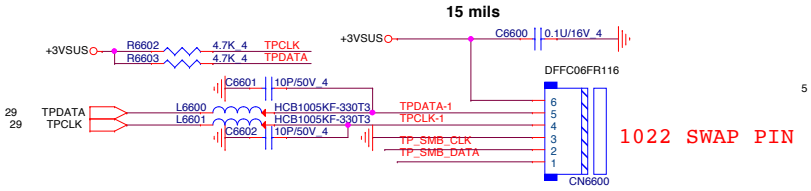

1022 SWAP PIN

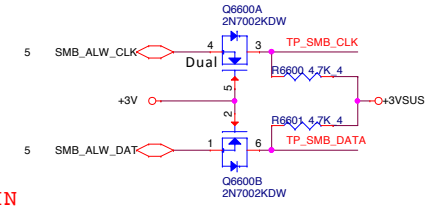

1005 DFFC06FR116

PROJECT : G51A
Quanta Computer Inc.

NB5

Size	Document Number	Rev
Custom	KB	1A

Date: Monday, April 11, 2016 Sheet 24 of 41

TPM (2.0)

PN:AL009665K01

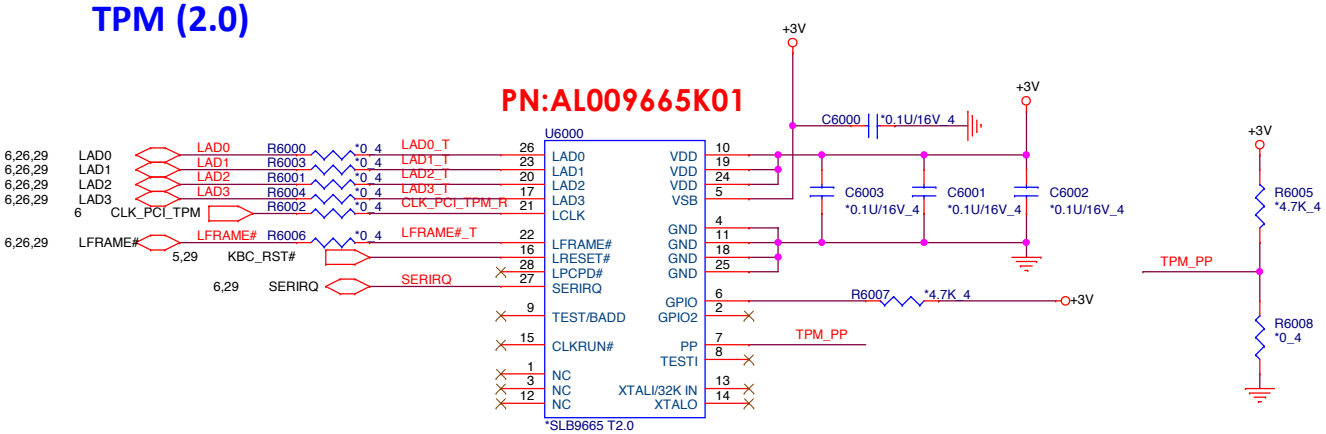

Accelerometer Sensor

ICT review

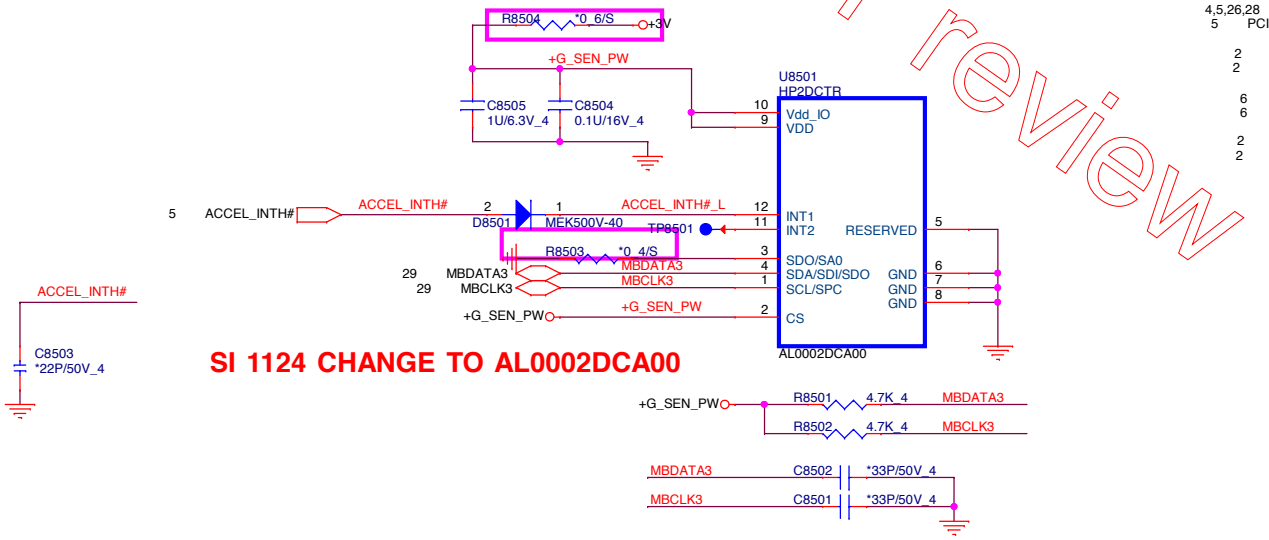

SI 1124 CHANGE TO AL0002DCA00

1014 modify pindefine

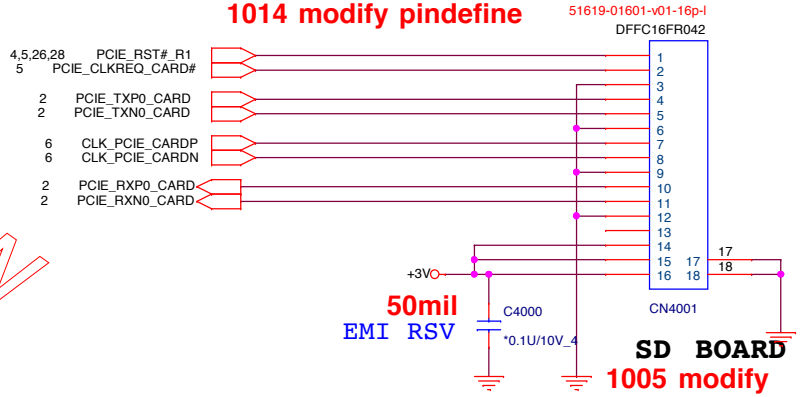

4,5,6,7,10,11,20,21,22,23,24,26,27,28,29,35,37,39 +3V

PROJECT : G51A Quanta Computer Inc.				
B	<Doc>	Size	Document Number	<RevCode>
NB5		Monday, April 11, 2016	25	41
		Date:	Sheet	of

Mini Card WLAN/BT(Opt i on)

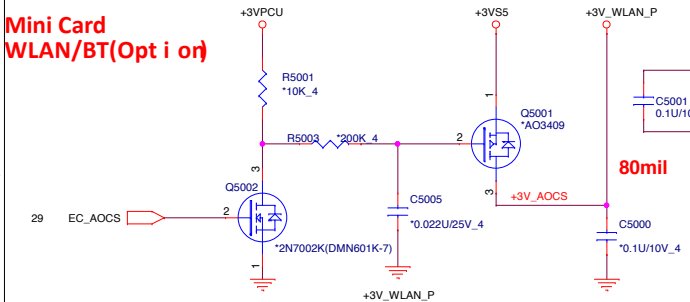

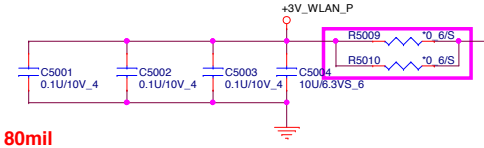

1014 chaneg FP for shortage

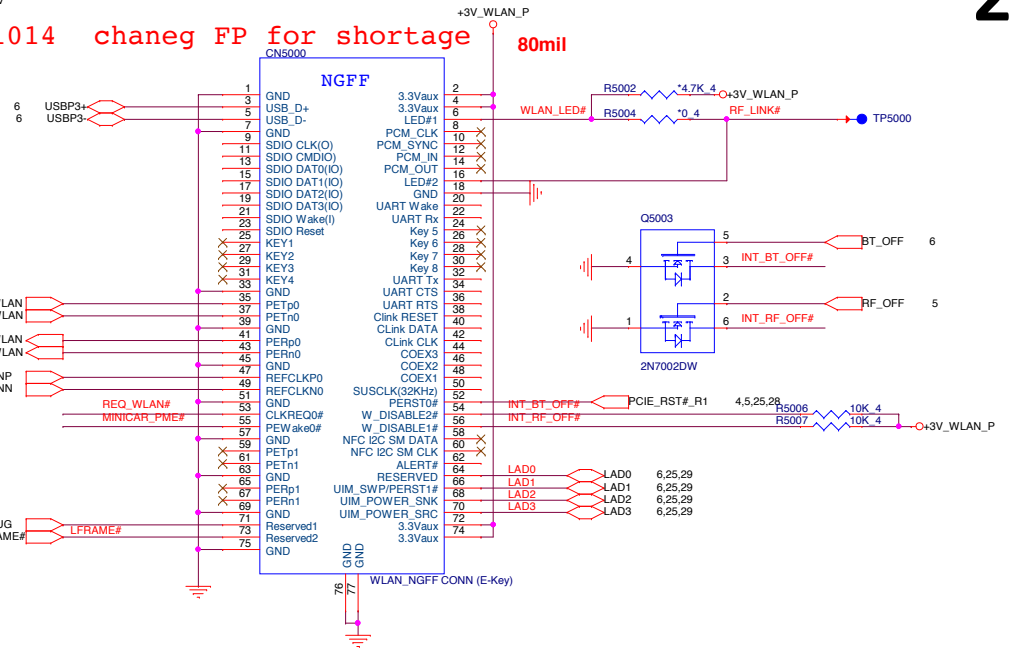

Support Wake Funct i on(Reserve)

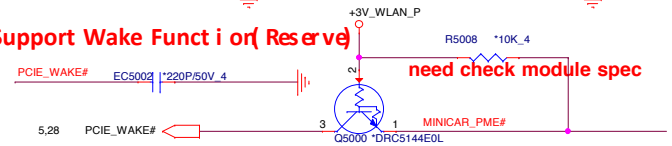

0225 : MV reserve for WLAN card level shift

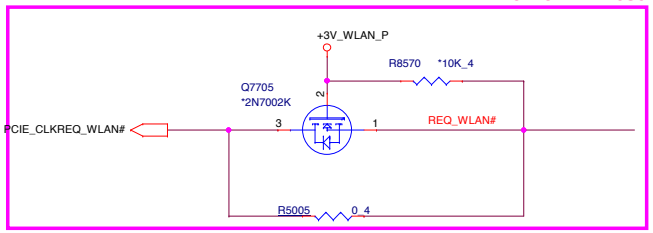

ICT review

PAD/HOLE

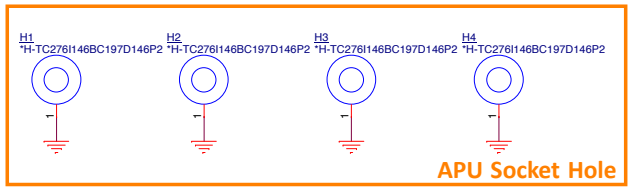

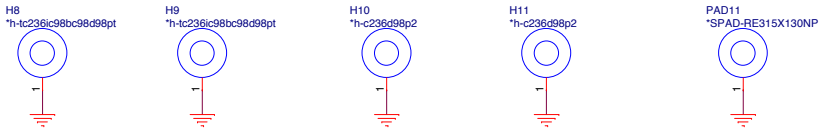

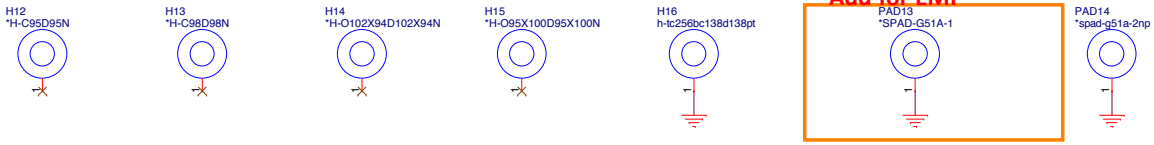

1118 change to M2 MBZRQ001010

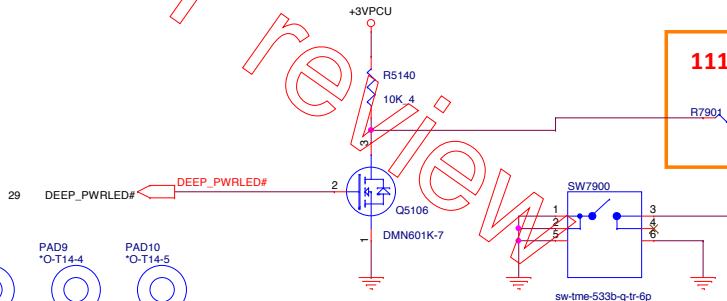

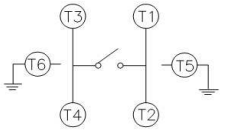

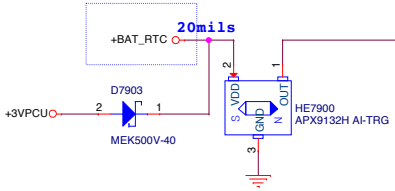

NB5	PROJECT : G51A Quanta Computer Inc.	
Size Custom	Document Number <Doc>	Rev 2A
Date: Monday, April 11, 2016	Sheet 26 of 41	

EMI CAPs

Place on +VIN Path

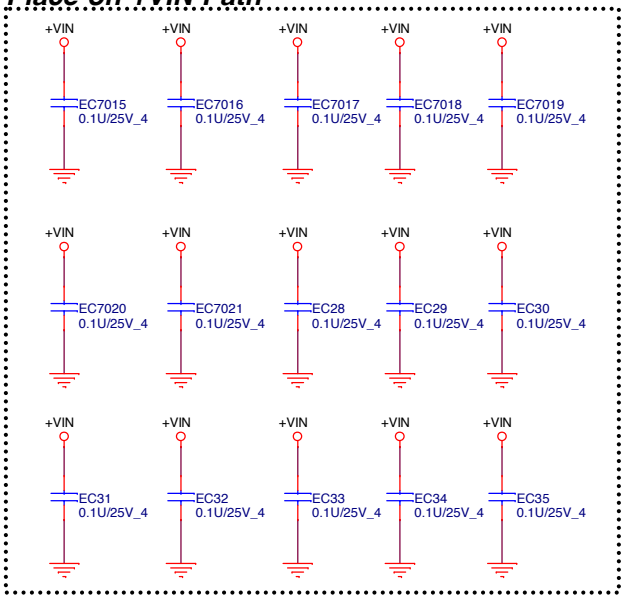

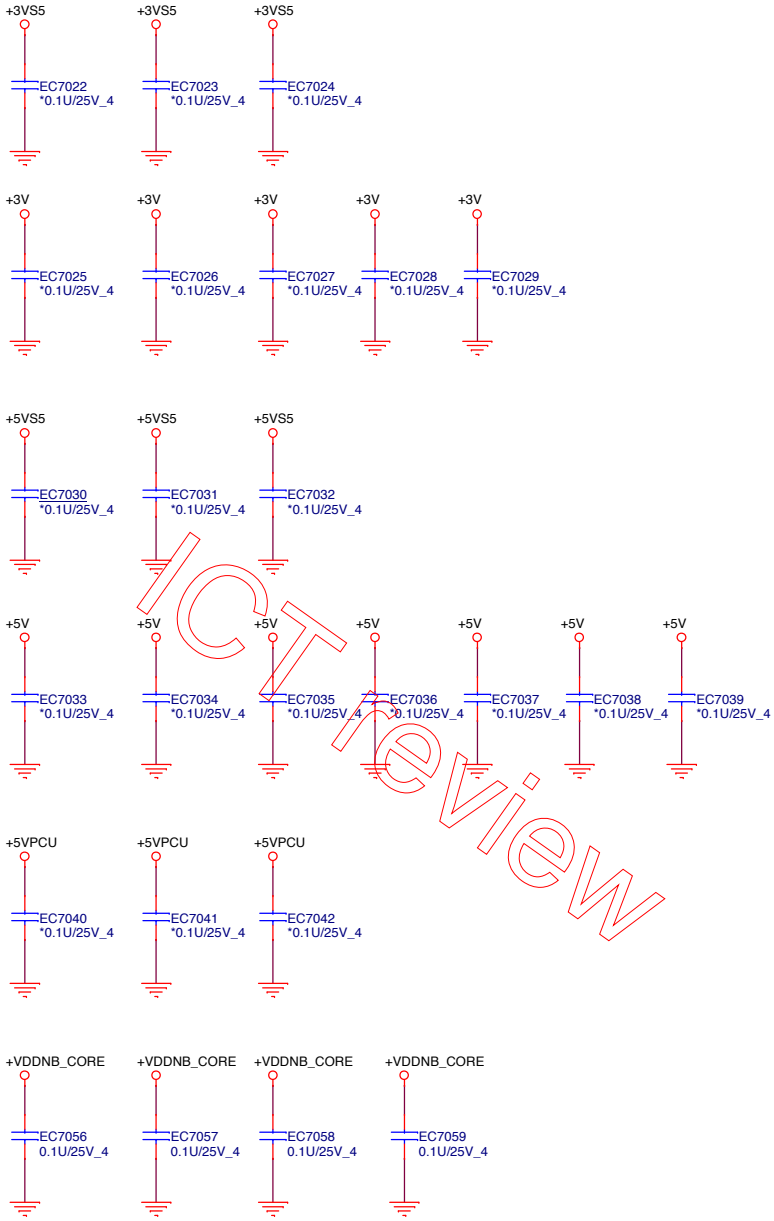

ICT review

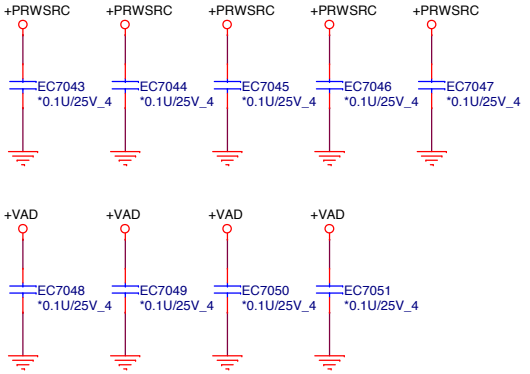

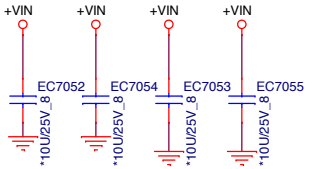

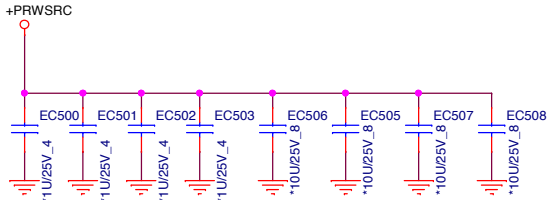

4,5,6,7,10,11,20,21,22,23,24,25,26,28,29,35,37,39 +3V

NB5

PROJECT : G51A
Quanta Computer Inc.
PS8527A

Size	Document Number	Rev
	EMI Cap	
Date: Monday, April 11, 2016	Sheet 27 of 41	

LAN & RJ45

* Place Cq,Cr for RTL8166EH
close to each VDD10 pin-- 30(reserved)

* Place Ce,Cd for RTL8166EH
close to each VDD10 pin-- 8 , 30

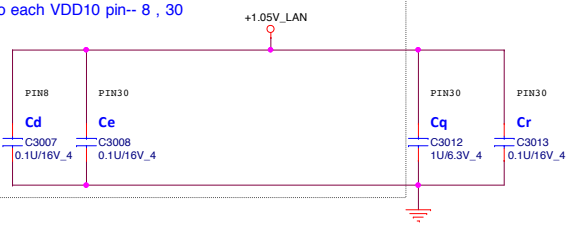

* Place Ci and Ck, close to each VDD33 pin-- 23, 32 for RTL8166EH

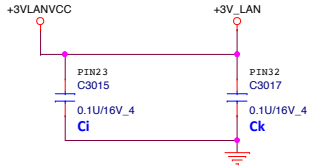

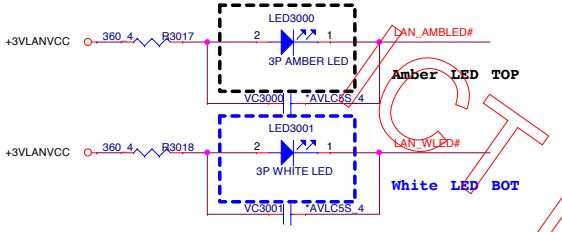

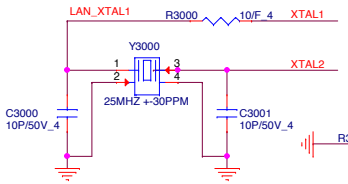

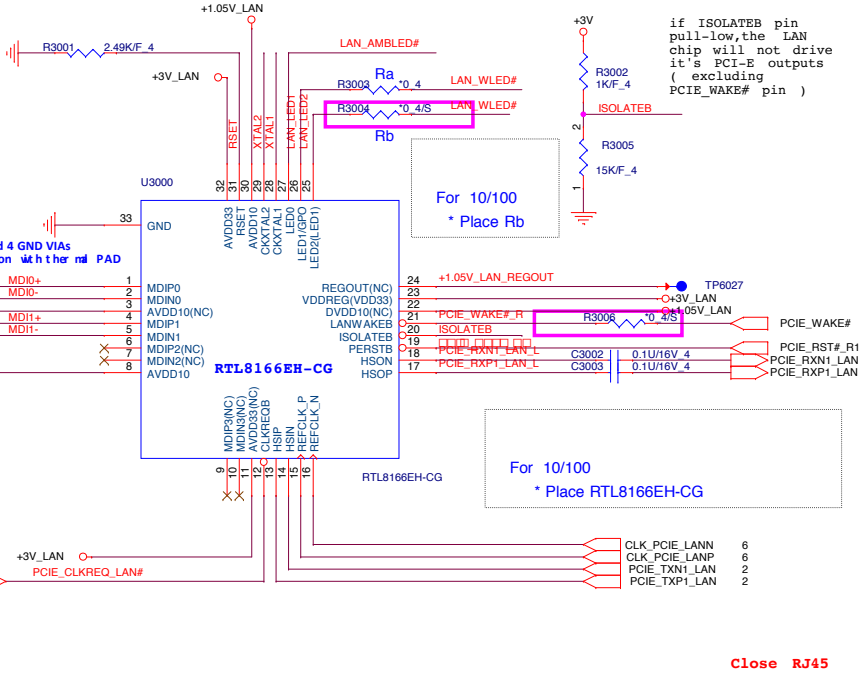

Close RJ45

For 10/100 :Ua

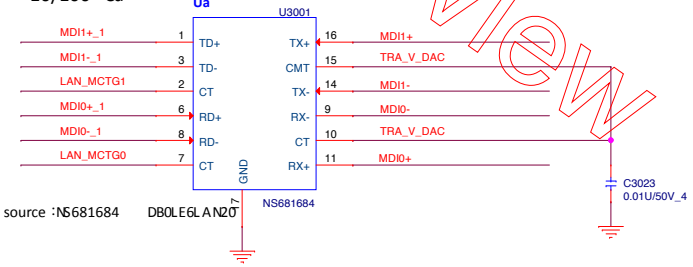

1st source :NS681684 DB0LE6LAN20

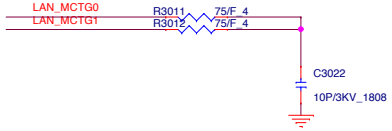

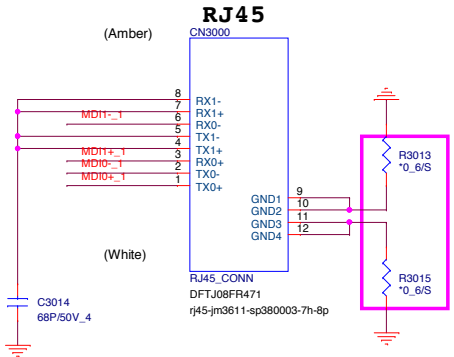

CT review

NB5

PROJECT : G51A
Quanta Computer Inc.

Size	Document Number	Rev
Custom	LAN RTL8166EH-CG/RJ45	1A
Date: Monday, April 11, 2016	Sheet 28 of 41	

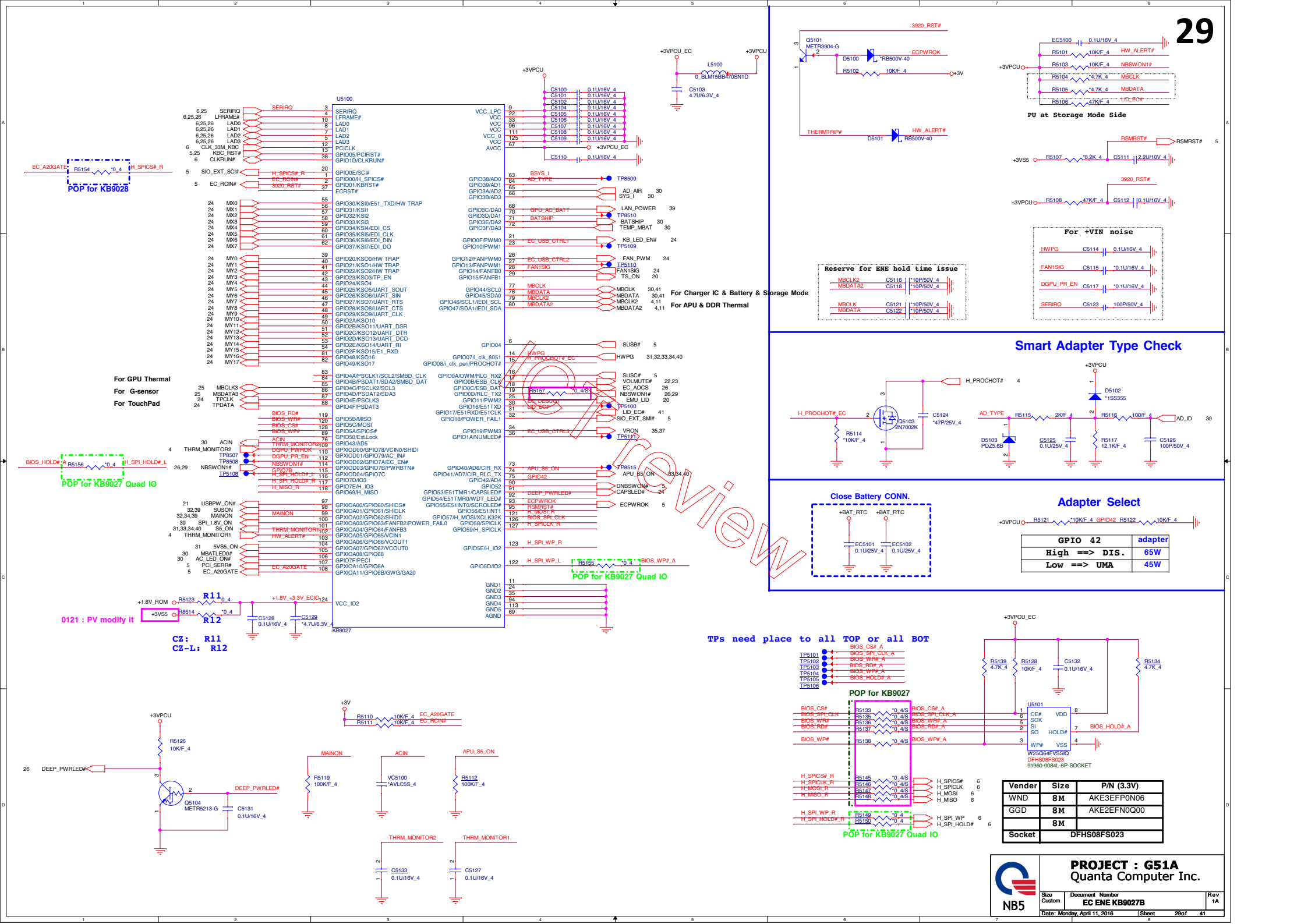

Vender	Size	P/N (3.3V)
WND	8M	AKE3EFP0N06
GGD	8M	AKE2EFN0Q00
	8M	
Socket	DFHS08FS023	

Review

NB5

PROJECT : G51A
Quanta Computer Inc.

Size	Document Number	Rev
Custom	EC ENE KB9027B	1A
Date: Monday, April 11, 2016	Sheet 29of 41	

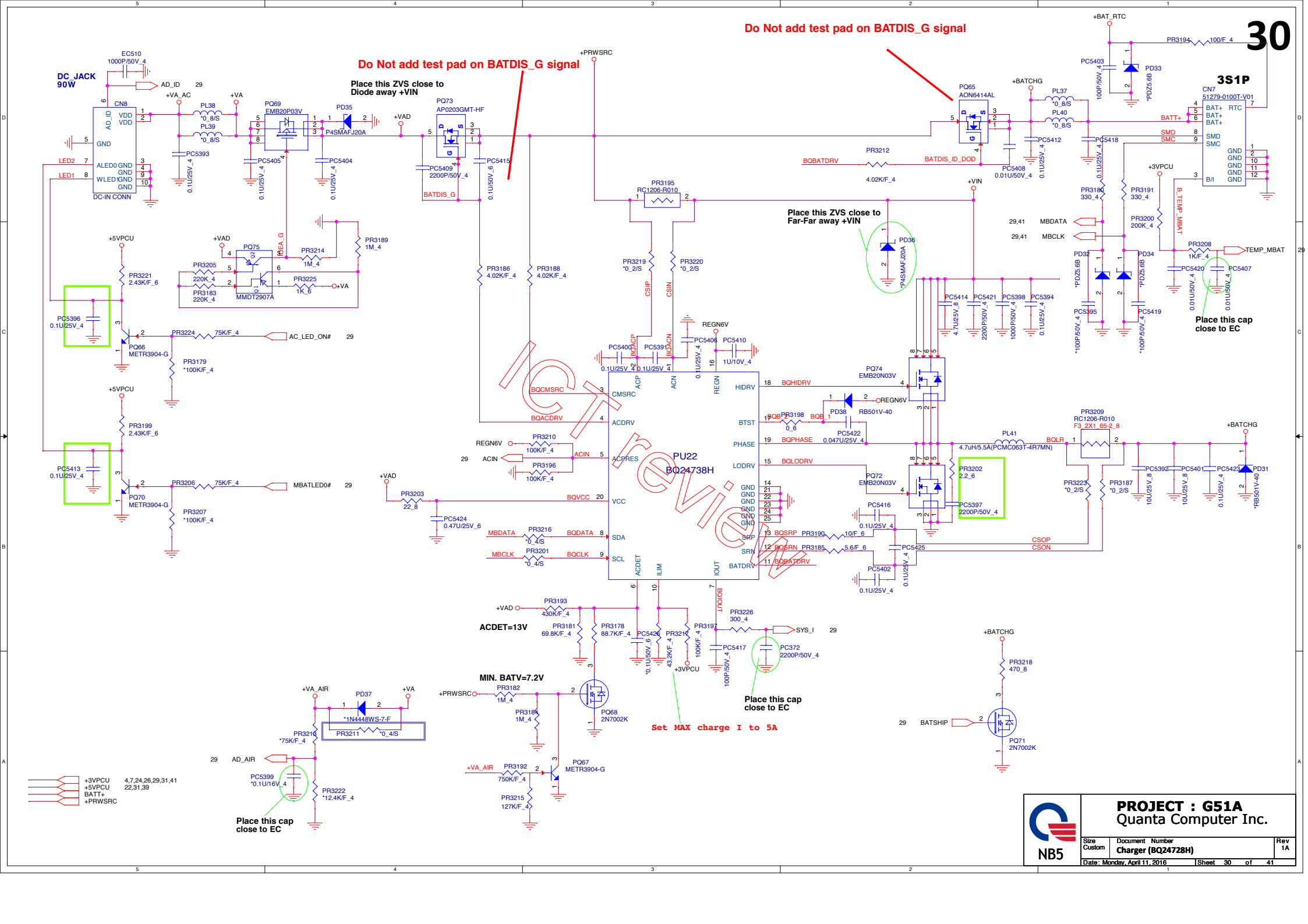
30
Do Not add test pad on BATDIS_G signal
Do Not add test pad on BATDIS_G signal
DC_JACK 90W
DC-IN CONN
Place this ZVS close to Diode away +VIN
Place this ZVS close to Far-Far away +VIN
Place this cap close to EC
Place this cap close to EC
Place this cap close to EC
PU22 BQ24738H
ACDET=13V
MIN. BATV=7.2V
Set MAX charge I to 5A
3S1P
PROJECT : G51A
Quanta Computer Inc.
NB5
Charger (BQ24728H)
Date: Monday, April 11, 2016
Sheet 30 of 41
Rev 1A
Size Custom
Document Number
+3VPCU 4,7,24,26,29,31,41
+5VPCU 22,31,39
BATT+
+PRWSRC

DC/DC +3VS5/+5VS5

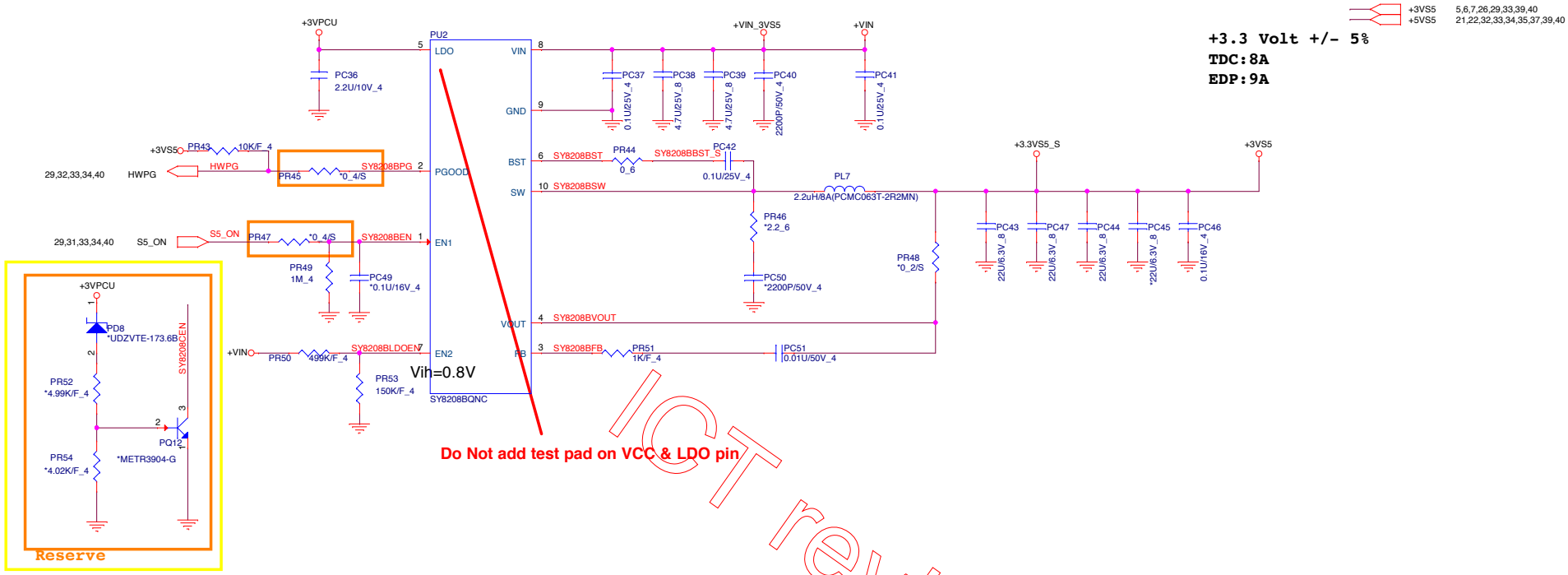

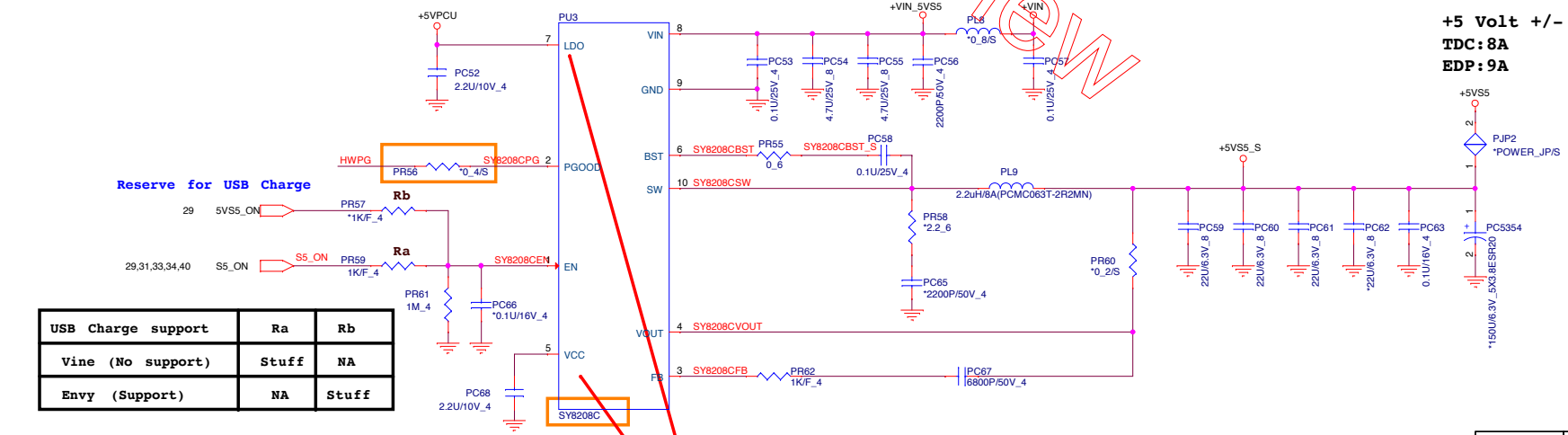

USB Charge support	Ra	Rb
Vine (No support)	Stuff	NA
Envy (Support)	NA	Stuff

ICT review

NB5

PROJECT : G51A
Quanta Computer Inc.

Size	Document Number	Rev
Custom	3/5VS5 (SY8208B/SY8286C)	1A
Date: Monday, April 11, 2016	Sheet 31of 41	

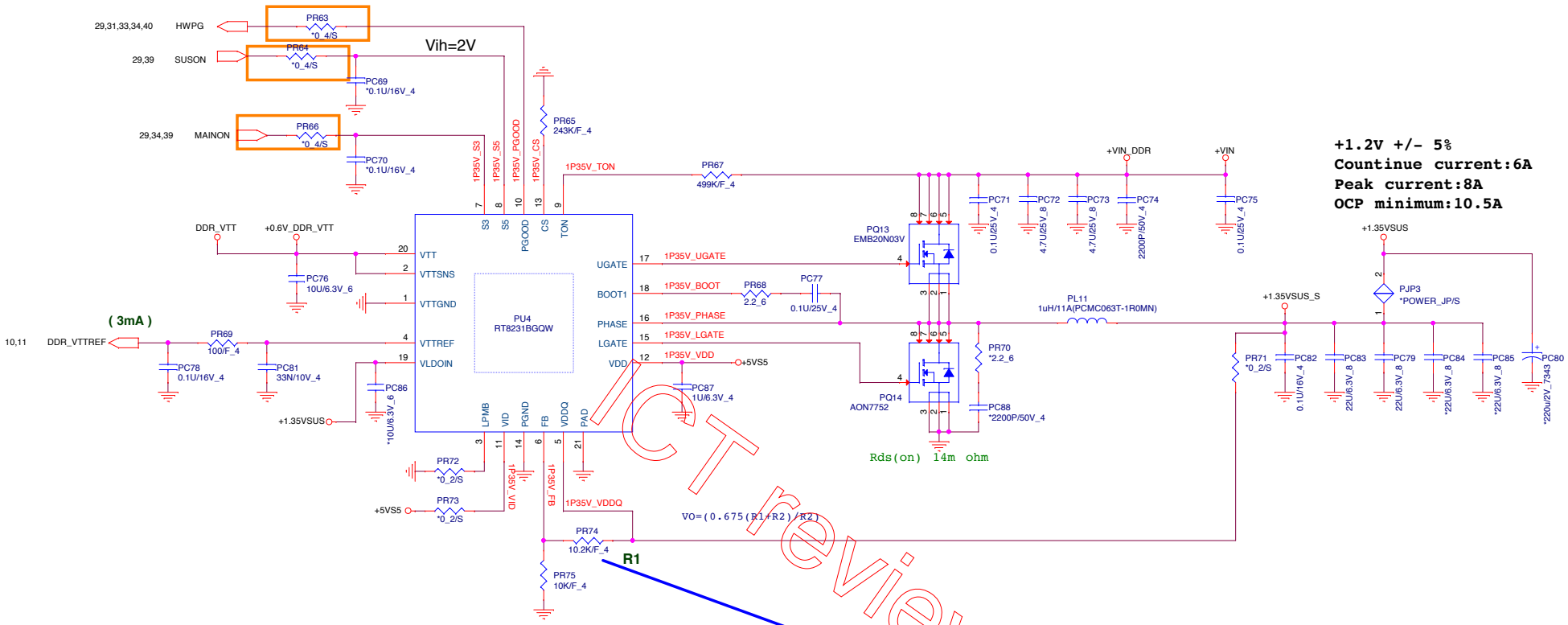

ICT review

	R1		
DDR3L	10.2K	CS31022FB17	1.35V
DDR4	7.87K	CS27872FB13	1.2V

NB5	PROJECT : G51A Quanta Computer Inc.	
Size	Document Number DDR4/2.5VSUS (RT8231B)	Rev 1A
Date: Monday, April 11, 2016	Sheet 32of 41	

+1.5V +/- 5%
TDC:1A

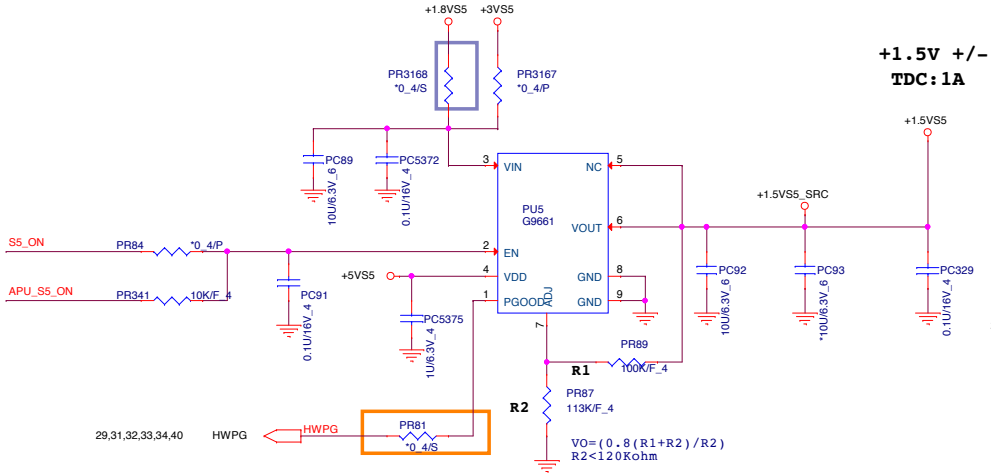

+0.95V +/- 5%
TDC:1A

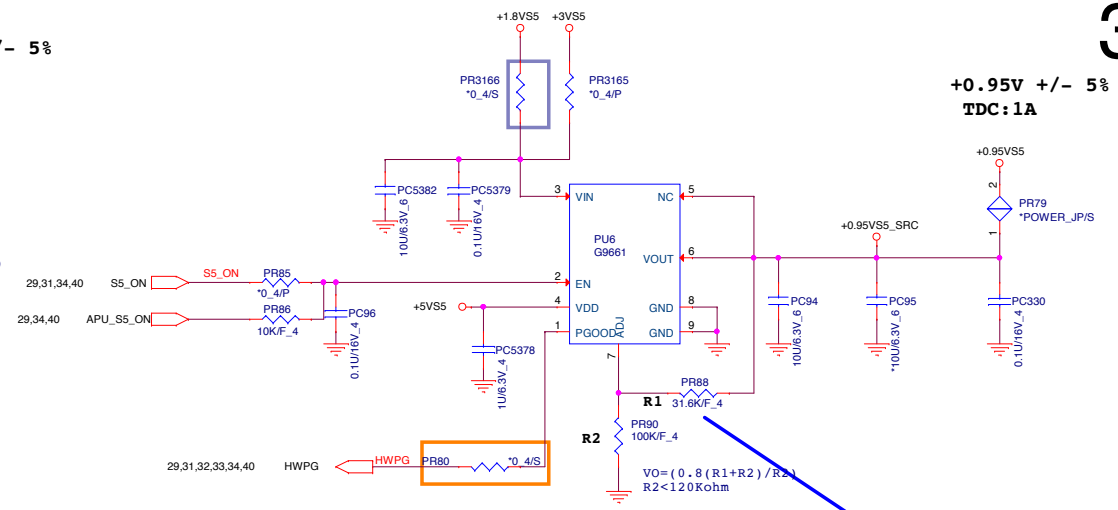

	R1		
Carrizo-L & Stoney	18.7K	CS31872FB19	0.95V
Bristol & Carrizo	31.6K	CS33162FB14	1.05V

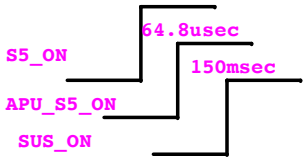

Bristol VDDP=1.05V
Stoney VDDP=0.95V

ICT review

NB5

PROJECT : G51A
Quanta Computer Inc.

Size	Document Number	Rev
Custom	+0.95VS5/1.5VS5/0.775VS5	1A

Date: Monday, April 11, 2016 | Sheet 33 of 41

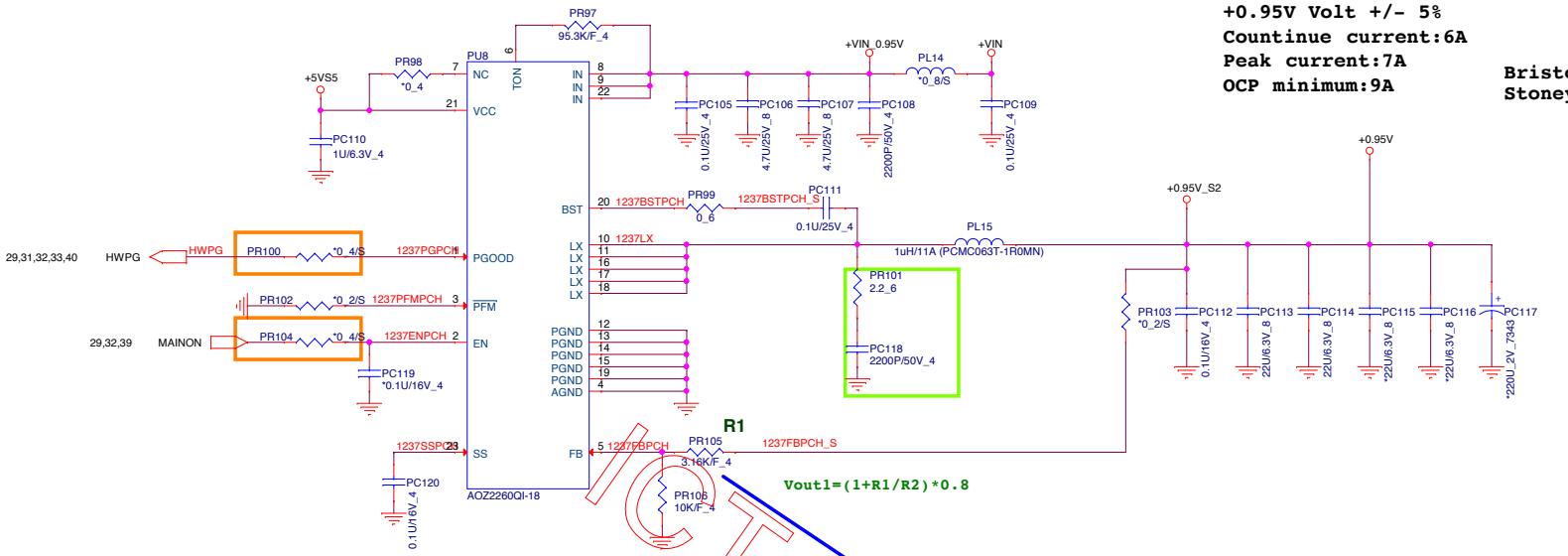

+0.95V Volt +/- 5%
Countinue current:6A
Peak current:7A
OCP minimum:9A

Bristol VDDP=1.05V
Stoney ,CZ&CZ-L VDDP=0.95V

Vo	Rton
0.95V	82k
1V	84.5k
1.05V	95.3k
1.35V	113k
1.5V	127k

	R1		
Carrizo-L & Stoney	1.91K	CS21912FB13	0.95V
Bristol & Carrizo	3.16K	CS23162FB04	1.05V

1.8VS5 +/- 3%
TDC:3A
EDP:4A

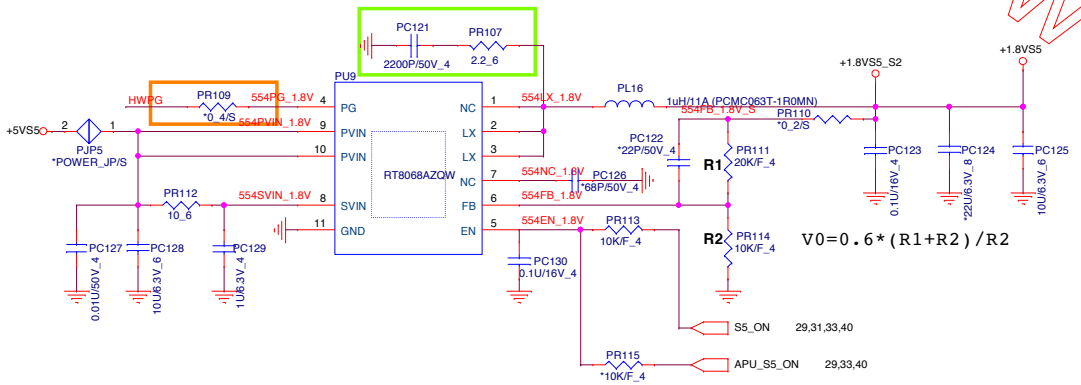

ICT review

NB5

PROJECT : G51A
Quanta Computer Inc.

Size	Document Number	Rev
Custom	+0.95V (AOZ1267)/+1.8VS5	1A
Date: Monday, April 11, 2016	Sheet 34of 41	

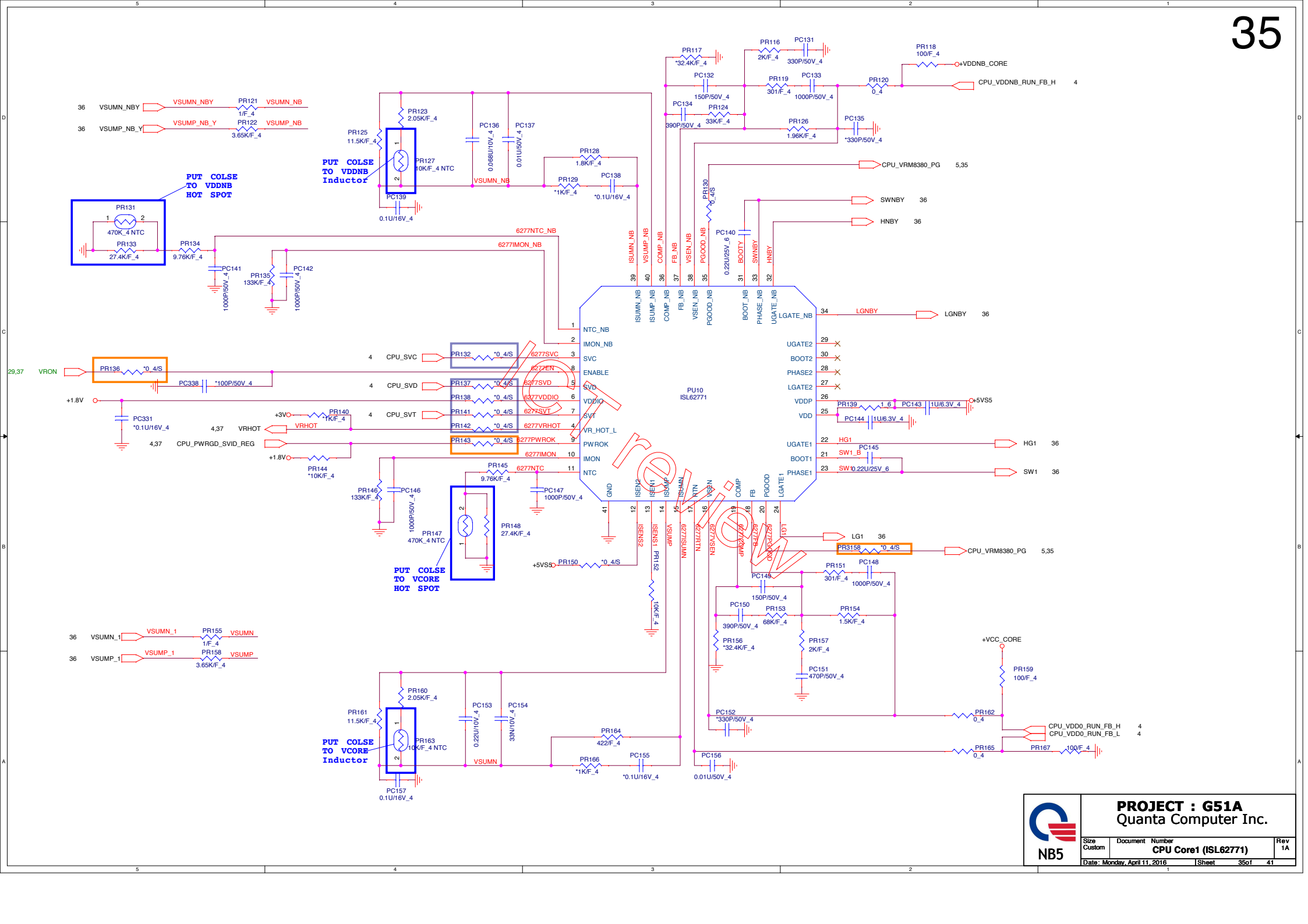

Intel Confidential

NB5	**PROJECT : G51A** Quanta Computer Inc.
Size: Custom	Document Number: CPU Core1 (ISL62771)
Rev: 1A	
Date: Monday, April 11, 2016	Sheet: 35of 41

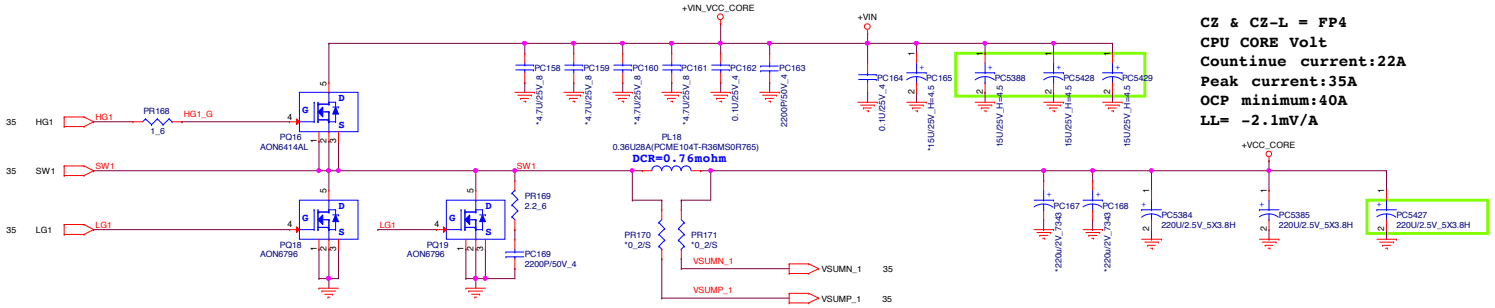

CZ & CZ-L = FP4
CPU CORE Volt
Countinue current:22A
Peak current:35A
OCP minimum:40A
LL= -2.1mV/A

ICT review

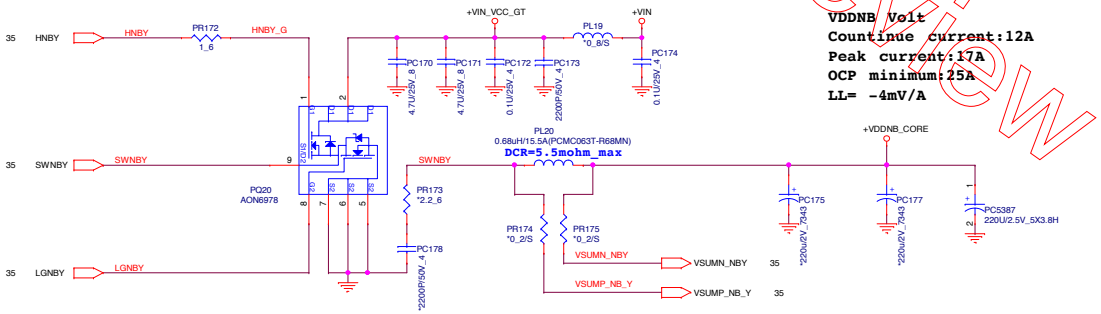

VDDNB Volt
Countinue current:12A
Peak current:17A
OCP minimum:25A
LL= -4mV/A

NB5	**PROJECT : G51A** Quanta Computer Inc.		
	Size: Custom	Document Number: CPU Core2	Rev: 1A
	Date: Monday, April 11, 2016	Sheet: 36of 41	

CPU	Page 37 & Page 38 & Page 40
Carrizo	Stuff
Carrizo-L	Unstuff

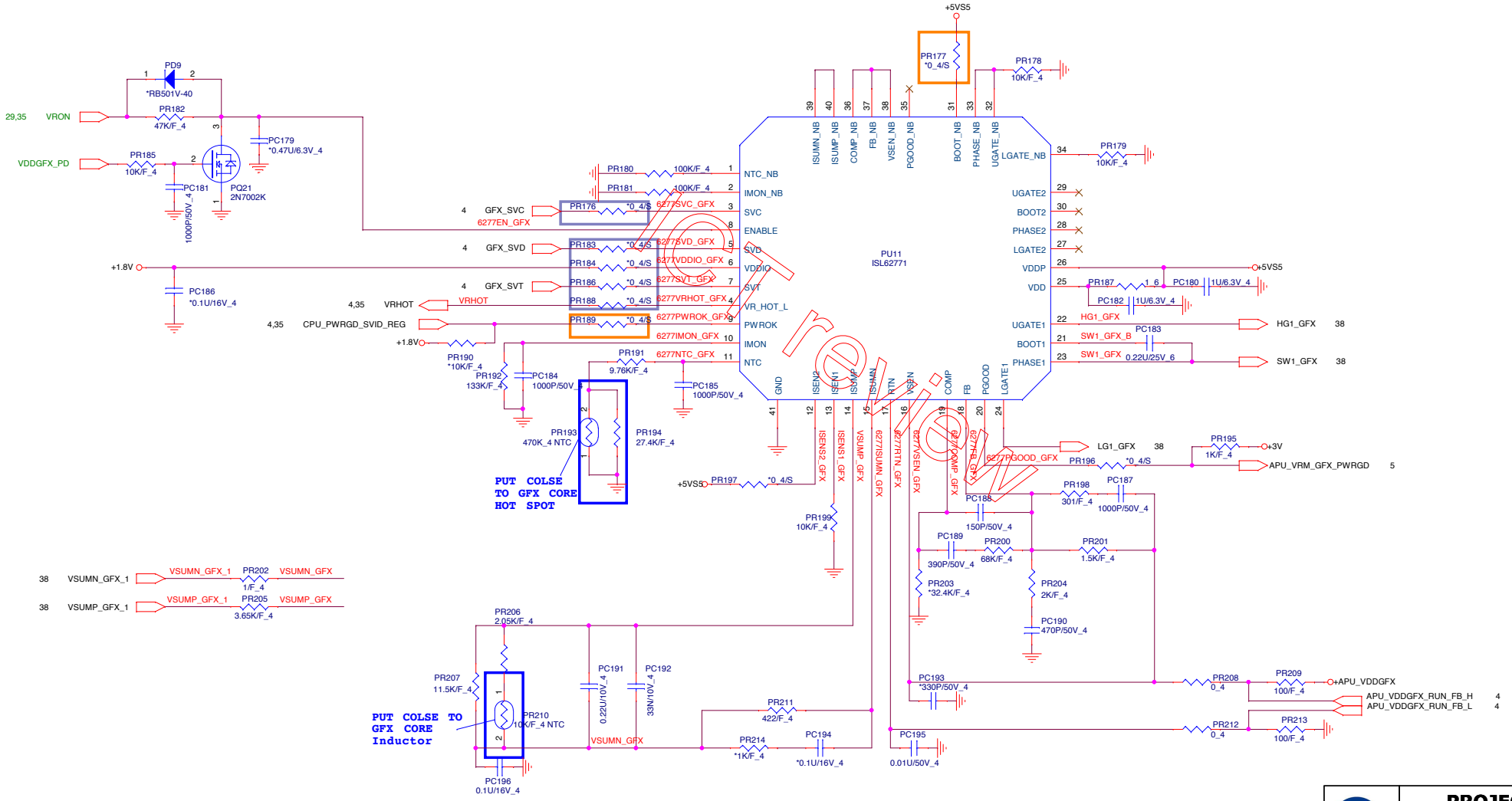

Intel Confidential

NB5

PROJECT : G51A
Quanta Computer Inc.

Size	Document Number	Rev
Custom	GFX Core1 (ISL62771)	1A
Date: Monday, April 11, 2016	Sheet 37 of 41	

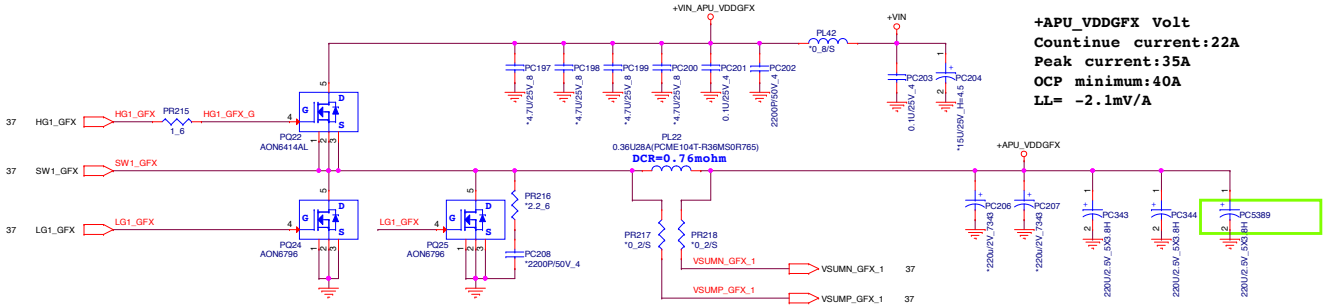

+APU_VDDGFX Volt
Countinue current:22A
Peak current:35A
OCP minimum:40A
LL= -2.1mV/A

ICT review

NB5	**PROJECT : G51A** Quanta Computer Inc.	
Size: Custom	Document Number: **GFX Core2**	Rev: 1A
Date: Monday, April 11, 2016	Sheet 38 of 41	

4,5,6,7,10,11,20,21,22,23,24,25,26,28,29,35,37 +3V
20,21,22,23,24 +5V
20,24,30,31,32,34,36,38,40 +VIN
5,6,7,26,29,31,33,40 +3VS5
21,22,31,32,33,34,35,37,40 +5VS5
28 +3VLANVCC

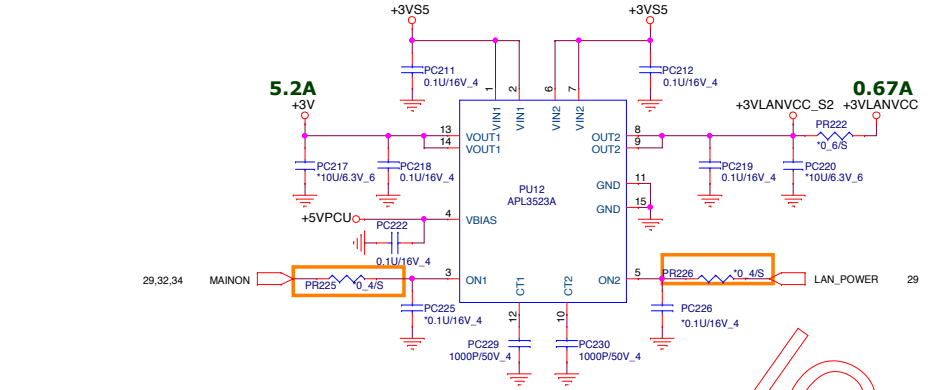

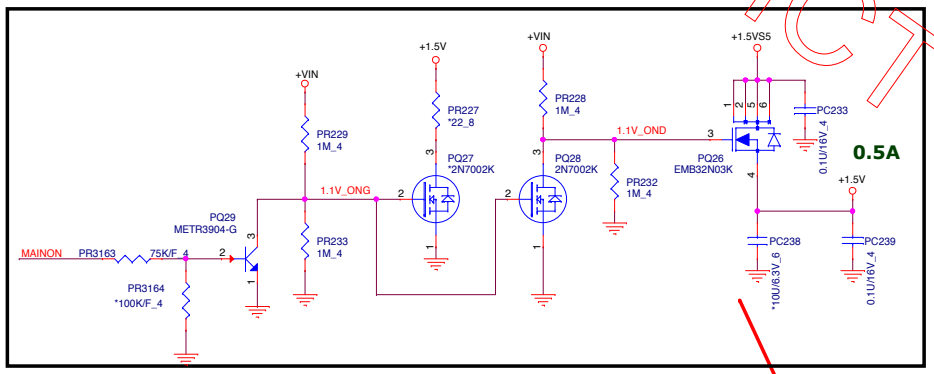

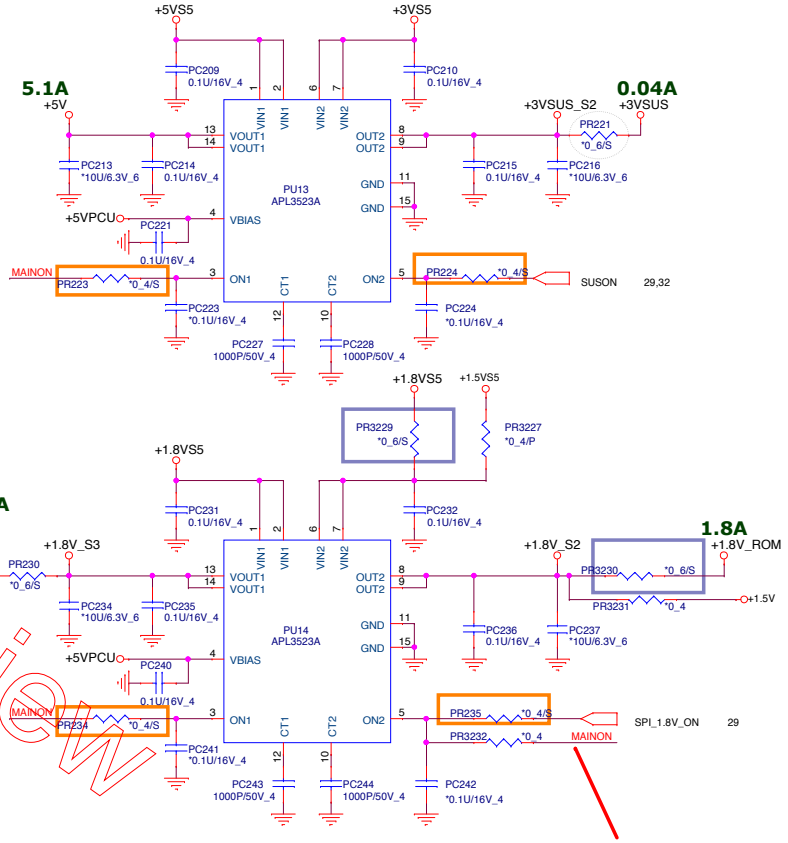

ICT review

Carrizo-L; Unstuff

Carrizo	Stuff PR235 ,PR3230,PR3229
Carrizo-L	stuff PR3232 ,PR3231,PR3227

NB5

PROJECT : G51A
Quanta Computer Inc.

Size	Document Number	Rev
Custom	Load switch IC (APL3523A)	1A
Date: Monday, April 11, 2016	Sheet 39 of 41	

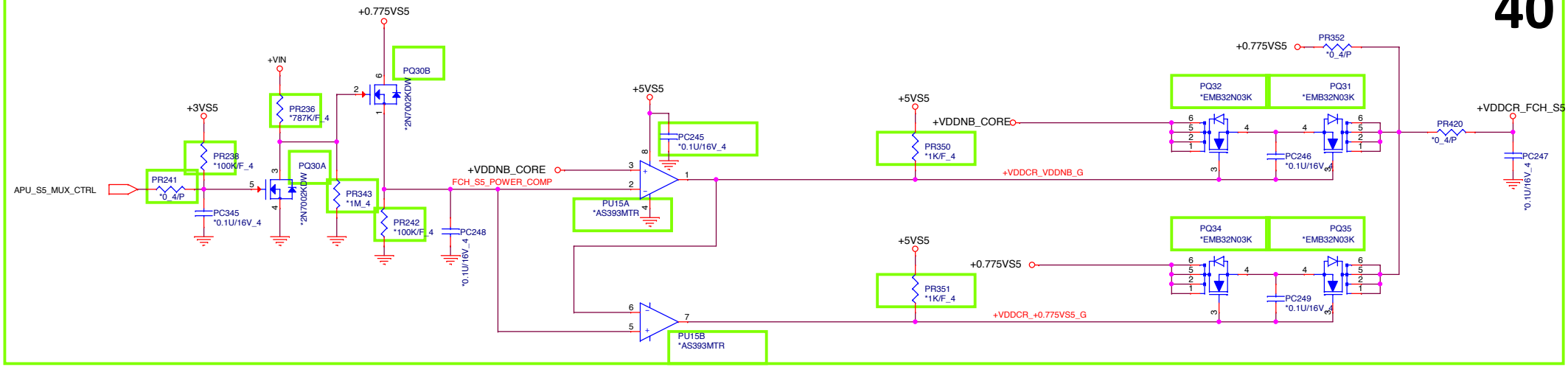

Carrizo-L PC5328 stuff

EN	SEL	VIN1	Vo
0	X	0.775V~1.2V	0V
1	0	<0.775V	0.775V
1	0	>0.775V	VDDNB
1	1	0.775V~1.2V	VDDNB

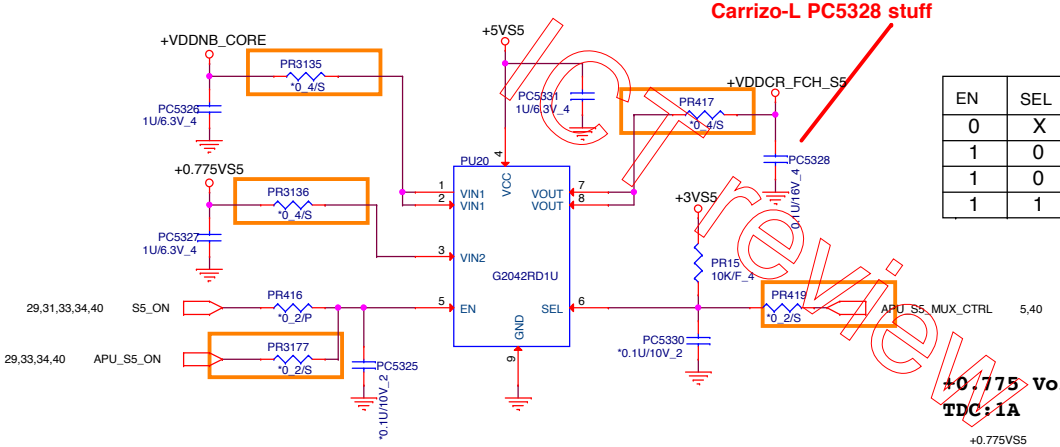

+0.775 Volt +/- 5%
TDC:1A

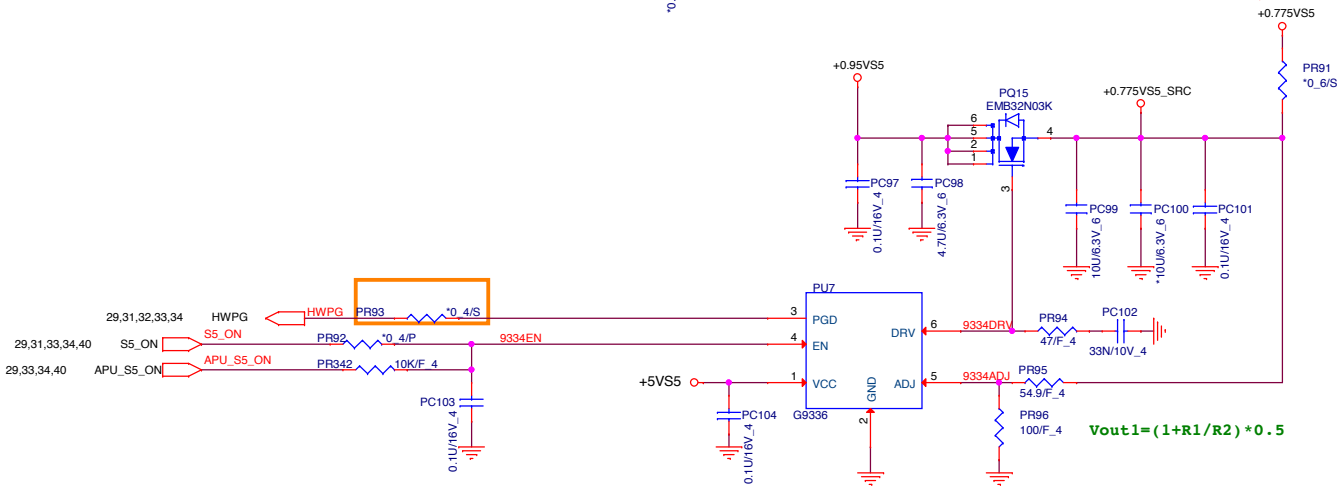

Confidential

NB5

PROJECT : G51A
Quanta Computer Inc.

Size	Document Number	Rev
Custom	Load switch IC (G5018)	1A

Date: Monday, April 11, 2016 | Sheet 40of 41

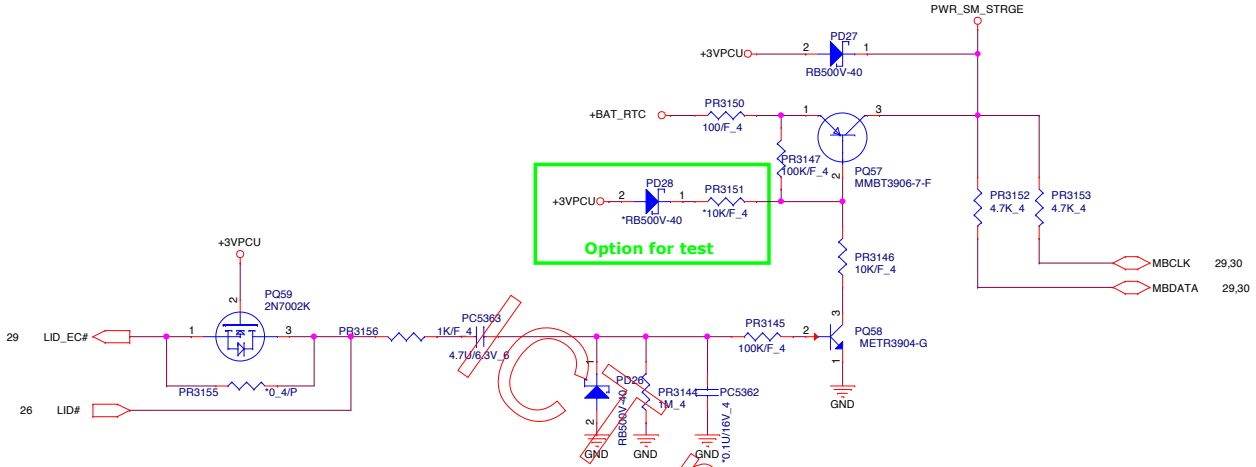

PC review

NB5	**PROJECT : G51A** Quanta Computer Inc.	
Size: Custom	Document Number: **Storage Mode**	Rev: 1A
Date: Monday, April 11, 2016	Sheet: 41of 41	