Title	Page
Cover Sheet	1
Block Diagram	2
Clock Distribution	3
CPU-CLK/Control	4
CPU-PEG/MISC	5
CPU-Memory	6
CPU-GND/Power	7
CPU-GND	8
Reserve	9
DDR III XMM 3	10
Reserve	11
DDR III XMM 1	12
PCH-PCIE/DMI/USB/CLK	13
PCH-SATA/HOST/GPIO	14
PCH-DDI/VGA	15
PCH-SMB/LPC/AUDIO/RTC	16
PCH-Power	17
PCH-GND	18
SIO12-NPCD379H	19
KB / MS / COM	20
SIO- PULL UP/DOWN/PS_ON	21
Reserve	22
Display CONN	23
VGA CONN	24
PCIE x16 Slot	25
PCIE x1 Slots	26
SATA/LED	27
Gigabit LAN RTL8111HSH-CG	28
LAN Connector	29
Azalia Codec-ALC 221-VB	30
AUDIO CONNECTOR	31
Rear USB POWER	32
Front USB POWER	33
USB2.0	34
Rear USB3.0	35
Front USB3.0	36
Header/ SPI	37
FAN /TPM	38
DDR Power	39
VRD12.5-ISL95816HRZ 3 Phase	40
VCCP-1	41
VCCP-2	42
PCH & ME Core Power	43
ATX/F_Panel/EMI	44
EMI cap	45
CPU/PCHDMI XDP	46
Manual & Option Parts	47
Reserve	48
Reserve	49
PON	50
Pwrok/Reset	51
Power Map	52
GPIO Table	53,54,55
History	56,57,58,59

https://vinafix.com

HP Modena REV A (HP SCH P/N:803190-000)

(220 mm X 195 mm)

(MS-G013 1.0)

HP P/N	Description
803189-001	MBD, MODENA, SHARK BAY H81, SFF
803189-501	ASSY MBD MODENA SHB H81 SFF W8Std
803189-601	ASSY MBD MODENA SHB H81 SFF W8Pro
803189-701	ASSY MBD MODENA SHB H81 SFF WES8

SSID: 8105

CPU:

Intel Haswell Processor

System Chipset:

Intel Lynx Point Chipset

OnBoard Chipset:

AZALIA Codec: Realtek ALC 221-VB
LAN: Realtek RTL8111HSH-CG 10/100/1000 NIC
SIO: Nuvoton NPCD379H
Flash ROM: 64 Mb

Main Memory:

DDRIII (1333/1600MHz) * 2 (Dual Channel)

Expansion Slots:

PCI Express (X16) Slot * 1
PCI Express (X1) Slot * 1

PWM:

Controller: ISL95816HRZ
Controller: NCP1587GDR2G

Other:

SATA *2
USB3.0 *2 (Front*2)
USB2.0 *7 (Rear*6 Intrenal*1)
DP PORT*1
VGA PORT *1
COM PORT *1

BOM DISTRIBUTION RULE
MODENA
(BOM)

HP Restricted Secret

HEWLETT PACKARD

HP RESTRICTED
THIS DOCUMENT CONTAINS CONFIDENTIAL PROPRIETARY INFORMATION THAT IS HEWLETT-PACKARD (HP). DO NOT DISCLOSE TO OR DUPLICATE OTHERS EXCEPT AS AUTHORIZED BY HP.

DRAWN BY	MICRO-STAR INT'L CO.,LTD	
Title	Cover Sheet	
Size: Custom	Document Number: HP SCH P/N:803190-000(MSI MS-G013)	Rev: A
Date: Thursday, January 17, 2019	Sheet 1 of 59	

https://vinafix.com

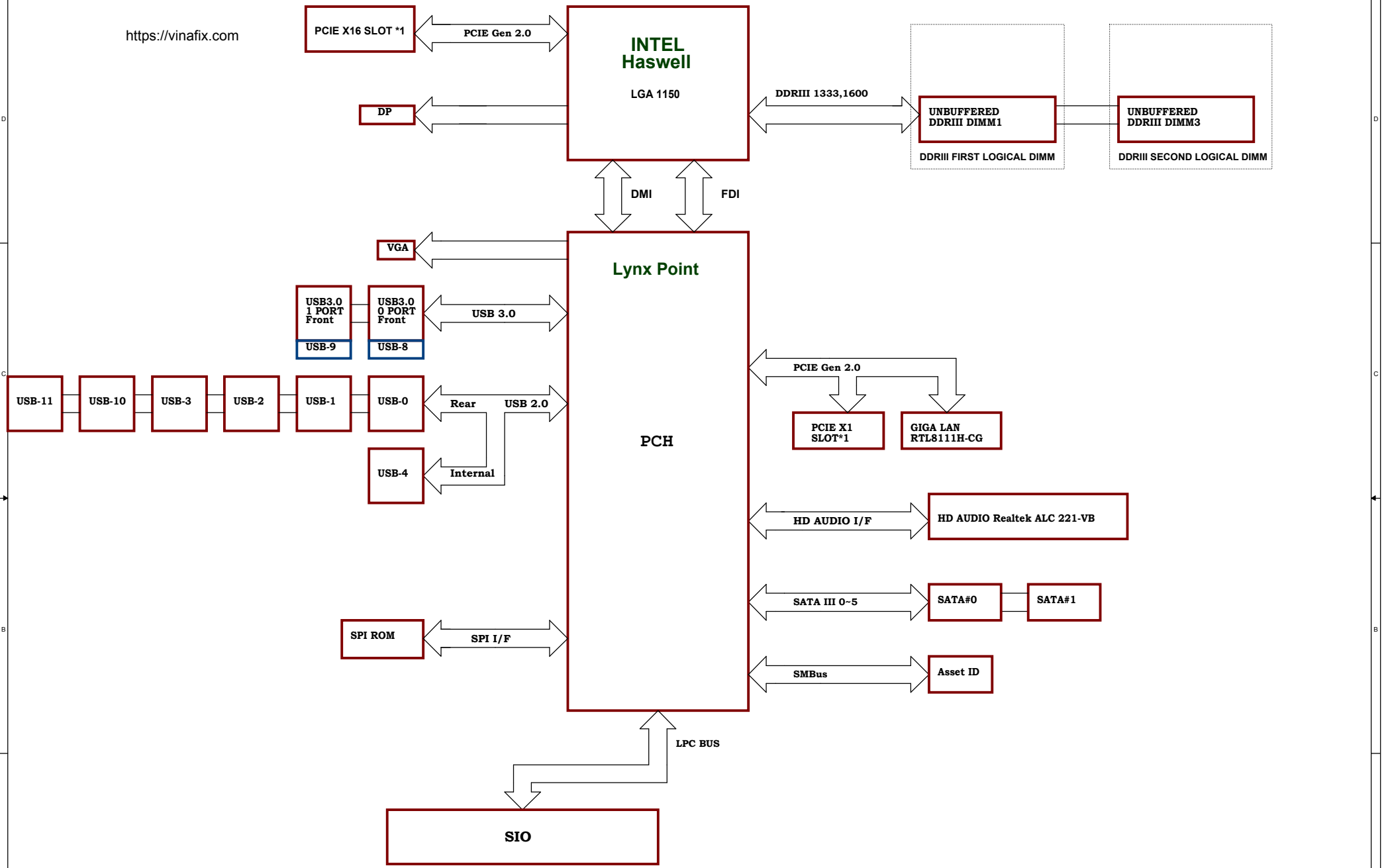

HP Restricted Secret

HEWLETT PACKARD

HP RESTRICTED

THIS DOCUMENET CONTAINS CONFIDENTIAL PROPRIETARY INFORMATION THAT IS HEWLETT-PACKARD (HP). DO NOT DISCLOSE TO OR DUPLICATE OTHERS EXCEPT AS AUTHORIZED BY HP.

DRAWN BY MICRO-STAR INT'L CO.,LTD

Title: Block Diagram

Size	Document Number	Rev
Custom	HP SCH P/N:803190-000(MSI MS-G013)	A

Date: Thursday, January 17, 2019 Sheet 2 of 59

https://vinafix.com

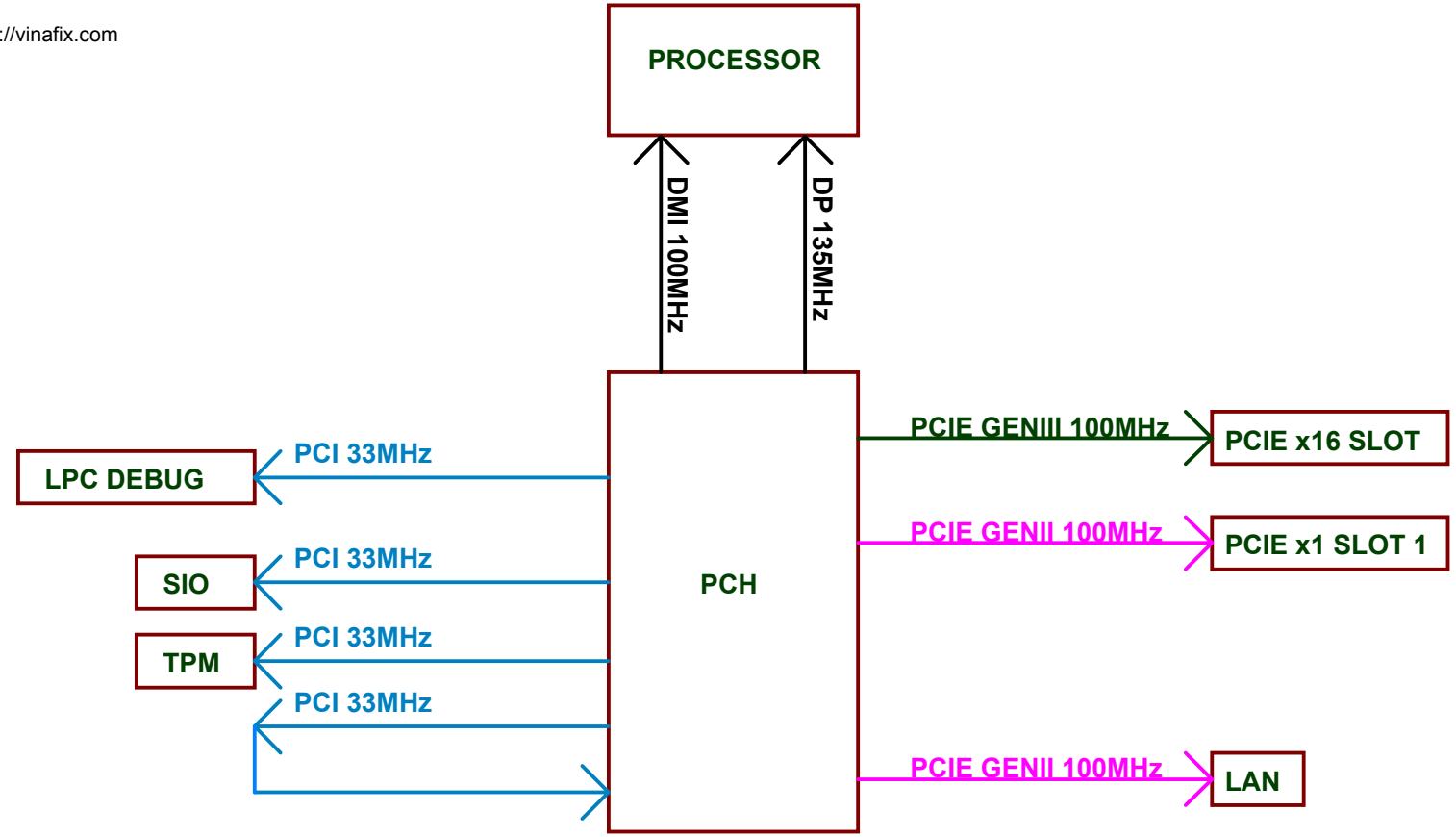

HP Restricted Secret

HEWLETT PACKARD

HP RESTRICTED

THIS DOCUMENET CONTAINS CONFIDENTIAL PROPRIETARY INFORMATION THAT IS HEWLETT-PACKARD (HP). DO NOT DISCLOSE TO OR DUPLICATE OTHERS EXCEPT AS AUTHORIZED BY HP.

DRAWN BY	MICRO-STAR INT'L CO.,LTD
Title	Clock Distribution
Size: Custom	Document Number: HP SCH P/N:803190-000(MSI MS-G013)
Rev	A
Date:	Thursday, January 17, 2019
Sheet	3 of 59

https://vinafix.com

XU1E
I
CRITICAL
5 OF 9

13 CLK100M_CPU_P — V5 BCLK_0
13 CLK100M_CPU_N — V4 BCLK#_0
PWR_DEBUG — N40 — PWR_DEBUG 46

40 SCLK — C38 VIDSCLK
40 SDIO — C37 VIDSOUT
40 H_VIDALERT# — R175 I 44.2/1%/4 — VIDALERT# — B37 VIDALERT#
TESTLO_P6 — P6 — CPU_P6 — R435 I 49.9/1%/4
TESTLO_N5 — N5 — CPU_N5 — R434 I 49.9/1%/4

16,46 H_PWRGD — AB35 PWRGOOD
16 MEM_PWRGD — AK21 SM_DRAMPWROK
16 CPURST#_R — R842 I 0/4 — CPURST# — M39 RESET#
DPLL_REF_CLK# — W6 — CLK135M_DPNS_N 13
DPLL_REF_CLK — W5 — CLK135M_DPNS_P 13

14 PM_SYNC — P36 PM_SYNC
14,19 H_PECI — N37 PECI
27 H_CATERR# — M36 CATERR#
19,40 H_PROCHOT# — K38 PROCHOT#
14,19 H_THERMTRIP# — F37 THERMTRIP#
VCC_SENSE — E40 — CPU_VCC_SENSE 40
VSS_SENSE — F40 — CPU_VSS_SENSE 40

19,21 SKTOCC# — D38 SKTOCC#

SM_VREF — AB38 SM_VREF
SM_COMP0 — R1 SM_RCOMP0
SM_COMP1 — P1 SM_RCOMP1
SM_COMP2 — R2 SM_RCOMP2
CFG_COMP0 — H40 CFG_RCOMP0
TDO — F39 — CPU_TDO 46
TDI — F38 — CPU_TDI 46
TCK — D39 — CPU_TCK 46
TMS — E39 — CPU_TMS 46

46 H_CFG0 — AA37 CFG_0
46 H_CFG1 — Y38 CFG_1
46 H_CFG2 — AA36 CFG_2
46 H_CFG3 — W38 CFG_3
46 H_CFG4 — V39 CFG_4
46 H_CFG5 — U39 CFG_5
46 H_CFG6 — U40 CFG_6
46 H_CFG7 — V38 CFG_7
46 H_CFG8 — T40 CFG_8
46 H_CFG9 — Y35 CFG_9
46 H_CFG10 — AA34 CFG_10
46 H_CFG11 — V37 CFG_11
46 H_CFG12 — Y34 CFG_12
46 H_CFG13 — U38 CFG_13
46 H_CFG14 — W34 CFG_14
46 H_CFG15 — V35 CFG_15
46 H_CFG16 — Y37 CFG_16
46 H_CFG17 — Y36 CFG_17
46 H_CFG18 — W36 CFG_18
46 H_CFG19 — V36 CFG_19

TRST# — E37 — CPU_TRST# 46
PRDY# — L39 — XDP_CPU_PRDY# 46
PREQ# — L37 — XDP_CPU_PREQ# 46
DBR# — G40 — FP_RST# 16,44,46

BPM#_0 — G39
BPM#_1 — J39 — XDP_CPU_BPM_N0 46 / XDP_CPU_BPM_N1 46
BPM#_2 — G38 — XDP_CPU_BPM_N2 — NOBOM — TP20
BPM#_3 — H37 — XDP_CPU_BPM_N3 — NOBOM — TP26
BPM#_4 — H38 — XDP_CPU_BPM_N4 — NOBOM — TP24
BPM#_5 — J38 — XDP_CPU_BPM_N5 — NOBOM — TP23
BPM#_6 — K39 — XDP_CPU_BPM_N6 — NOBOM — TP19
BPM#_7 — K37 — XDP_CPU_BPM_N7 — NOBOM — TP28

46 H_CFG[19..0] — H_CFG[19..0]

N12-150A010-L06
AVL:N12-150A020-F02

MEM_VREF Control

VREF_CA_A — R369 I 2/4 — SM_VREF
VREF_CA_B — R361 I 2/4
C259 I 0.022u25X/4
SM_VREF_C
R375 I 24.9/1%/4

SM are length 500 mils
CFG max length 400 mils

SM_COMP0
SM_COMP1
SM_COMP2
CFG_COMP0
R168 I 49.9/1%/4
R432 I 100/1%/4
R428 I 75R1%/4
R429 I 100/1%/4

Place R189 \ R176 \ R190 near CPU

CPU_VTT
R189 I 110/1%/4
R176 I 75R1%/4
R190 NI 90.9/1%/4
40 SCLK — SCLK
40 SDIO — SDIO
40 H_VIDALERT# — H_VIDALERT#

CPU_VTT
H_PECI — R160 NI 1K/1%/4
H_CATERR# — R171 NI 1K/4
H_PROCHOT# — R163 I 51/4

R157 change to stuff (Intel WW 14)
H_PWRGD — R157 I 10K/4
CPU_TDO — R119 NI 825/4

PCH_1P05
H_THERMTRIP# — R213 NI 1K/4

CPU_RESET#

Place R139 and R147 near U7

+3.3V_AUX — R93 NI 10K/4 — Q4_C
+3.3V_AUX
16,19 PLTRST# — R54 NI 10K/4 — Q4_B — Q4 NI 2N3904
U7 NI SN74AHC1G14DBV_SC70-5
U7_4
R139 NI 178/1%/4
R841 NI 0/4 — CPURST# 46
U7_4_R
C74 NI 0.1u16X/4
R147 NI 84.5/1%/4

Place R192 \ R191 near CPU
Place R177 near CPU within 1 inch

CPU_VTT
CPU_TDI — R192 NI 51/4
CPU_TMS — R191 NI 51/4
CPU_TCK — R177 I 51/4
CPU_TRST# — R101 I 51/4

PCH_1P05
PWR_DEBUG — R154 I 150/1%/4
R161 NI 10K/4

HP Restricted Secret

HEWLETT PACKARD
HP RESTRICTED
THIS DOCUMENET CONTAINS CONFIDENTIAL PROPRIETARY INFORMATION THAT IS HEWLETT-PACKARD (HP). DO NOT DISCLOSE TO OR DUPLICATE OTHERS EXCEPT AS AUTHORIZED BY HP.

DRAWN BY: MICRO-STAR INT'L CO.,LTD
Title: CPU-CLK/Control
Size: Custom
Document Number: HP SCH P/N:803190-000(MSI MS-G013)
Rev: A
Date: Thursday, January 17, 2019
Sheet 4 of 59

https://vinafix.com

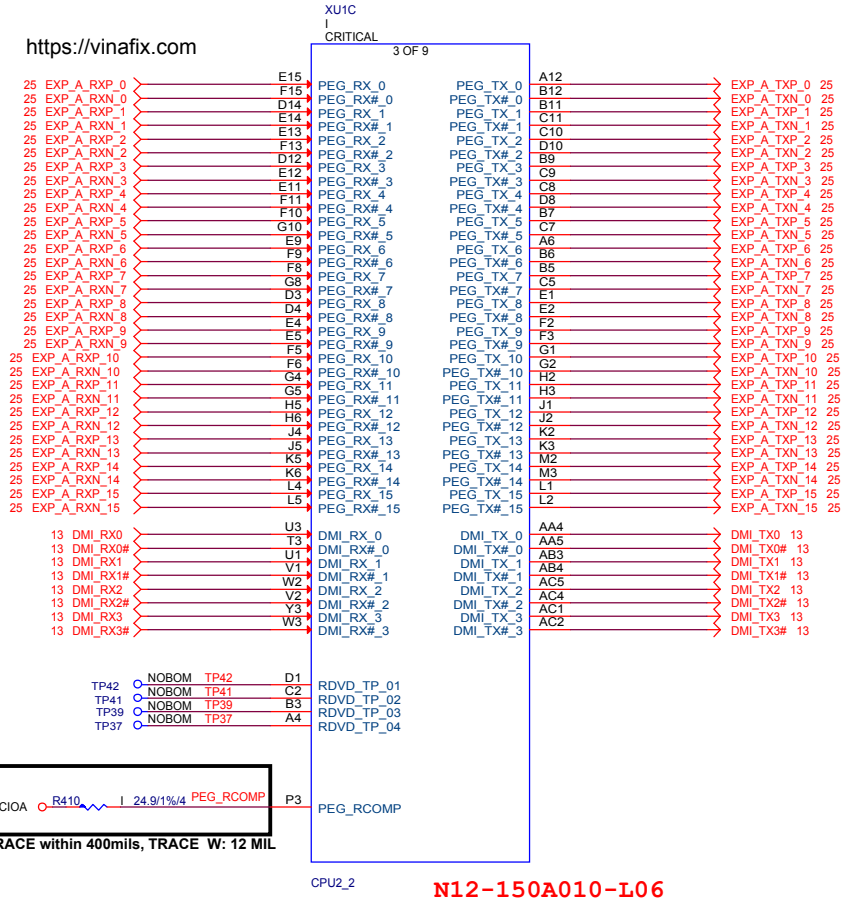

COLSE TO cpu TRACE within 400mils, TRACE W: 12 MIL

N12-150A010-L06
AVL:N12-150A020-F02

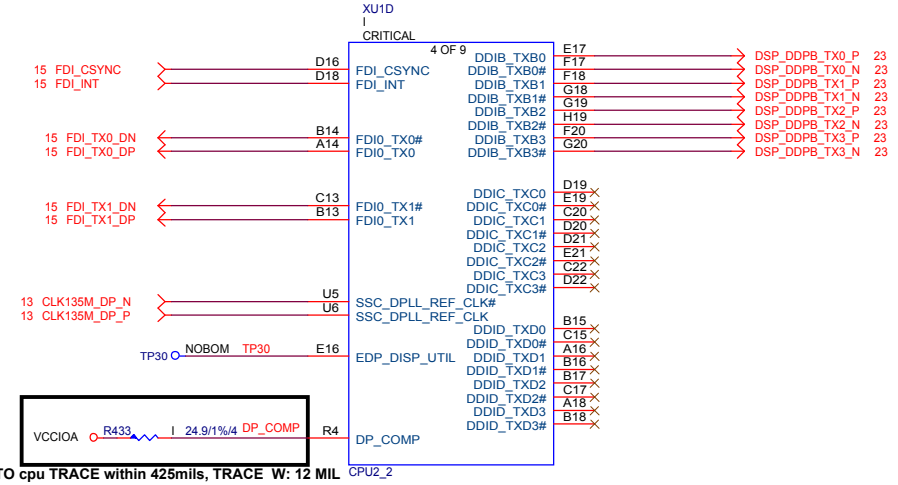

COLSE TO cpu TRACE within 425mils, TRACE W: 12 MIL

N12-150A010-L06
AVL:N12-150A020-F02

HP Restricted Secret

HEWLETT PACKARD	HP RESTRICTED	
DRAWN BY	MICRO-STAR INT'L CO.,LTD	
Title	CPU-PEG/MISC	
Size: Custom	Document Number: HP SCH P/N:803190-000(MSI MS-G013)	Rev: A
Date: Thursday, January 17, 2019	Sheet 5 of 59	

https://vinafix.com

Vinafix.com

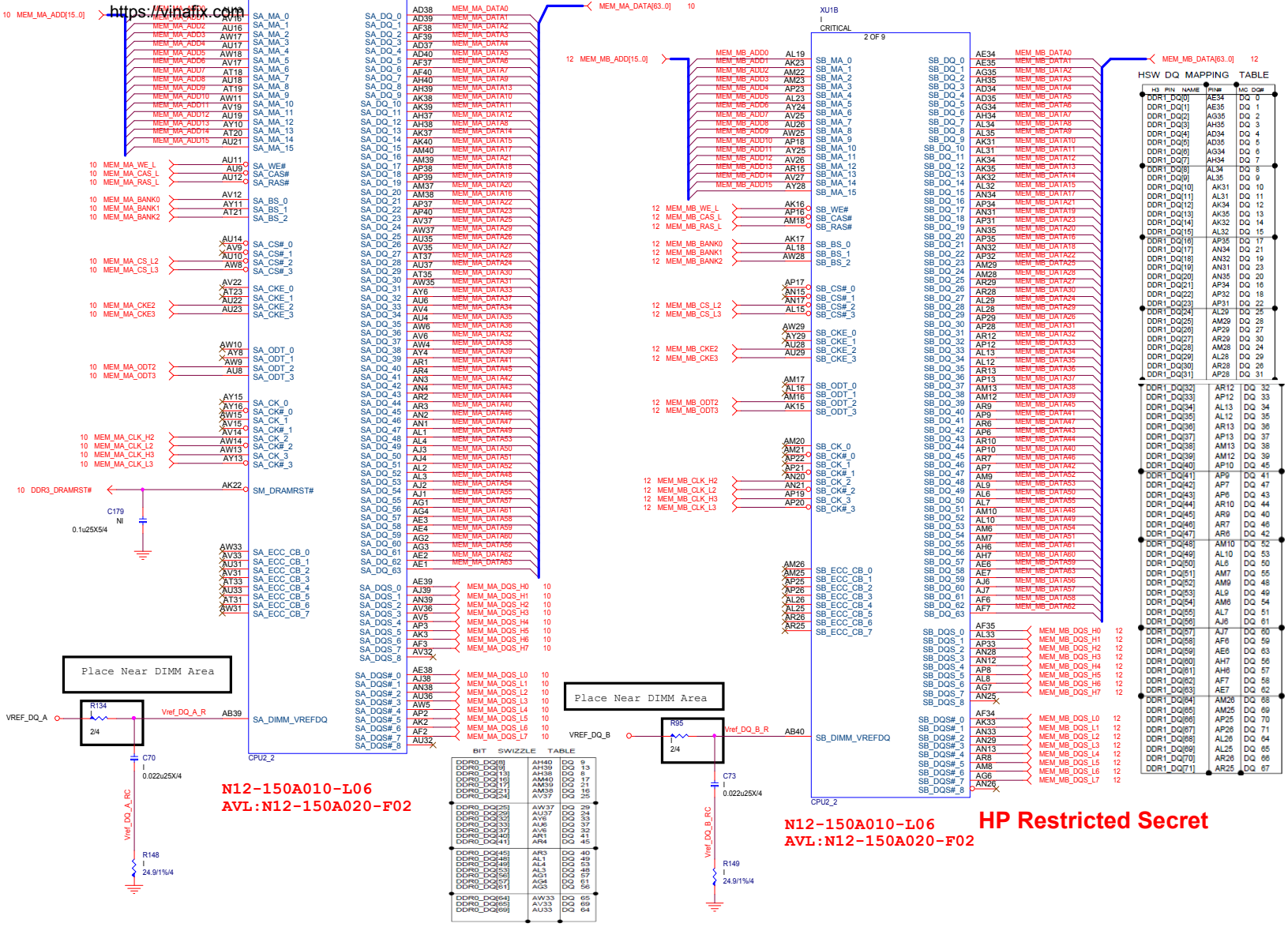

HP Restricted Secret

HEWLETT PACKARD	HP RESTRICTED
DRAWN BY	MICRO-STAR INT'L CO.,LTD
Title	CPU-Memory
Size: Custom	Document Number: HP SCH P/N:803190-000(MSI MS-G013)
Rev	A
Date: Thursday, January 17, 2019	Sheet 6 of 59

https://vinafix.com

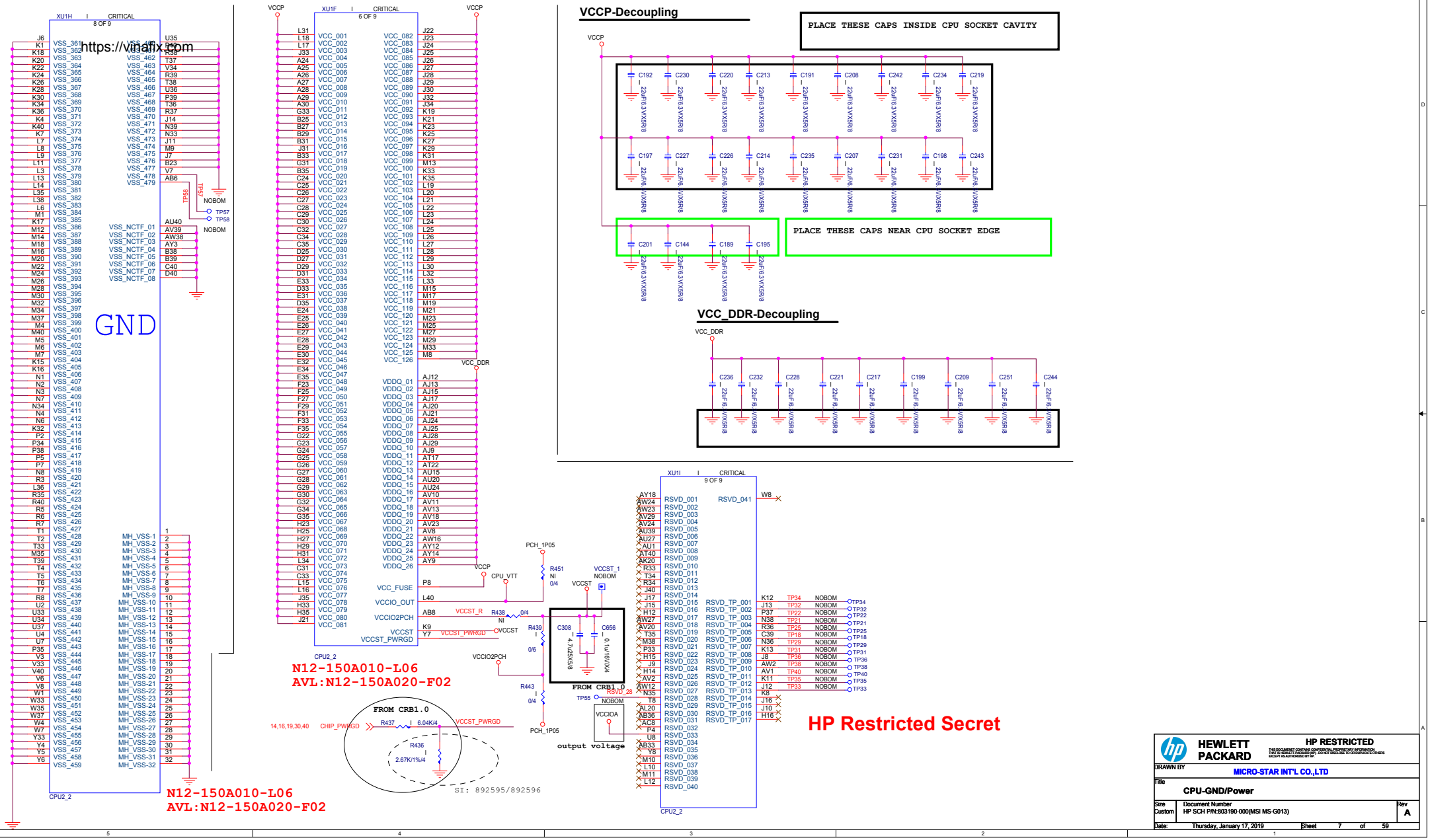

HEWLETT PACKARD	HP RESTRICTED		
DRAWN BY	MICRO-STAR INT'L CO.,LTD		
Title	CPU-GND/Power		
Size: Custom	Document Number: HP SCH P/N:803190-000(MSI MS-G013)	Rev: A	
Date: Thursday, January 17, 2019	Sheet 7 of 59		

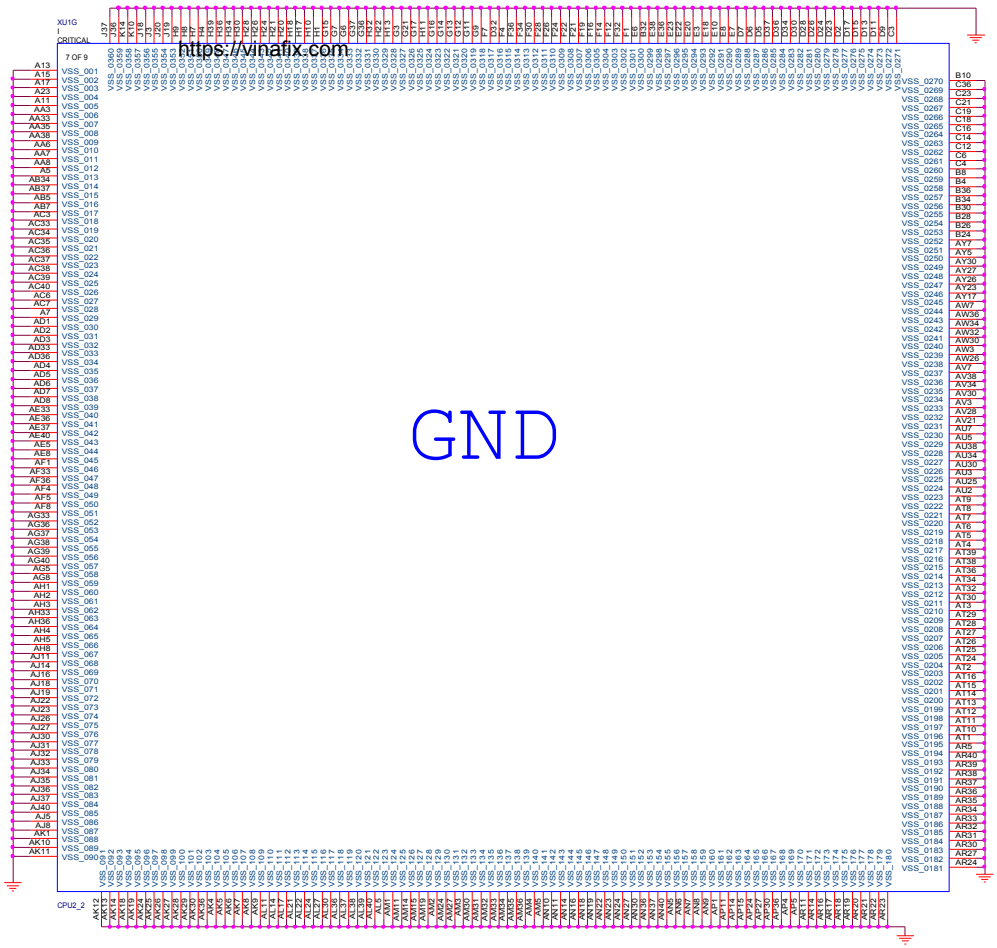

https://vinafix.com

N12-150A010-L06
AVL:N12-150A020-F02

HP Restricted Secret

HEWLETT PACKARD	HP RESTRICTED	
DRAWN BY	MICRO-STAR INT'L CO.,LTD	
Title	CPU-GND	
Size: Custom	Document Number: HP SCH P/N:803190-000(MSI MS-G013)	Rev: A
Date: Thursday, January 17, 2019	Sheet 8 of 59	

https://vinafix.com

HP Restricted Secret

HEWLETT PACKARD

HP RESTRICTED

THIS DOCUMENET CONTAINS CONFIDENTIAL PROPRIETARY INFORMATION THAT IS HEWLETT-PACKARD (HP). DO NOT DISCLOSE TO OR DUPLICATE OTHERS EXCEPT AS AUTHORIZED BY HP.

DRAWN BY: MICRO-STAR INT'L CO.,LTD

Title: **Reserve**

Size	Document Number	Rev
Custom	HP SCH P/N:803190-000(MSI MS-G013)	A

Date: Thursday, January 17, 2019 Sheet 9 of 59

DDRIII DIMM_A2

https://vinafix.com

BLACK COLOR
N13-2401591-F02

DDR3

DIMM SPD

DIMM	Address [7:0]
XMM1	A0h
XMM3	A4h

teknisi indonesia

Palce Caps Between CHA And CHB

XMM3(CHANNEL-A)
ADDRESS = 1:0 [SA1:SA0]

DDRIII-240P_BLACK-RH-6

HP Restricted Secret

HEWLETT PACKARD

HP RESTRICTED

THIS DOCUMENT CONTAINS CONFIDENTIAL PROPRIETARY INFORMATION THAT IS HEWLETT PACKARD (HP). DO NOT DISCLOSE TO OR DUPLICATE OTHERS EXCEPT AS AUTHORIZED BY HP.

DRAWN BY	MICRO-STAR INT'L CO.,LTD
Title	DDR III XMM3
Size: Custom	Document Number: HP SCH P/N:803190-000(MSI MS-G013)
Rev	A
Date:	Thursday, January 17, 2019
Sheet	10 of 59

https://vinafix.com

HP Restricted Secret

HEWLETT PACKARD

HP RESTRICTED

THIS DOCUMENET CONTAINS CONFIDENTIAL PROPRIETARY INFORMATION THAT IS HEWLETT-PACKARD (HP). DO NOT DISCLOSE TO OR DUPLICATE OTHERS EXCEPT AS AUTHORIZED BY HP.

DRAWN BY MICRO-STAR INT'L CO.,LTD

Title: Reserve

Size: Custom | Document Number: HP SCH P/N:803190-000(MSI MS-G013) | Rev: A

Date: Thursday, January 17, 2019 | Sheet 11 of 59

DDRIII DIMM_B2

https://vinafix.com

BLACK COLOR
N13-2401591-F02

DDR3

XMM1
CRITICAL

DDRIII-240P_BLACK-RH-6

XMM1(CHANNEL-B)
ADDRESS = 0:0 [SA1:SA0]

HP Restricted Secret

HP RESTRICTED
THIS DOCUMENET CONTAINS CONFIDENTIAL PROPRIETARY INFORMATION THAT IS HEWLETT PACKARD (HP). DO NOT DISCLOSE TO OR DUPLICATE OTHERS EXCEPT AS AUTHORIZED BY HP.

DRAWN BY	MICRO-STAR INT'L CO.,LTD
Title	DDR III XMM1
Size / Custom	Document Number: HP SCH P/N:803190-000(MSI MS-G013)
Rev	A
Date:	Thursday, January 17, 2019
Sheet	12 of 59

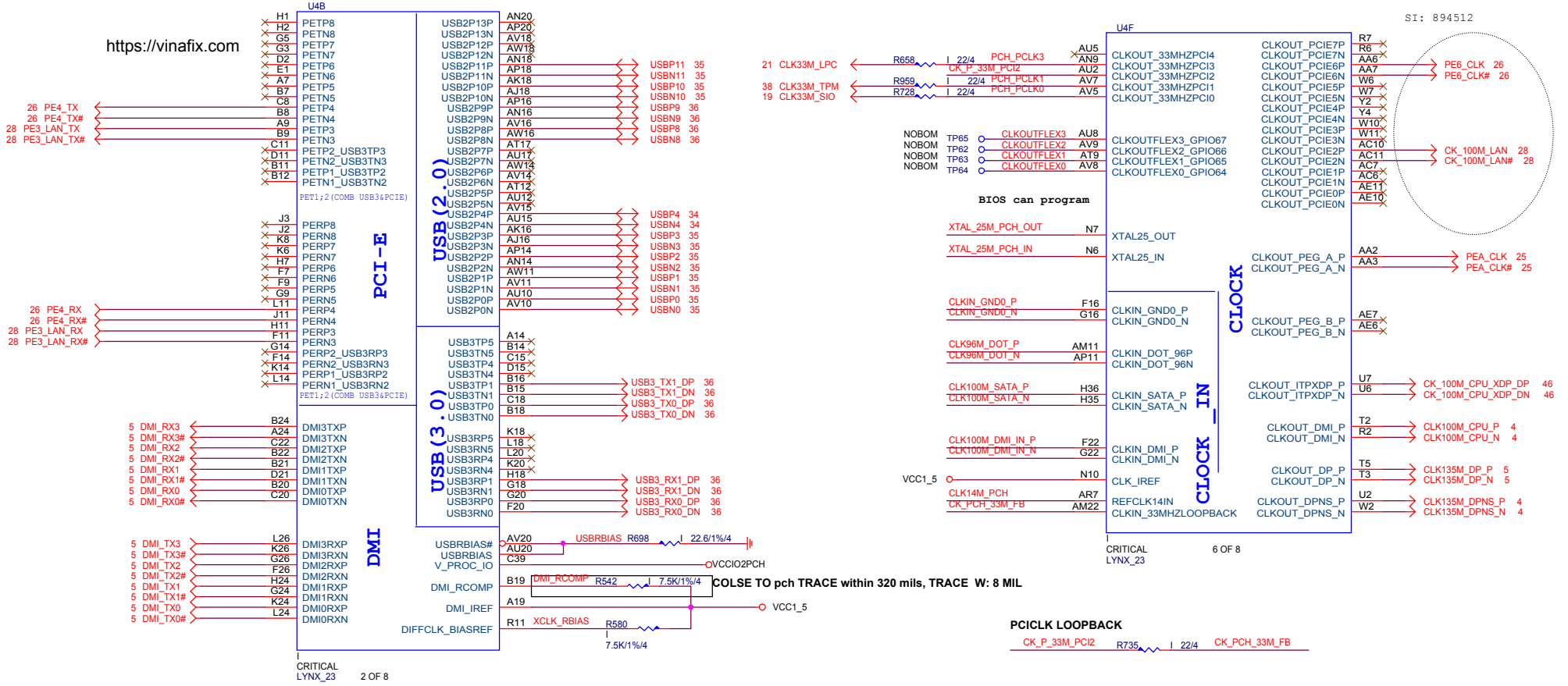
https://vinafix.com
U4B
PCI-E
USB(2.0)
USB(3.0)
DMI
CRITICAL
LYNX_23
2 OF 8
U4F
CLOCK
CLOCK_IN
BIOS can program
CRITICAL
LYNX_23
6 OF 8
SI: 894512
COLSE TO pch TRACE within 320 mils, TRACE W: 8 MIL
PCICLK LOOPBACK
no clock gen pull down
VCCIO2PCH
0.004A
C409
1u6.3X/6
C403
0.1u/16V/X/4
C405
0.1u/16V/X/4
HP Restricted Secret
HEWLETT PACKARD
HP RESTRICTED
THIS DOCUMENT CONTAINS CONFIDENTIAL PROPRIETARY INFORMATION THAT IS HEWLETT-PACKARD (HP). DO NOT DISCLOSE TO OR DUPLICATE OTHERS EXCEPT AS AUTHORIZED BY HP.
DRAWN BY
MICRO-STAR INT'L CO.,LTD
Title
PCH-PCIE/DMI/USB/CLK
Size
Custom
Document Number
HP SCH P/N:803190-000(MSI MS-G013)
Rev
A
Date:
Thursday, January 17, 2019
Sheet
13
of
59

https://vinafix.com

U4C

APWROK
CL_CLK
CL_DATA
CL_RST#
PWM3
PWM2
PWM1
PWM0
TACH7_GPIO71
TACH6_GPIO70
TACH5_GPIO69
TACH4_GPIO68
TACH3_GPIO7
TACH2_GPIO6
TACH1_GPIO1
TACH0_GPIO17
TD_IREF
3 OF8

CLINK
FAN
GPIO

SATA0RXN B28
SATA0RXP A28
SATA0TXN F31
SATA0TXP H31
SATA1RXN D30
SATA1RXP C30
SATA1TXN B34
SATA1TXP C34
SATA2RXN A31
SATA2RXP B31
SATA2TXN B35
SATA2TXP D35
SATA3RXN B32
SATA3RXP C32
SATA3TXN G33
SATA3TXP F33
SATA4RXN_PERN1 A26
SATA4RXP_PERP1 B26
SATA4TXN_PETN1 L28
SATA4TXP_PETP1 K28
SATA5RXN_PERN2 C27
SATA5RXP_PERP2 B27
SATA5TXN_PETN2 G28
SATA5TXP_PETP2 F28
SATA4;5(COMB SATA&PCIE)

SATA

SATA5GP_GPIO49 N40 PCH_GPIO49
SATA4GP_GPIO16 M39 PCH_GPIO16
SATA3GP_GPIO37 N41 PCH_GPIO37
SATA2GP_GPIO36 H40 PCH_GPIO36
SATA1GP_GPIO19 J40 PCH_GPIO19
SATA0GP_GPIO21 M37 FRONT_AUD_DET# 31

SATA_RCOMP D33 SATA_RCOMP R543 7.5K/1%/4 VCC1_5
SATA_IREF A33 VCC1_5
SATALED# J39 SATA_LED_SB# SATA_LED_SB# 19

COLSE TO pch TRACE within 500 mils, TRACE W: 4 MIL

RCIN# K36 KBRST# 19,21
SERIRQ G39 SERIRQ 19,21,38
THRMTRIP# C40 PCH_THERMTRIP# R226 390/4 PCH_1P05
PECI G40 PCH_H_PECI R553 0/4 H_PECI 4,19
SSTCTL AJ31 SSTCTL TP51
PM_SYNCH F40 PM_SYNC 4

HOST

SI: 924414,924417
C995 680p50X0402

CRITICAL
LYNX_23

PCH_MEPWROK R671 0/4 AA32
7,16,19,30,44 SUS_PWROK
CLINK_DATA U36
CLINK_RST U35 U34
TP45 TP43

+3.3V
R486 10K/4
37 BOOT_BLK_REC#
36 FRONT_USB_P26_DET#
19 IO_SMI#
BRD_ID0 AT34
COMM_B_DET# AK28 AV35
PCH_GPIO7 AT30 AV34
DC_DET# AM28 AT31
HOOD_SW_DET# AP28

TD_IREF C3
R540 8.2K/1%/4

BOOT DEVICE	GPIO51	GPIO19
SPI	float	float
PCI	float	0
LPC	0	0

PCH_GPIO51 R639 NI 1K/4
PCH_GPIO19 R640 NI 1K/4

Top Block Swap Mode
PCH_GPIO55 R594 NI 10K/4

ESI strap for server platform ONLY
PCH_GPIO53 R647 NI 1K/4

TLS confidentiality	GPIO37
EN	1
DIS_EN	0(Internal pull down)

PCH_GPIO37 R577 1K/4 +3.3V

TP61 TP61

U10 U11 AJ14 AK14 B1 B2 A3 A2 K33 K34 W37 AH24 K16 L16 AM34 L5 P5 K5 R4 N12 R12 K22 L22
TP23 TP22 TP21 TP20 TP19 TP18 TP17 TP16 TP15 TP14 TP13 TP12 TP11 TP10 TP9 TP8 TP7 TP6 TP5 TP4 TP3 TP2 TP1

U4A

PIRQA# AU29 PIRQA#
PIRQB# AU27 PIRQB#
PIRQC# AW28 PIRQC#
PIRQD# AV27 PIRQD#

GPIO2 AR30 PCH_GPIO2
GPIO3 AV29 PCH_GPIO3
GPIO4 AV28 PCH_GPIO4
GPIO5 AT27 PCH_GPIO5
GPIO8 AC40 PCH_GPIO8
GPIO9 AC41
GPIO10 AF40 USB_OCP#5 33
GPIO14 AG40 USB_OCP#7 USB_OCP#6 32
GPIO15 AC32 PCH_GPIO15
GPIO24 AE34 PCH_GPIO24
GPIO27 AU34 PCH_LAN_WAKE# PCH_LAN_WAKE# 28
GPIO28 V41 PCH_GPIO28
GPIO40 AF37 USB_OCP#1 32
GPIO41 AD39
GPIO42 AD40 AF39 USB_OCP#4 USB_OCP#3 33
GPIO43 AH26 PCH_GPIO50
GPIO50 AU31 PCH_GPIO51
GPIO51 AJ26 PCH_GPIO52
GPIO52 AV31 PCH_GPIO53
GPIO53 AW33
GPIO54 R30 PCH_GPIO55 BOOT_BLK_EN# 37
GPIO55 AC36 PCH_GPIO57
GPIO57 AE40
GPIO59 AJ40 PCH_GPIO72 USB_OCP#0 32
GPIO72

1 OF8
PIRQ&GPIO

CRITICAL
LYNX_23

Q76
N-2N7002_SOT23
PCH_THERMTRIP# D S H_THERMTRIP# 4,19
G
COLOR 19,44

USB_OCP#4 R672 0/4 PASSWORD_EN 37
PCH_GPIO24 R644 10K/4
PCH_GPIO8 R624 1K/4

PCH_GPIO57 R373 NI 10K/4 R384 10K/4 +3.3V_AUX
PCH_LAN_WAKE# R724 1K/4 PCH_GPIO72 R745 10K/4 +3.3V_LPS

USB_OCP#7 R643 10K/4
PCH_GPIO28 R612 NI 10K/4
PCH_GPIO15 R708 10K/4 +3.3V_AUX

PCH_GPIO16 R685 10K/4 R807 NI 499/4
PCH_GPIO49 R365 10K/4 R371 NI 499/4 +3.3V

SI: 893429

	HGIH	LOW
GPIO16	SATA 4	PCIE 1
GPIO49	SATA 5	PCIE 2

+3.3V_AUX
R535 NI 10K/4
Q79_2
PCH_MEPWROK
16,27,44 SLP_A# R539 10K/4 Q79_5
C413 NI 0.1u16X/4
Q79 NI
NN-CMKT3904_SOT363-6-RH

SATA_LED_SB# R555 10K/4 +3.3V
PIRQA# PIRQC# PIRQB# PIRQD# RN13 8P4R/8.2K/4
IO_SMI# R805 8.2K/4
PCH_GPIO2 R797 8.2K/4
PCH_GPIO19 R714 NI 10K/4
FRONT_USB_P26_DET# R711 10K/4
PCH_GPIO7 R715 10K/4
DC_DET# R723 10K/4
PCH_GPIO52 R597 10K/4
PCH_GPIO36 R579 NI 1K/4
PCH_GPIO3 R775 8.2K/4
PCH_GPIO4 R778 8.2K/4
PCH_GPIO5 R782 8.2K/4
PCH_GPIO50 R804 8.2K/4
HOOD_SW_DET# R770 8.2K/4

BOARD REV[1:0]	Enterprise Desktop
00	All EVT
01	All DVT
10	PVT1
11	PVT2+
00	MVB, A
01	1st Major ECN
10	2nd Major ECN
11	3rd Major ECN

Board	Board ID [2:0]
Modena	000

16 BRD_REV0 BRD_REV0 R656 NI 10K/4 R653 10K/4 +3.3V
16 BRD_REV1 BRD_REV1 R629 NI 10K/4 R632 10K/4 +3.3V_AUX
BRD_ID0 R713 NI 10K/4 R716 10K/4 +3.3V
16 BRD_ID1 BRD_ID1 R651 NI 10K/4 R637 10K/4 +3.3V
16 BRD_ID2 BRD_ID2 R665 NI 10K/4 R662 10K/4 +3.3V_AUX

PCH_1P05_ME
R523 NI 30.1K/1%/4
R527 NI 301K/1%/4
C406 NI 0.47u6.3X5/4
Q78_5
Q78_2
Q78 NI NN-CMKT3904_SOT363-6-RH
R526 NI 33K/4
R525 NI 5.6K/1%/4
C410 NI 0.1u16X/4
C408 NI 100p50N/4
+3.3V_AUX
PCH_MEPWROK

HP Restricted Secret

HEWLETT PACKARD
HP RESTRICTED
THIS DOCUMENET CONTAINS CONFIDENTIAL PROPRIETARY INFORMATION THAT IS HEWLETT-PACKARD (HP). DO NOT DISCLOSE TO OR DUPLICATE OTHERS EXCEPT AS AUTHORIZED BY HP.

DRAWN BY MICRO-STAR INT'L CO.,LTD
Title PCH-SATA/HOST/GPIO
Size Custom
Document Number HP SCH P/N:803190-000(MSI MS-G013)
Rev A
Date: Thursday, January 17, 2019
Sheet 14 of 59

https://vinafix.com

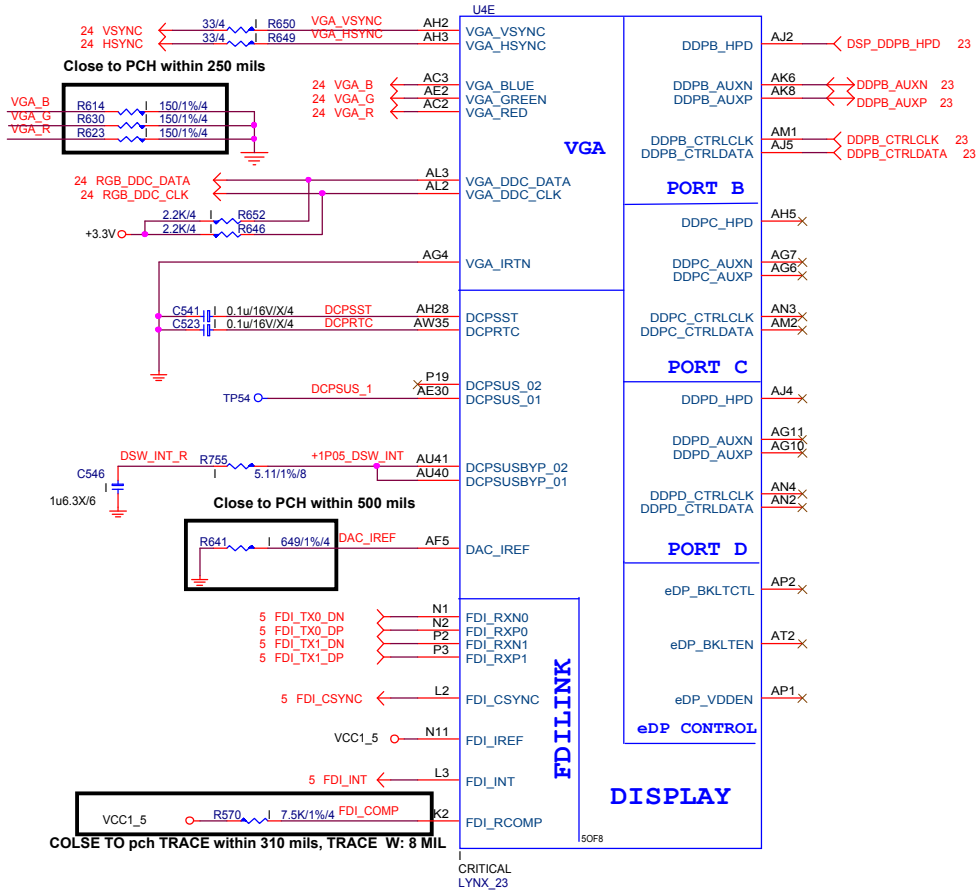

Vinafix.com

HP Restricted Secret

HEWLETT PACKARD	HP RESTRICTED	
DRAWN BY	MICRO-STAR INT'L CO.,LTD	
Title	PCH-DDI/VGA	
Size: Custom	Document Number: HP SCH P/N:803190-000(MSI MS-G013)	Rev: A
Date: Thursday, January 17, 2019	Sheet 15 of 59	

https://vinafix.com

U4D

LPC
AUDIO
SPI
RTC
SMB
JTAG ($US)

CRITICAL
LYNX_23

4 OF 8

COLSE TO pch TRACE within 320 mils, TRACE W: 8 MIL

SI: 892666/892667
SI: 893434
SI: 913300
SI: 932989
SI: 908764, 908768
SI: 892601/892602
SI: 893898

JTAG PULL HIGH and PULL DOWN

PLACE 0 OHM CLOSR TO PCH

RTC Block

Close to PCH

VBAT

R636 change to 1.8K,R631 change to 3.3K
Intel WW 14

SW50 SLIDE SWITCH OPERATION

SW50 SLIDE SWITCH OPERATION
NORMAL OPERATION
CLEAR CMOS

N91-01F0201-L06

HP Restricted Secret

HEWLETT PACKARD

HP RESTRICTED

THIS DOCUMENT CONTAINS CONFIDENTIAL PROPRIETARY INFORMATION THAT IS HEWLETT-PACKARD (HP). DO NOT DISCLOSE TO OR DUPLICATE OTHERS EXCEPT AS AUTHORIZED BY HP.

DRAWN BY	MICRO-STAR INT'L CO.,LTD
Title	PCH-SMB/LPC/AUDIO/RTC
Size: Custom	Document Number: HP SCH P/N:803190-000(MSI MS-G013)
Rev	A
Date:	Thursday, January 17, 2019
Sheet	16 of 59

https://vinafix.com

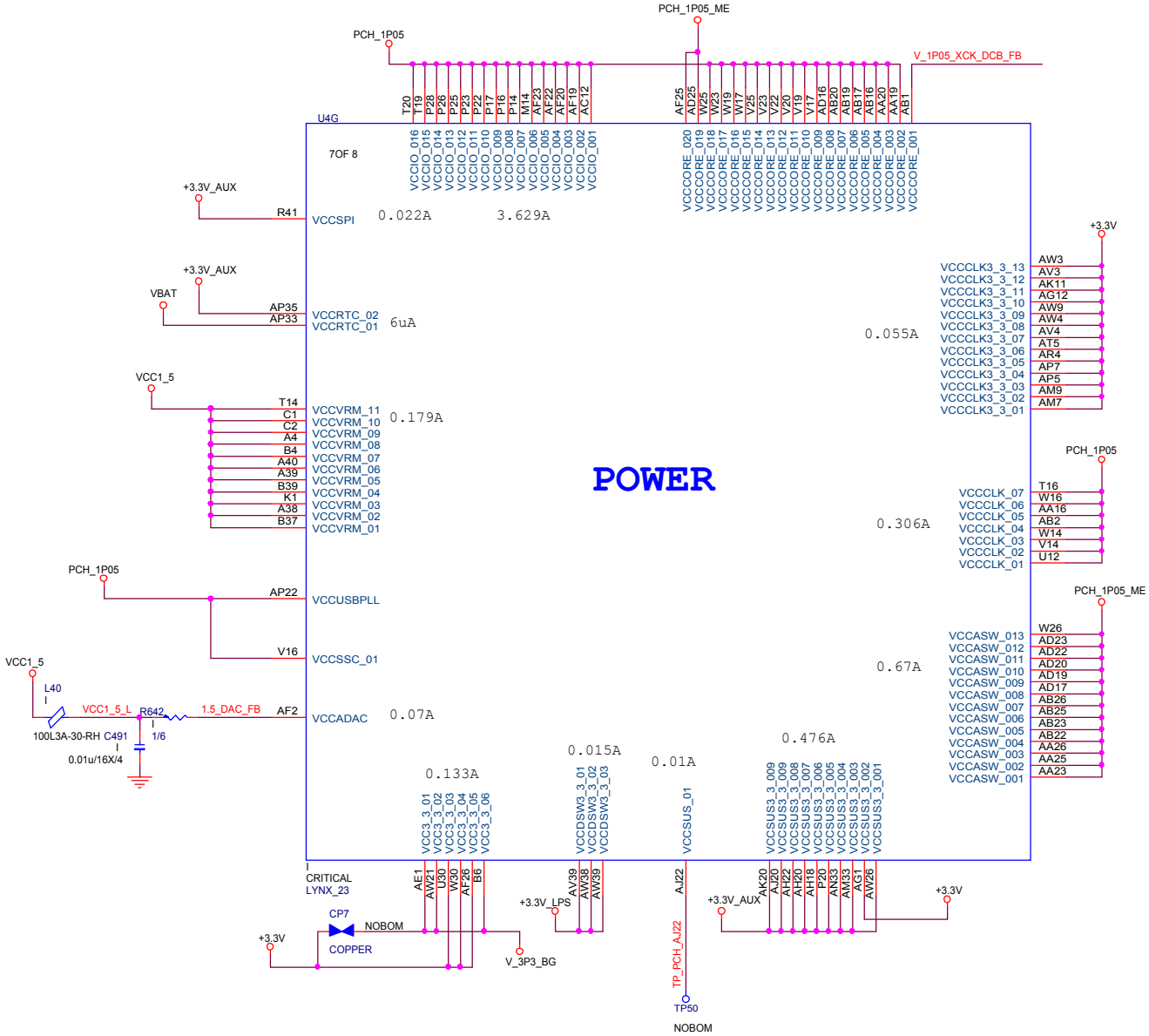


```
Place C283 ~ C237 near P14, P16, P17,P26, P28
C285 near M14  C288 near U12  C289 near W14
C291 near AB2  C295 near V16  C297 near AA16, W16
C300 near AP22, AF19

Place C303 near AV4, AR4, AT5, AP5
C634 near AG1  C633 near W30  C304 near AF26

Place C630 near AN33  C301 near AK20
C631 near AW26  C302 near AP35

Place C635 near T14

Place C636 near AW39

Place C312 ~ C311 near AD17, AD19

Place C306 near AW21  C632 near B6
```

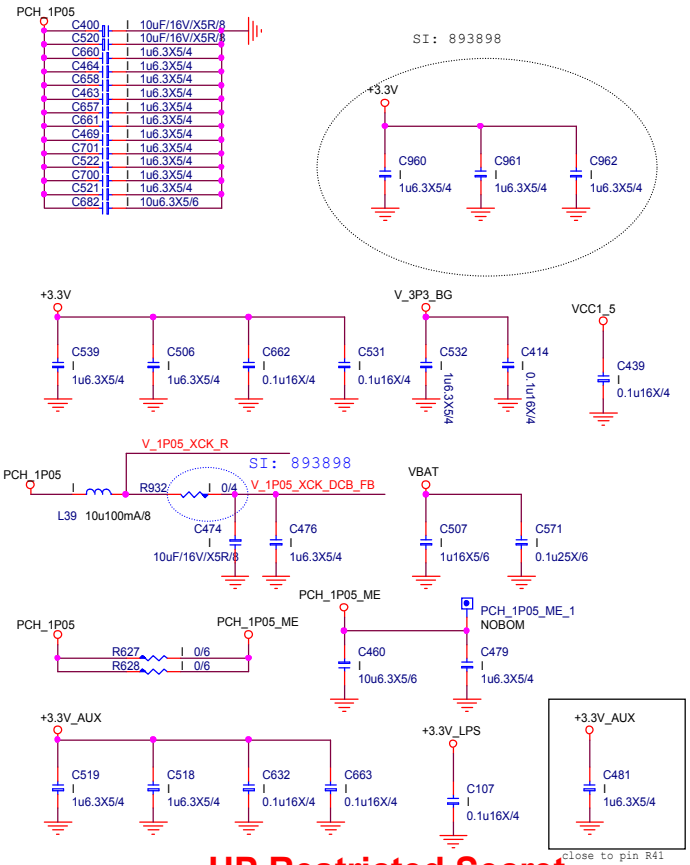

HP Restricted Secret

HEWLETT PACKARD	HP RESTRICTED	
DRAWN BY	MICRO-STAR INT'L CO.,LTD	
Title	PCH-Power	
Size: Custom	Document Number: HP SCH P/N:803190-000(MSI MS-G013)	Rev: A
Date: Thursday, January 17, 2019	Sheet 17 of 59	

https://vinafix.com

Vinafix.com

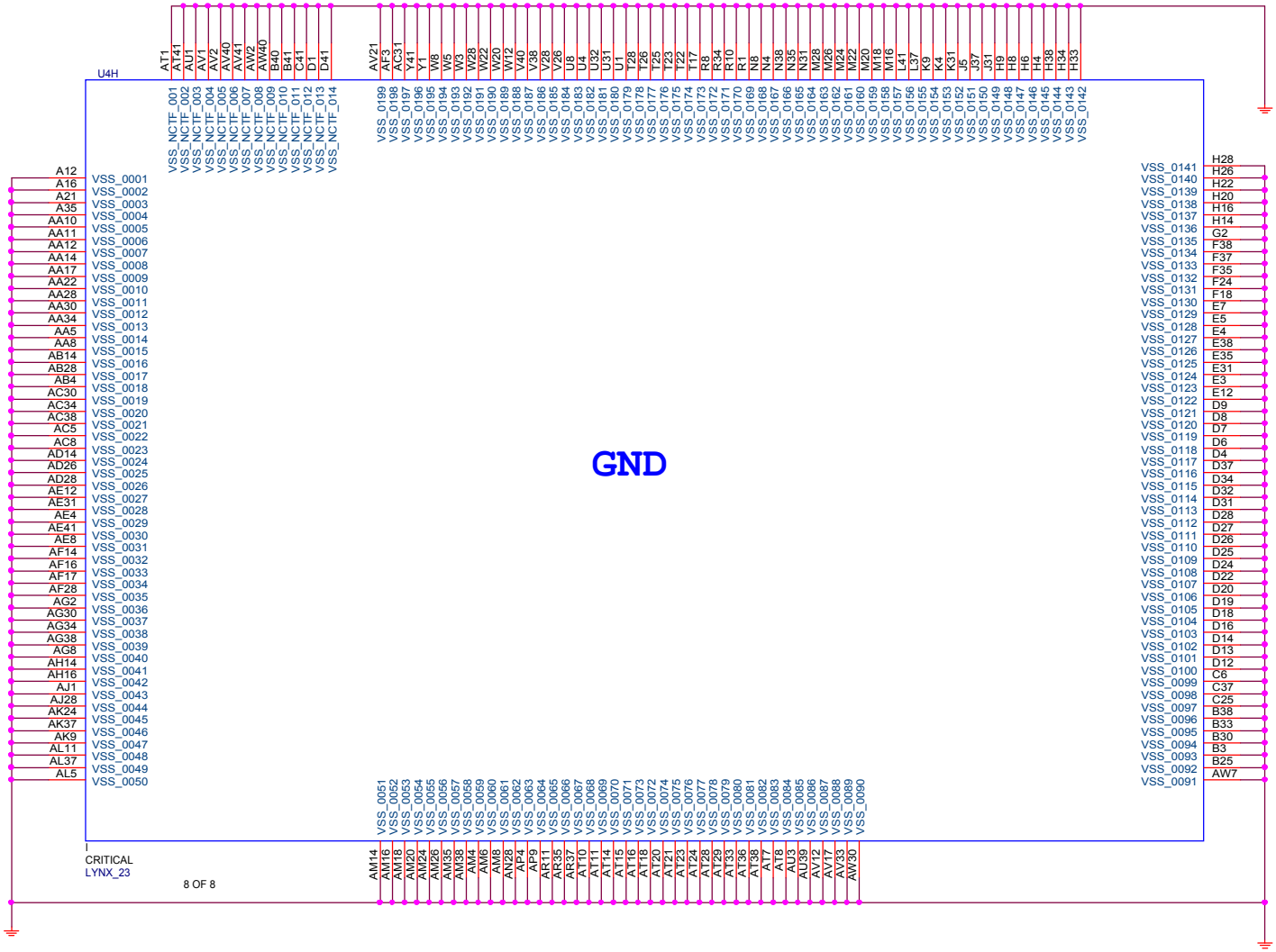

HP Restricted Secret

HEWLETT PACKARD	HP RESTRICTED	
DRAWN BY	MICRO-STAR INT'L CO.,LTD	
Title	PCH-GND	
Size: Custom	Document Number: HP SCH P/N:803190-000(MSI MS-G013)	Rev: A
Date: Thursday, January 17, 2019	Sheet 18 of 59	

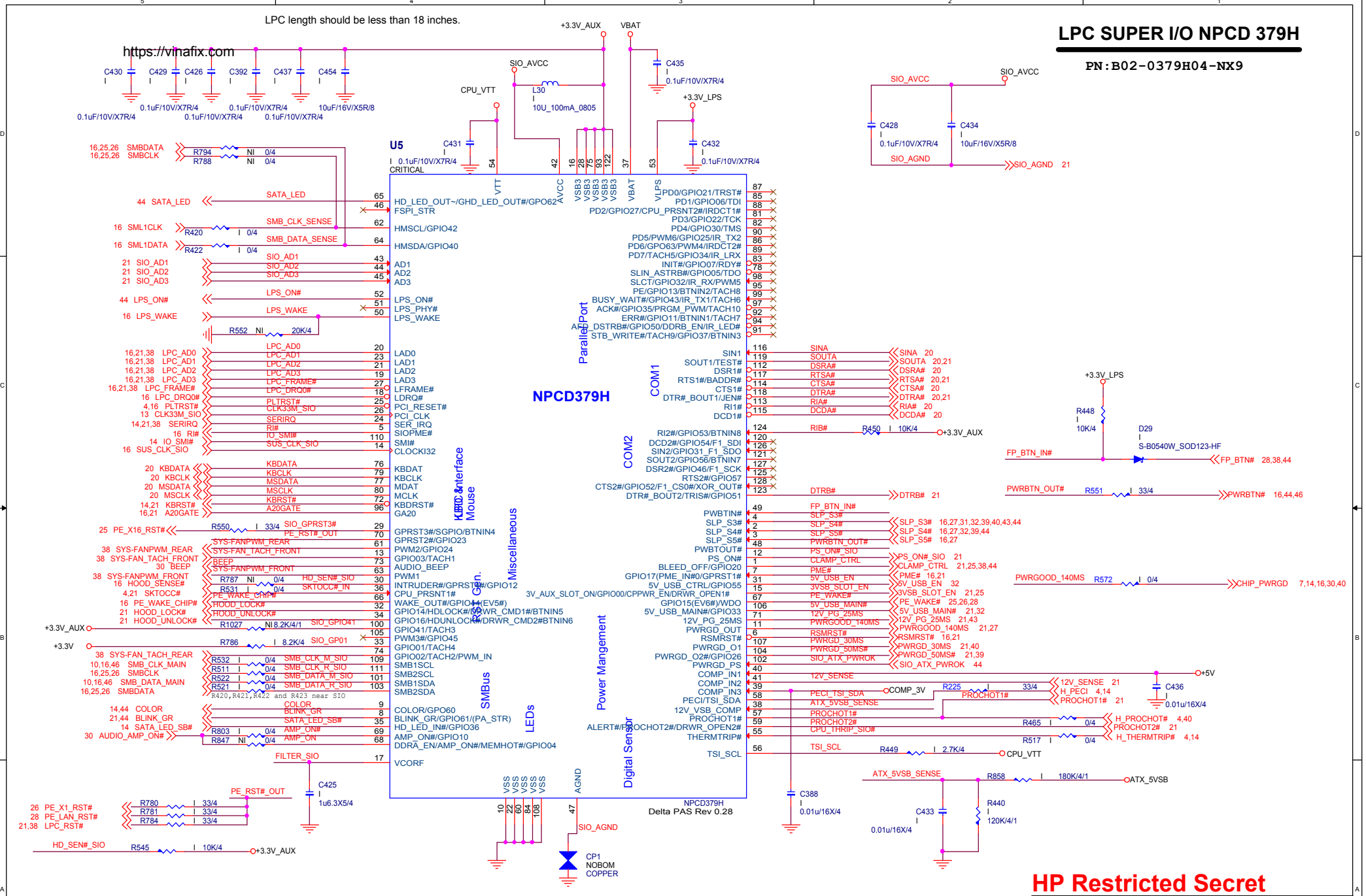

HP Restricted Secret

HEWLETT PACKARD

HP RESTRICTED

THIS DOCUMENET CONTAINS CONFIDENTIAL PROPRIETARY INFORMATION THAT IS HEWLETT-PACKARD (HP). DO NOT DISCLOSE TO OR DUPLICATE OTHERS EXCEPT AS AUTHORIZED BY HP.

DRAWN BY	MICRO-STAR INT'L CO.,LTD
Title	SIO12-NPCD379H
Size: Custom	Document Number: HP SCH P/N:803190-000(MSI MS-G013)
Rev	A
Date:	Thursday, January 17, 2019
Sheet	19 of 59

PS2 KEYBOARD & MOUSE CONNECTOR

SI: 892604/892605

https://vinafix.com

40 mils

N56-12F0151-F02

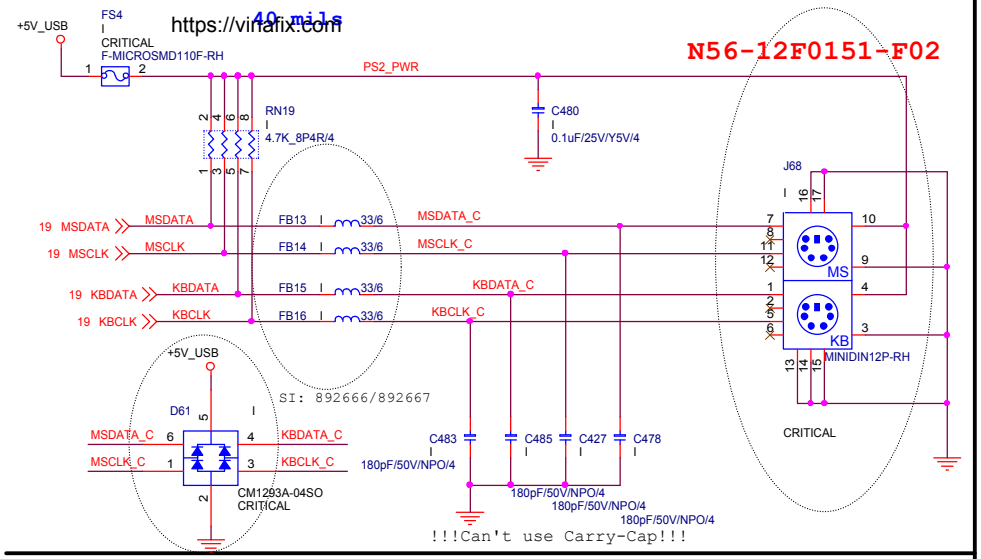

SERIAL PORT 1

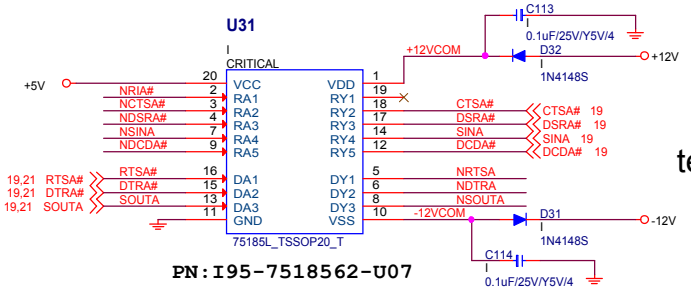

PN:I95-7518562-U07

teknisi indonesia

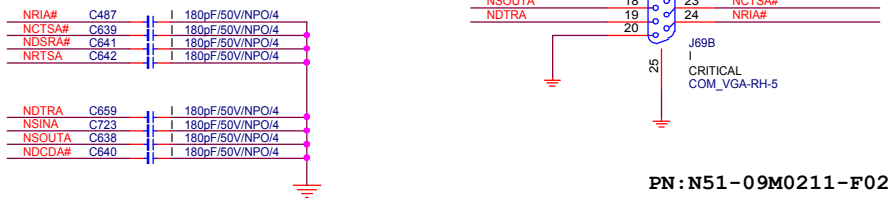

PN:N51-09M0211-F02

TABLE 12
FLOATING SERIAL PORT PIN DEFINITION (TOP VIEW)

P52

Pin #	Signal Name	Signal Name	Pin #
1	DTR#	RXD	2
3	CTS#	DSR#	4
5	TXD	RI#	6
7	GND	GND	8
9	+5 V	+3.3 VAUX	10
11	RTS#	COMM B DETECT#	12
13	DCD#	-12 V (THRU DIODE)	14
15	+12 V (THRU DIODE)	KEY	16

Support ring wake up

pull up resistor at S/B inside

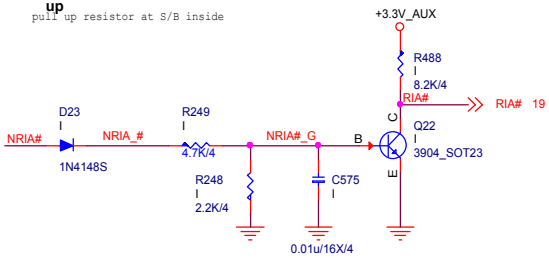

HP Restricted Secret

HEWLETT PACKARD	HP RESTRICTED	
DRAWN BY	MICRO-STAR INT'L CO.,LTD	
Title	KB / MS / COM / LPT	
Size: Custom	Document Number: HP SCH P/N:803190-000(MSI MS-G013)	Rev: A
Date: Thursday, January 17, 2019	Sheet 20 of 59	

SYSOPT Strap (RTS1~):
R124 - 0x2E* DEFAULT
R144 - 0x4E

https://vinafix.com

+3.3V
R607 NI 10K/4
19,20 RTSA# RTSA#
R606 NI 4.7K/4

– 10 KΩ[1] external pull-up resistor - Workstations pins default.
– 10 KΩ[1] external pull-down resistor - Desktop pins default.

19,44 BLINK_GR
R869 I 10K/4

– No pull-down resistor (default) - normal device operation.
– 4.7 KΩ[1] external pull-down resistor - JTAG selected.

19 DTRB#
R881 NI 4.7K/4

SI:784070

19,20 DTRA#
R879 NI 4.7K/4

19,20 SOUTA
R880 NI 4.7K/4

LPC Debug

+3.3V
E17 PROTO
16,19,38 LPC_FRAME#
16,19,38 LPC_AD3
16,19,38 LPC_AD0
19,38 LPC_RST#
SERIRQ 14,19,38
LPC_AD1 16,19,38
LPC_AD2 16,19,38
CLK33M_LPC 13
H2X6[7]M_BLACK-HF

N31-2061311-H06

+3.3V_AUX
+12V
R611 27.4KR1%0402-RH I
R566 I 4.7K/4
Q150_G G Q150 I P-PA503EMG_SOT23-3-RH
Q90_G G Q90 N-2N7002_SOT23
C516 NI 0.1uF/25V/Y5V/4
R585 10K/4 I
+5V
R581 5.6K/4/1 I
Q91_G G Q91 N-2N7002_SOT23
C489 NI 0.1uF/25V/Y5V/4
R582 10K/4 I
Q91_D
COMP_3V

19 HOOD_LOCK#
19 HOOD_UNLOCK#
R258 I 2.2K/4
R608 I 2.2K/4
+3.3V

19 PS_ON#_SIO
16,19 RSMRST#
19,27 PWRGOOD_140MS
19,39 PWRGD_50MS#
19,40 PWRGD_30MS
PS_ON#_SIO
RSMRST#
PWRGOOD_140MS
PWRGD_50MS#
PWRGD_30MS
R621 I 8.2K/4
R590 NI 1K/4
R599 I 1K/4
R616 I 10K/4
R568 I 10K/4
+3.3V_AUX

19,25,38,44 CLAMP_CTRL
16,19 PME#
19,25 3VSB_SLOT_EN
19,43 12V_PG_25MS
CLAMP_CTRL
PME#
3VSB_SLOT_EN
12V_PG_25MS
R607 I 10K/4
R602 I 8.2K/4
R620 NI 4.7K/4
R595 I 10K/4

4,19 SKTOCC#
SKTOCC#
R633 I 6.2M/4
VBAT

19,32 5V_USB_MAIN#
5V_USB_MAIN#
R603 I 10K/4
+3.3V_AUX

14,19,38 SERIRQ
14,19 KBRST#
16,19 A20GATE
SERIRQ
KBRST#
A20GATE
R584 I 10K/4
R587 NI 8.2K/4
R586 NI 8.2K/4
+3.3V

19 PROCHOT1#
19 PROCHOT2#
PROCHOT1#
PROCHOT2#
R592 NI 10K/4
R583 I 10K/4
CPU_VTT

19,27 PWRGOOD_140MS
PWRGOOD_140MS
R573 I 20K/4

+12V
R560 I 11.8K/4/1
19 12V_SENSE
12V_SENSE
1.573V
R563 I 1.78K/4/1
C438 I 0.01u/16X/4
D33 I 1N4148S
12V_SENSE_D
1.70V
+12VIN
R559 I 1K/6
R562 I 6.04K/6/1
C440 I 0.1uF/25V/Y5V/4

SIO_AVCC
R601 I 7.68K/4/1
SIO_AD1 19
C449 I 100p50N/4
RT2 I CRITICAL 10KRT1%
CP18 COPPER NOBOM
19 SIO_AGND
SIO_AGND_AD1

SIO_AVCC
R609 I 3.01K/4/1
SIO_AD2 19
C445 I 100p50N/4
RT4 I CRITICAL 10KRT1%
near X16 Slot
CP22 COPPER NOBOM
19 SIO_AGND
SIO_AGND_AD2

SIO_AVCC
R610 NI 3.01K/4/1
SIO_AD3 19
C446 NI 100p50N/4
RT5 NI CRITICAL 10KRT1%
near U5
CP23 COPPER NOBOM
19 SIO_AGND
SIO_AGND_AD3

16,19 RSMRST#
RSMRST#
R617 NI 10K/4
C442 I 1000p50X/4

19 PS_ON#_SIO
PS_ON#_SIO
R574 I 0/4
PS_ON# 27,43,44

HP Restricted Secret

HEWLETT PACKARD
HP RESTRICTED
THIS DOCUMENET CONTAINS CONFIDENTIAL PROPRIETARY INFORMATION THAT IS HEWLETT-PACKARD (HP). DO NOT DISCLOSE TO OR DUPLICATE OTHERS EXCEPT AS AUTHORIZED BY HP.

DRAWN BY MICRO-STAR INT'L CO.,LTD
Title SIO- PULL UP/DOWN/PS_ON
Size Custom
Document Number HP SCH P/N:803190-000(MSI MS-G013)
Rev A
Date: Thursday, January 17, 2019
Sheet 21 of 59

https://vinafix.com

HP Restricted Secret

HEWLETT PACKARD

HP RESTRICTED

THIS DOCUMENET CONTAINS CONFIDENTIAL PROPRIETARY INFORMATION THAT IS HEWLETT-PACKARD (HP). DO NOT DISCLOSE TO OR DUPLICATE OTHERS EXCEPT AS AUTHORIZED BY HP.

DRAWN BY MICRO-STAR INT'L CO.,LTD

Title: Reserved

Size: Custom | Document Number: HP SCH P/N:803190-000(MSI MS-G013) | Rev: A

Date: Thursday, January 17, 2019 | Sheet 22 of 59

Display conn

https://vinafix.com

5 DSP_DDPB_TX3_P — C105 0.1u16X/4 — DP_DATA3_DP
5 DSP_DDPB_TX3_N — C106 0.1u16X/4 — DP_DATA3_DN
5 DSP_DDPB_TX2_P — C108 0.1u16X/4 — DP_DATA2_DP
5 DSP_DDPB_TX2_N — C111 0.1u16X/4 — DP_DATA2_DN
5 DSP_DDPB_TX1_P — C110 0.1u16X/4 — DP_DATA1_DP
5 DSP_DDPB_TX1_N — C130 0.1u16X/4 — DP_DATA1_DN
5 DSP_DDPB_TX0_P — C112 0.1u16X/4 — DP_DATA0_DP
5 DSP_DDPB_TX0_N — C127 0.1u16X/4 — DP_DATA0_DN

RN2 4P2R-0/4: DP_DATA3_DN, DP_DATA3_DP → DP_TXD3-, DP_TXD3+
RN3 4P2R-0/4: DP_DATA2_DN, DP_DATA2_DP → DP_TXD2-, DP_TXD2+
RN4 4P2R-0/4: DP_DATA1_DP, DP_DATA1_DN → DP_TXD1+, DP_TXD1-
RN5 4P2R-0/4: DP_DATA0_DN, DP_DATA0_DP → DP_TXD0-, DP_TXD0+

L5: DP_DATA3_DN, DP_DATA3_DP → DP_TXD3-, DP_TXD3+
L6: DP_DATA2_DN, DP_DATA2_DP → DP_TXD2-, DP_TXD2+
L7: DP_DATA1_DP, DP_DATA1_DN → DP_TXD1+, DP_TXD1-
L8: DP_DATA0_DN, DP_DATA0_DP → DP_TXD0-, DP_TXD0+
NI CMC-L12-9008080-HF CRITICAL

J63 CRITICAL — DISPO20PSM_BLACK-RH

DP_TXD0+	1	ML_LANE_0P	
DP_TXD0- / DP_TXD1+	2	GND	21
	3	ML_LANE_0N	22
	4	ML_LANE_1P	23
DP_TXD1- / DP_TXD2+	5	GND	24
	6	ML_LANE_1N	MEC1
DP_TXD2- / DP_TXD3+	7	ML_LANE_2P	
	8	GND	
	9	ML_LANE_2N	
DP_TXD3-	10	ML_LANE_3P	
DP_CBL_DET	11	GND	
DP_P14	12	ML_LANE_3N	
DP_AUX_CH_MUX_PC	13	GND	
	14	GND	
DP_AUX_CH_MUX_NC	15	AUX_CHP	
DP_HPD	16	GND	
	17	AUX_CHN	
+DP_PWR	18	HOT PLUG DETECT	
+DP_PWR	19	RETURN DP_PWR	
	20	DP_PWR	

MEC1

N5W-20M0530-W06

+3.3V — R283 2.2K/4, R280 2.2K/4
15 DDPB_CTRLDATA
15 DDPB_CTRLCLK

DP_POWER

+3.3V — R277 0/8 — NI Q20 (N-P8503BMG_SOT23-3-RH) — DP_PWR_FS — FS2 F-MICROSMD110F-RH CRITICAL — DP_PWR_B — FB5 220Ohm/1800mA/0.08Ohm/8 — +DP_PWR
+12V — R278 10K/4 — DP_PWR_G — R299 100K/4 — +DP_PWR
+3.3V — C122 0.1u16X/4
C117 0.1u16X/4
C116 NI 10uF/16V/X5R/8

U58 ESD-PDY050003-2510-RH CRITICAL

DP_CBL_DET	1	10	DP_CBL_DET
DP_HPD	2	9	DP_HPD
	3	8	
DP_AUX_CH_MUX_NC	4	7	DP_AUX_CH_MUX_NC
DP_AUX_CH_MUX_PC	5	6	DP_AUX_CH_MUX_PC

U59 ESD-ESD3V3U4ULC-RH CRITICAL

DP_TXD2+	1	10	DP_TXD2+
DP_TXD2-	2	9	DP_TXD2-
	3	8	
DP_TXD3+	4	7	DP_TXD3+
DP_TXD3-	5	6	DP_TXD3-

U60 ESD-ESD3V3U4ULC-RH CRITICAL

DP_TXD0+	1	10	DP_TXD0+
DP_TXD0-	2	9	DP_TXD0-
	3	8	
DP_TXD1+	4	7	DP_TXD1+
DP_TXD1-	5	6	DP_TXD1-

AVL:D0G-06A050C-A68

+3.3V
DP_AUX_CH_MUX_NC — R271 100KR0402
DP_AUX_CH_MUX_PC — R300 100KR0402
DP_CBL_DET — R297 1MR0402
DP_HPD — R279 100KR0402
DP_P14 — R298 5.1MR0402

DP_HPD — Q26 N-BSS138_SOT23 — +5V — NI 100K/4 R276 — DSP_DDPB_HPD 15

DP_TXD3- / DP_TXD3+ — R860 NI 180/4
DP_TXD1+ / DP_TXD1- — R866 NI 180/4
DP_TXD2- / DP_TXD2+ — R867 NI 180/4
DP_TXD0- / DP_TXD0+ — R865 NI 180/4

+5V — U61 CRITICAL — PI5C3257QE_QSOP16-LF — C128 0.1uF/25V/Y5V/4

DP_CBL_DET	1	S VCC	16
DPC_AUX_CHP	2	IA0 E	15
	3	IA1 ID0	14
DP_AUX_CH_MUX_PC	4	YA ID1	13
DPC_AUX_CHN	5	IB0 YD	12
	6	IB1 IC0	11
DP_AUX_CH_MUX_NC	7	YB IC1	10
	8	GND YC	9

15 DDPB_AUXP — C131 0.1u16X/4 — DPC_AUX_CHP
15 DDPB_AUXN — C120 0.1u16X/4 — DPC_AUX_CHN
DP_AUX_CH_MUX_PC → DDPB_CTRLCLK 15
DP_AUX_CH_MUX_NC → DDPB_CTRLDATA 15

DP_AUX_CH_MUX_PC / DP_AUX_CH_MUX_NC — C118 NI 47p50N0402, C119 NI 47p50N0402
DP_CBL_DET / DP_HPD — C121 NI 47p50N0402, C123 NI 47p50N0402

HP Restricted Secret

HEWLETT PACKARD

HP RESTRICTED
THIS DOCUMENET CONTAINS CONFIDENTIAL PROPRIETARY INFORMATION THAT IS HEWLETT-PACKARD (HP). DO NOT DISCLOSE TO OR DUPLICATE OTHERS EXCEPT AS AUTHORIZED BY HP.

DRAWN BY: MICRO-STAR INT'L CO.,LTD
Title: DP Port CONN
Size: Custom | Document Number: HP SCH P/N:803190-000(MSI MS-G013) | Rev: A
Date: Thursday, January 17, 2019 | Sheet 23 of 59

VGA CONN BLOCK

https://vinafix.com

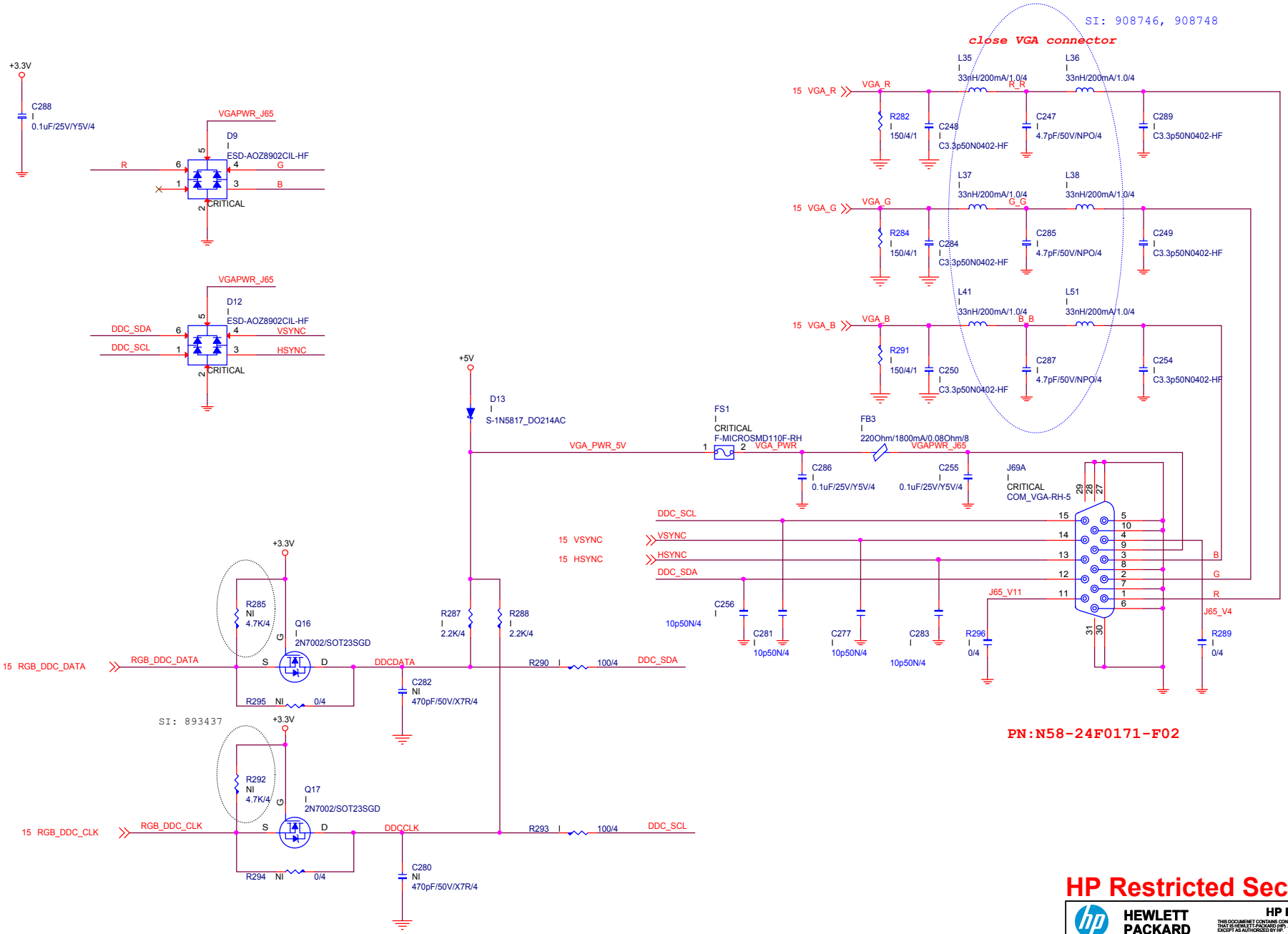

PN:N58-24F0171-F02

Vinafix.com

HP Restricted Secret

HEWLETT PACKARD	HP RESTRICTED	
DRAWN BY	MICRO-STAR INT'L CO.,LTD	
Title	VGA CONN	
Size: Custom	Document Number: HP SCH P/N:803190-000(MSI MS-G013)	Rev: A
Date: Thursday, January 17, 2019	Sheet 24 of 59	

https://vinafix.com

PCI_EXPRESS X16 SLOT

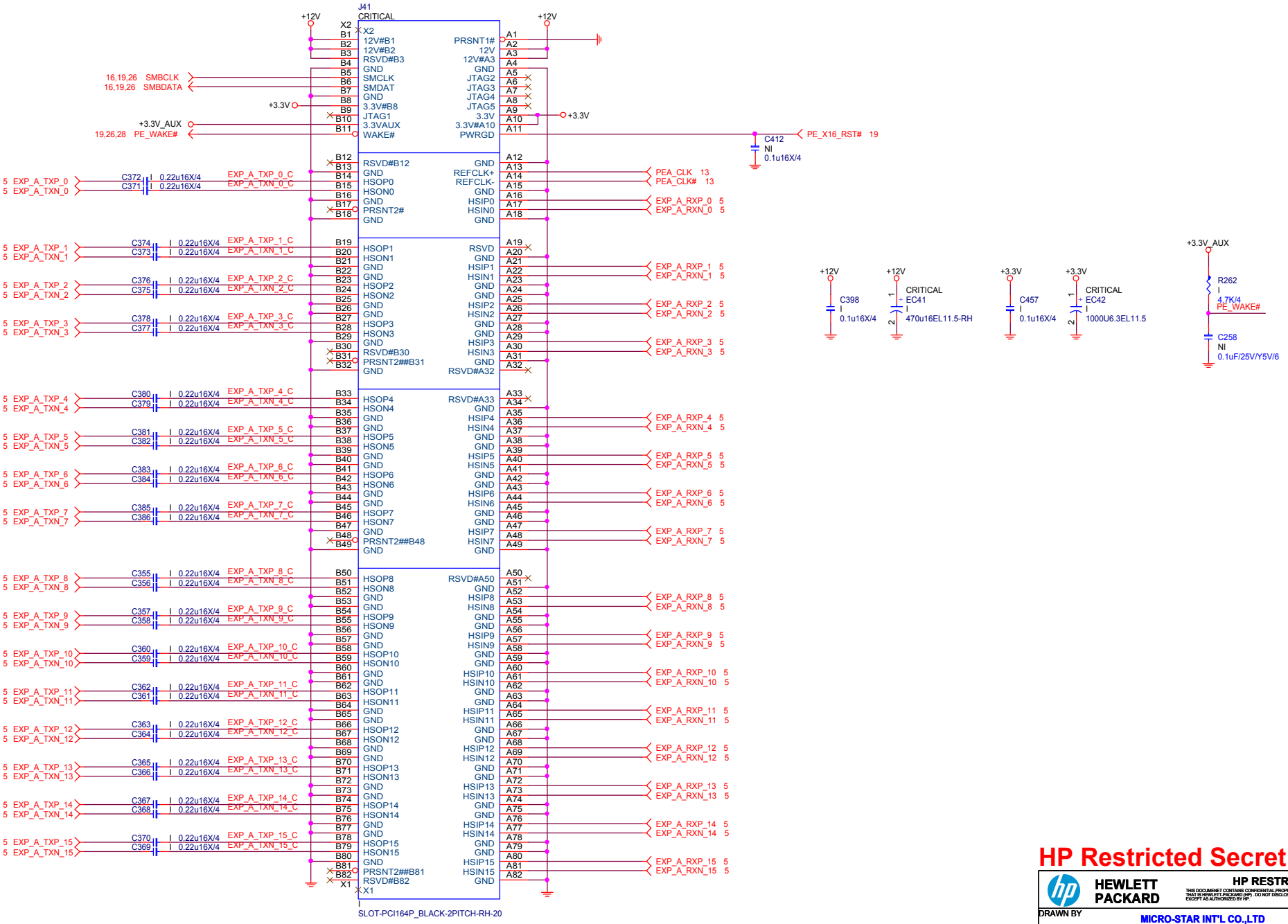

N11-1641151-L06

HP Restricted Secret

HEWLETT PACKARD	HP RESTRICTED	
DRAWN BY	MICRO-STAR INT'L CO.,LTD	
Title	PCIE x16 Slot	
Size: Custom	Document Number: HP SCH P/N:803190-000(MSI MS-G013)	Rev: A
Date: Thursday, January 17, 2019	Sheet 25 of 59	

https://vinafix.com

PCI_EXPRESS x1-PORT

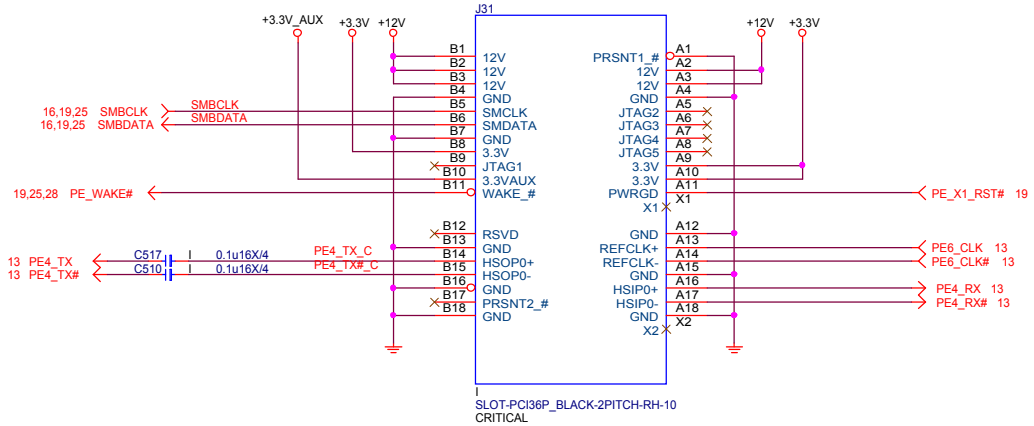

N11-0360381-L06

HP Restricted Secret

HEWLETT PACKARD	HP RESTRICTED THIS DOCUMENET CONTAINS CONFIDENTIAL PROPRIETARY INFORMATION THAT IS HEWLETT-PACKARD (HP). DO NOT DISCLOSE TO OR DUPLICATE OTHERS EXCEPT AS AUTHORIZED BY HP.	
DRAWN BY	MICRO-STAR INT'L CO.,LTD	
Title	PCIE x1 Slots	
Size: Custom	Document Number: HP SCH P/N:803190-000(MSI MS-G013)	Rev: A
Date: Thursday, January 17, 2019	Sheet 26 of 59	

SATA Connector

https://vinafix.com

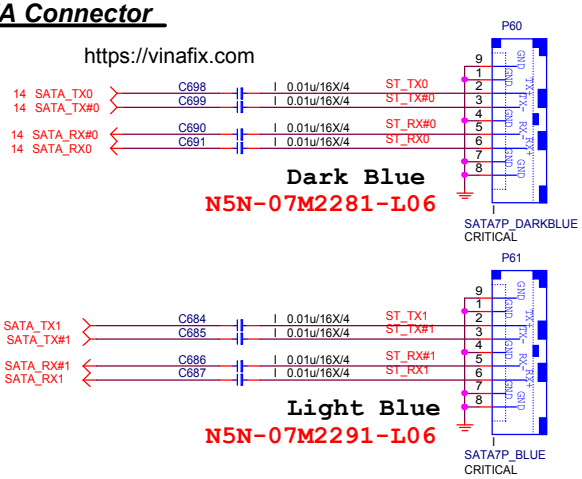

SLP_LAN#

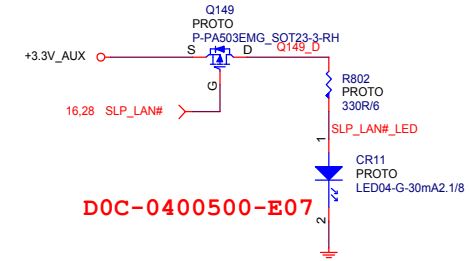

SLP_A#

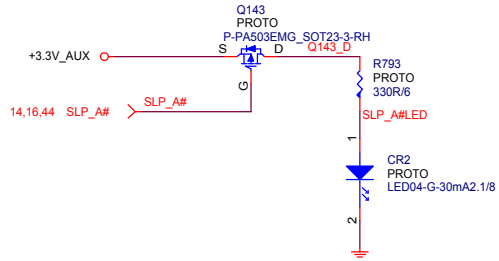

SLP_S4#

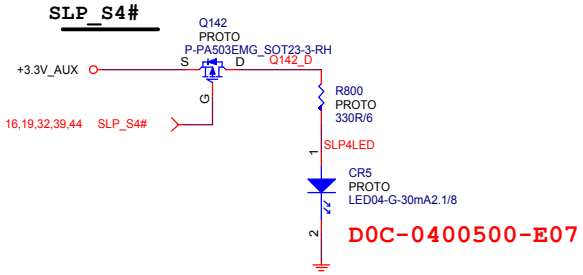

3VSB

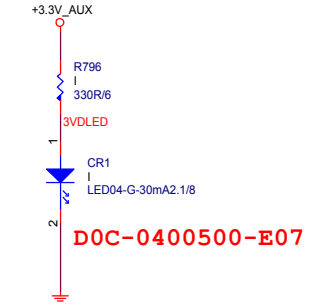

VRMPWRGD

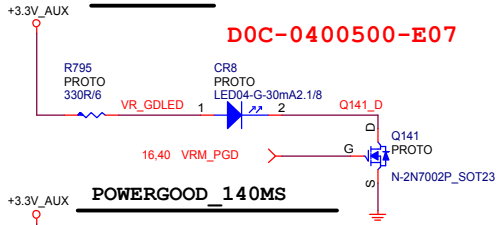

POWERGOOD_140MS

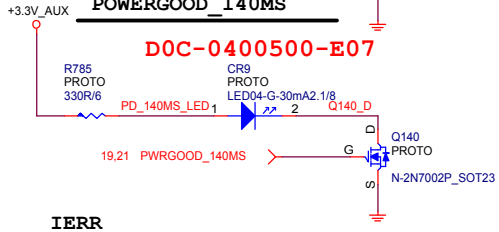

PS_ON#

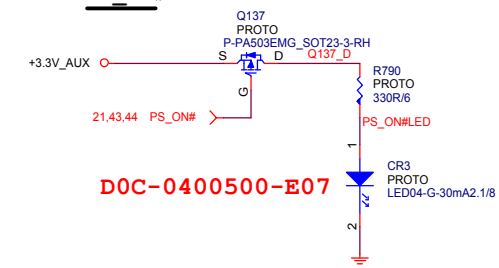

SLP_S5#

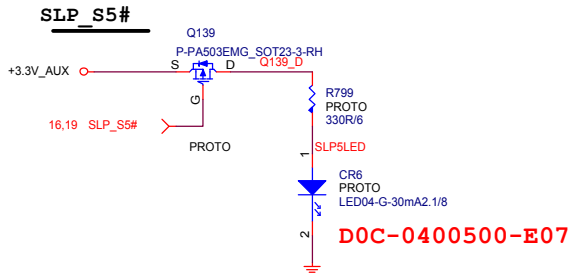

IERR

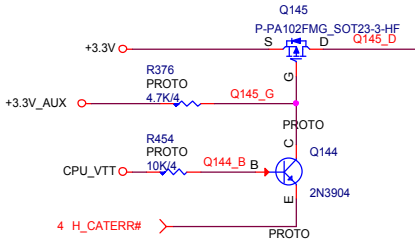

SLP_S3#

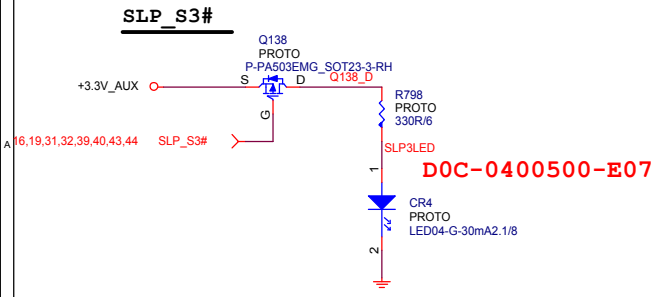

SLP_SUS#

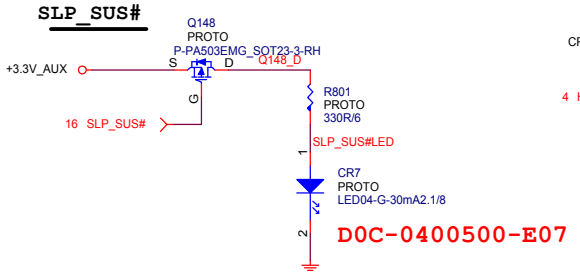

teknisi indonesia

HP Restricted Secret

HEWLETT PACKARD	HP RESTRICTED	
DRAWN BY	MICRO-STAR INT'L CO.,LTD	
Title	SATA/LED	
Size: Custom	Document Number: HP SCH P/N:803190-000(MSI MS-G013)	Rev: A
Date: Thursday, January 17, 2019	Sheet 27 of 59	

Gigabit LAN RTL8111H-CG

https://vinafix.com

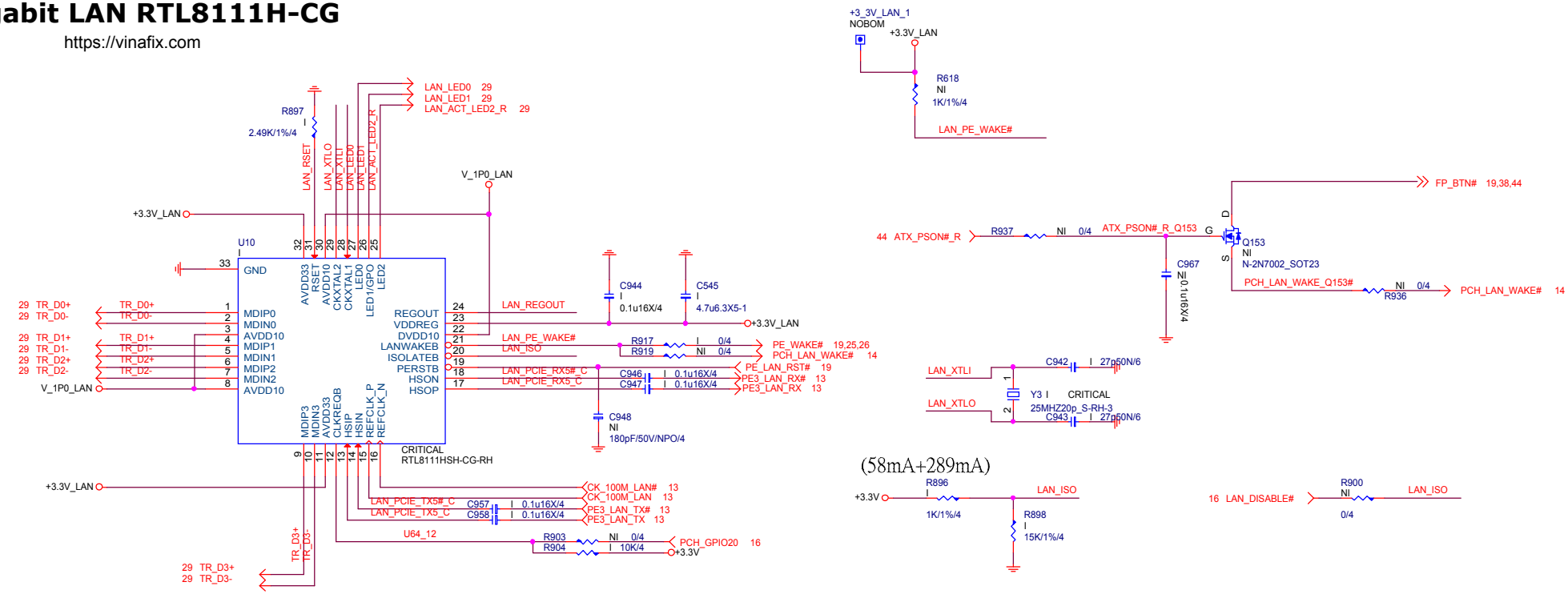

B06-08111CC-R09

LAN Power

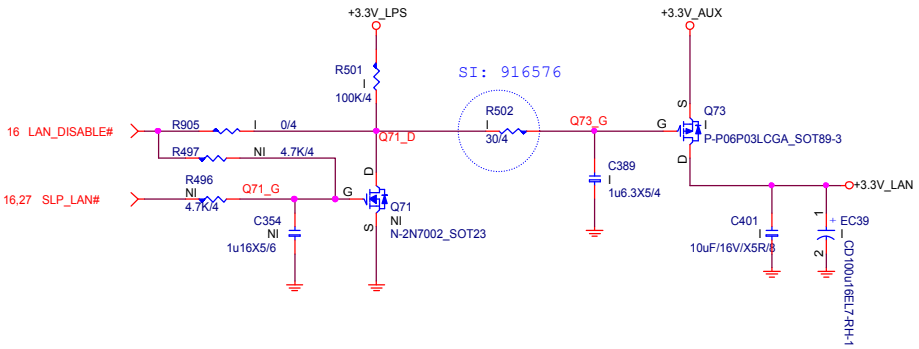

Place Near Pin

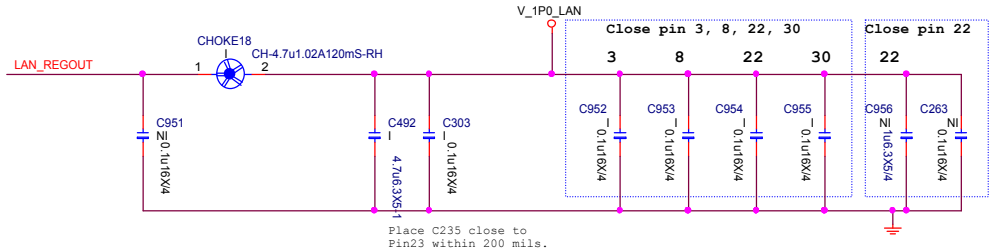

Place Near Pin

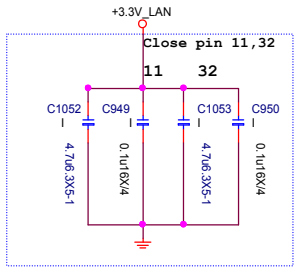

HP Restricted Secret

HEWLETT PACKARD	HP RESTRICTED
DRAWN BY	MICRO-STAR INT'L CO.,LTD
Title	Gigabit LAN-RTL8151GH-CG
Size: Custom	Document Number: HP SCH P/N:803190-000(MSI MS-G013)
Rev	A
Date: Thursday, January 17, 2019	Sheet 28 of 59

https://vinafix.com

LAN Connector

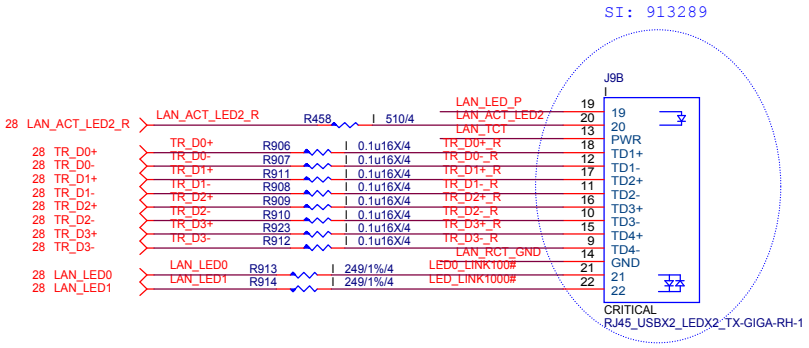

N58-22F0181-U30

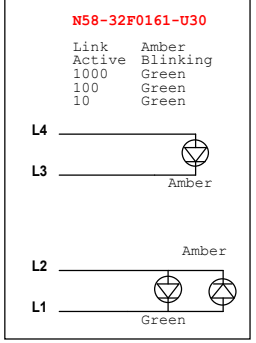

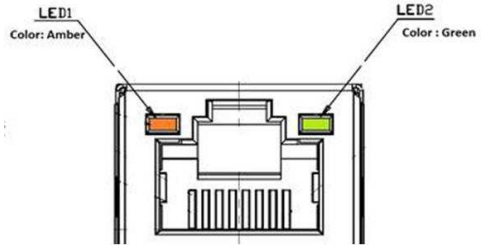

WOL ON	Speed	Active/Idle Mode		
		S0	S3/S4	S5
Active LED	1G Bit	Blink Amber	Blink Amber	Blink Amber
	100M Bit	Blink Amber	Blink Amber	Blink Amber
	10M Bit	Blink Amber	Blink Amber	Blink Amber
Link Speed LED	1G Bit	Green	Green	Green
	100M Bit	Green	Green	Green
	10M Bit	Green	Green	Green
WOL OFF		S0	S3/S4	S5
Active LED	1G Bit	Blink Amber	OFF	OFF
	100M Bit	Blink Amber	OFF	OFF
	10M Bit	Blink Amber	OFF	OFF
Link Speed LED	1G Bit	Green	OFF	OFF
	100M Bit	Green	OFF	OFF
	10M Bit	Green	OFF	OFF
Link OFF		S0	S3/S4	S5
Active LED	1G Bit	OFF	OFF	OFF
	100M Bit	OFF	OFF	OFF
	10M Bit	OFF	OFF	OFF
Link Speed LED	1G Bit	OFF	OFF	OFF
	100M Bit	OFF	OFF	OFF
	10M Bit	OFF	OFF	OFF

ESD

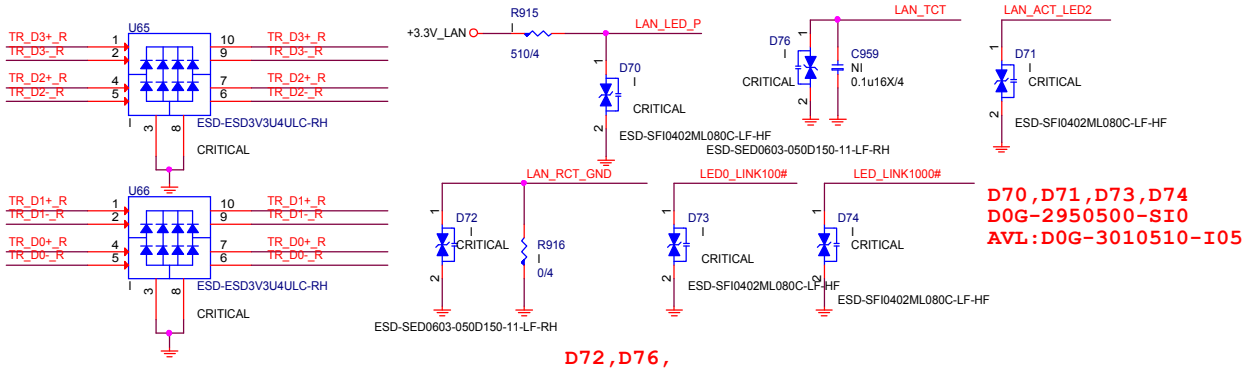

D70,D71,D73,D74
D0G-2950500-SI0
AVL:D0G-3010510-I05

D72,D76,
D0G-1500500-SI0
AVL:D0G-3500510-N47

SCHEMATIC

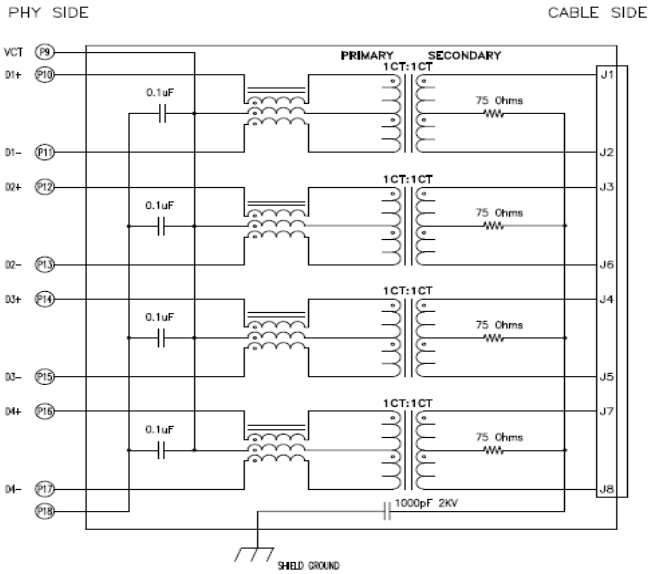

HP Restricted Secret

HEWLETT PACKARD

HP RESTRICTED

THIS DOCUMENET CONTAINS CONFIDENTIAL PROPRIETARY INFORMATION THAT IS HEWLETT-PACKARD (HP). DO NOT DISCLOSE TO OR DUPLICATE OTHERS EXCEPT AS AUTHORIZED BY HP.

DRAWN BY MICRO-STAR INT'L CO.,LTD

Title: LAN CONNECTOR

Size: Custom | Document Number: HP SCH P/N:803190-000(MSI MS-G013) | Rev: A

Date: Thursday, January 17, 2019 | Sheet 29 of 59

ALC 221 CODEC

B05-LC2212C-R09

https://vinafix.com

Install R341 for ALC221-VA

ALC221: Install R976, Un-Install R977
ALC221-VB:Un-install R976,Install R977

ALC221: Install FB12, Un-Install FB17
ALC221-VB:Un-install FB12,Install FB17

ALC221: Install R978, Un-Install C991
ALC221-VB:Un-install R978,Install C991

ALC221-VB: Install R417

ALC221: Install R979, Un-Install C992
ALC221-VB:Un-install R979,Install C992

Install R993 for ALC221-VB

ALC221: Install R991
ALC221-VB:Install R992

Install FB18, C973 for ALC221-VB

ALC221: Install C352
ALC221-VB:Un-install C352

place 0.1uf close to pin1 and pin9 each

ALC221-VB-CG-HF

(PORT-C)

teknisi indonesia

ALC221 JACK DETECT

All of JD resistors should be placed as close as possible to the sense pin of codec.

AUDIO AMPLIFIER ENABLE

EMI Solution

FRONT I/O AUDIO

REAR I/O AUDIO

AUDIO CODEC

1000pf stitch cap for EMI, and place close to jack

HP Restricted Secret

HEWLETT PACKARD	HP RESTRICTED
DRAWN BY	MICRO-STAR INT'L CO.,LTD
Title	Azalia Codec-ALC 221
Size: Custom	Document Number: HP SCH P/N:803190-000(MSI MS-G013) Rev: A
Date: Thursday, January 17, 2019	Sheet 30 of 59

AUDIO CODEC REGULATORS

https://vinafix.com

PN: 131-3156B09-A30

SI: 892625/892626

+5V_AUX

D78 ESD-TVNS52301AB0-RH

FB6 NI 220Ohm/1800mA/0.08Ohm/8

+5V_AVDD

U20 NI CRITICAL APL5156-SOT23-5-HF

+12V

R455 NI 0/6

AUDIO_+12V

C472 NI 10uF/16V/X5R/8

C471 NI 0.1uF/25V/Y5V/6

R396 NI 309K/4/1

R415 NI 100K/4/1

C461 I

C477 I 0.1uF/25V/Y5V/4

10uF/16V/X5R/8

R1

R2

U20_ADJ

R414 NI 1K/4

R413 NI 1K/4

16,19,27,32,39,40,43,44

SLP_S3#

AGND

SPEAKER HEADER

P/N:N32-1020521-F02

30 SPK_OUT-

30 SPK_OUT+

R234 I 0/8

R235 I 0/8

MONO_OUT-

MONO_OUT+

C466 NI C100p50N

C467 NI C100p50N

C473 NI C1u16X-HF

R416 NI 100K/4/1

MONO_RC

C475 NI 470pF/50V/X7R/4

P6 I BH1X2H-2.5PITCH_WHITE-HF

TABLE 14
SPEAKER HEADER DEFINITION

P6	
SPEAKER-	1
SPEAKER+	2

SPK+- TRACE WIDTH
Speaker 4 ohm ==> 40mils
Speaker 8 ohm ==> 20mils

SI: 946837

LINE1_VREFO_L
LINE1_VREFO_R
R397 I 4.7K/4
R398 I 4.7K/4

C997 I C4.7u10X50805-HF

C998 I C4.7u10X50805-HF

30 FRONT_MIC_R
30 FRONT_MIC_L

FRONT_MIC_R
FRONT_MIC_L

FRONT_MIC_R_R
FRONT_MIC_L_L

R399 I 1K/4
R400 I 1K/4

Port-C

R401 I 22K/4
R402 I 22K/4

Azalia Front Audio Connector

N31-2051491-H06

30 LINE1_VREFO

LINE1_VREFO

D25 I S-BAT54A-7-02-F_SOT23-3-HF

Y LINE1_VREFO_R
X LINE1_VREFO_L

D15 I CRITICAL ESD-SFI0402ML080C-LF-HF

D16 I CRITICAL ESD-SFI0402ML080C-LF-HF

+3.3V

R403 I 10K/4

SI: 913268

R453 NI 0/6
R452 I 0/6
C524 I 1000p50X/4

FRONT_AUD_DET#

FRONT_AUD_DET# 14

P23 I H2X5[8]M_BLUE-HF-1

BLUE

FRONTMIC_L
FRONTMIC_R
LINE_OUT_R
LINE_OUT_L

P23_P2
MIC_SNS
HP_SNS

MIC_SNS 30
HP_SNS 30

30 HP_R
30 HP_L

HP_R
HP_L

R404 I 75/4/1
R405 I 75/4/1

Port-I

C468 I 100p50N/4

D17 I CRITICAL ESD-SFI0402ML080C-LF-HF

D27 I CRITICAL ESD-SFI0402ML080C-LF-HF

Place those component close to audio connector.

J78	Double-stacked audio jack	line-in (top), headphone/line-out (bottom)

Rear audio jack

MIC2_VREFO_R
MIC2_VREFO_L
R406 I 4.7K/4
R407 I 4.7K/4

recommend place Mic bias resistor close to code

30 REAL_LINE-IN_L
30 REAL_LINE-IN_R

REAL_LINE-IN_L
REAL_LINE-IN_R

R409 I 1K/4
R408 I 1K/4

Port-E

J78A I

LINE_IN_L_REAL
LINE_IN_R_REAL
SA_C

30 SA_C

JACK-AUDIOX2F_GR/BU-HF-1

LITE BLUE

D40 I CRITICAL ESD-SFI0402ML080C-LF-HF

D39 I CRITICAL

ESD-SFI0402ML080C-LF-HF

J78B I

LINE_OUT_L_REAL
LINE_OUT_R_REAL
SA_D

30 SA_D

JACK-AUDIOX2F_GR/BU-HF-1

GREEN

30 LINE_FOUTL
30 LINE_FOUTR

LINE_FOUTL
LINE_FOUTR

R412 I 75/4/1
R411 I 75/4/1

Port-D

D41 I CRITICAL ESD-SFI0402ML080C-LF-HF

D44 I CRITICAL

ESD-SFI0402ML080C-LF-HF

C465 NI 470pF/50V/X7R/4

C462 NI 470pF/50V/X7R/4

AGNDA AGND

FOR EMI

N54-09F0331-L06

30 MIC2_VREFO

MIC2_VREFO

D26 NI S-BAT54A-7-02-F_SOT23-3-HF

Y MIC2_VREFO_R
X MIC2_VREFO_L

D15,D16,D17,D27,D39,D40,D41,D44
D0G-2950500-SI0
AVL:D0G-3010510-I05

HP Restricted Secret

HEWLETT PACKARD

HP RESTRICTED

THIS DOCUMENET CONTAINS CONFIDENTIAL PROPRIETARY INFORMATION THAT IS HEWLETT-PACKARD (HP). DO NOT DISCLOSE TO OR DUPLICATE OTHERS EXCEPT AS AUTHORIZED BY HP.

DRAWN BY MICRO-STAR INT'L CO.,LTD

Title: AUDIO CONNECTOR

Size: Custom | Document Number: HP SCH P/N:803190-000(MSI MS-G013) | Rev: A

Date: Thursday, January 17, 2019 | Sheet 31 of 59

https://vinafix.com

POWER CIRCUIT FOR USB PORT 2,3

P/N:I36-7534B02-U33

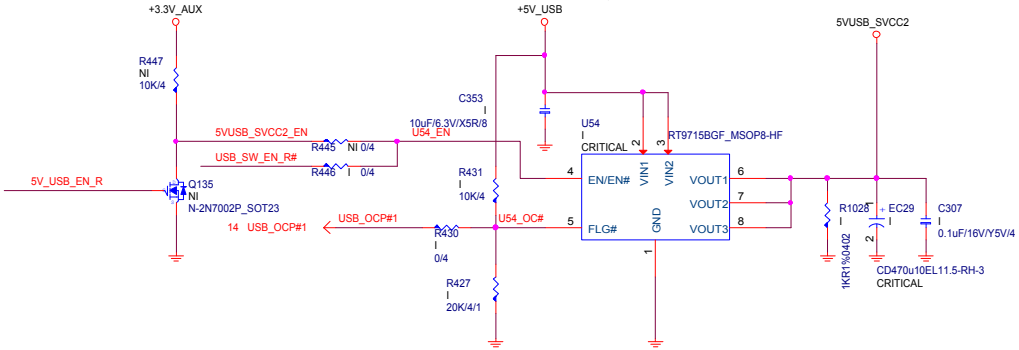

POWER CIRCUIT FOR USB PORT 0,1

P/N:I36-7534B02-U33

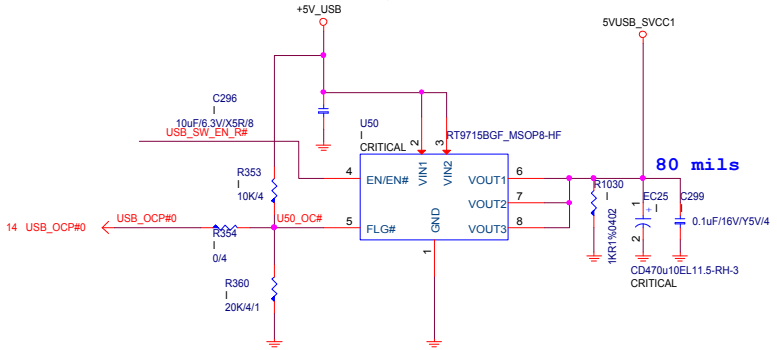

POWER CIRCUIT FOR USB PORT 10,11

P/N:I36-7534B02-U33

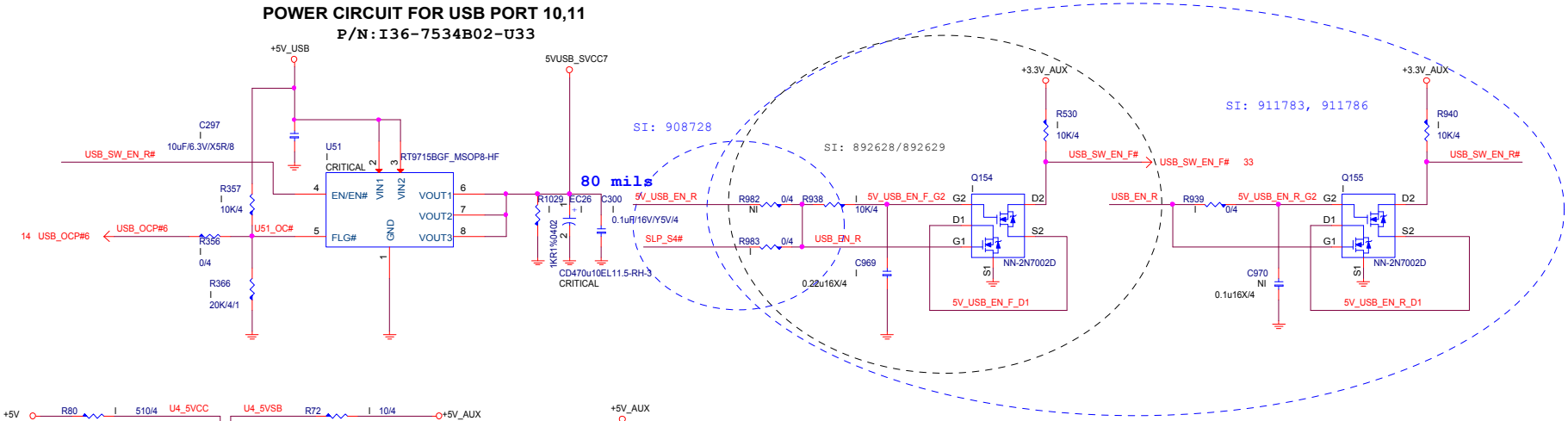

USB POWER

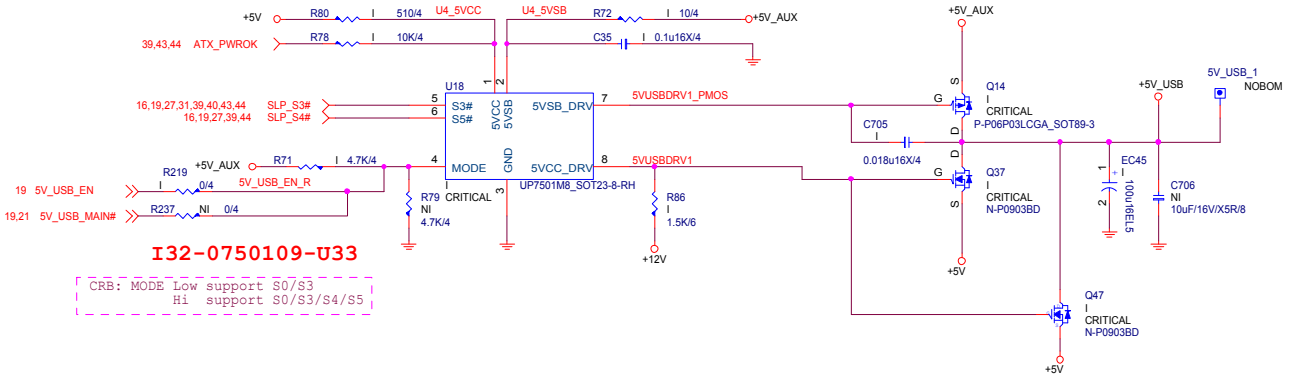

I32-0750109-U33

CRB: MODE Low support S0/S3
Hi support S0/S3/S4/S5

HP Restricted Secret

HEWLETT PACKARD	HP RESTRICTED	
DRAWN BY	MICRO-STAR INT'L CO.,LTD	
Title	Rear USB POWER	
Size: Custom	Document Number: HP SCH P/N:803190-000(MSI MS-G013)	Rev: A
Date: Thursday, January 17, 2019	Sheet 32 of 59	

https://vinafix.com

POWER CIRCUIT FOR USB PORT 4,5

P/N:I36-7534B02-U33

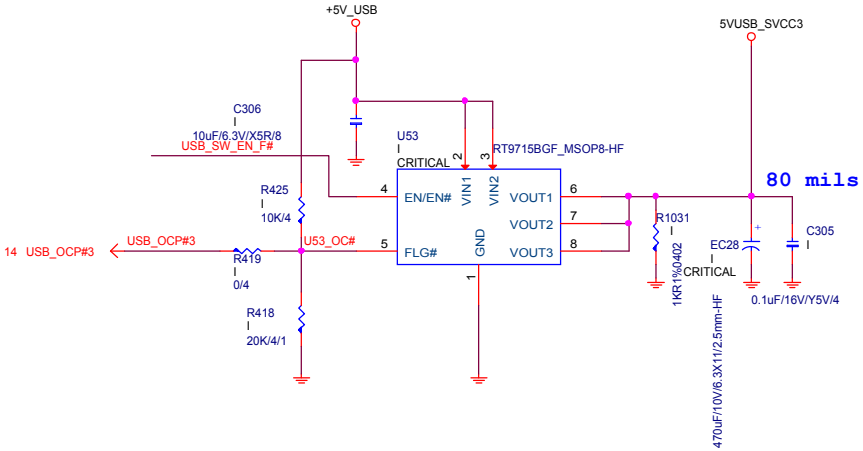

POWER CIRCUIT FOR USB PORT 8,9

P/N:I36-7534B02-U33

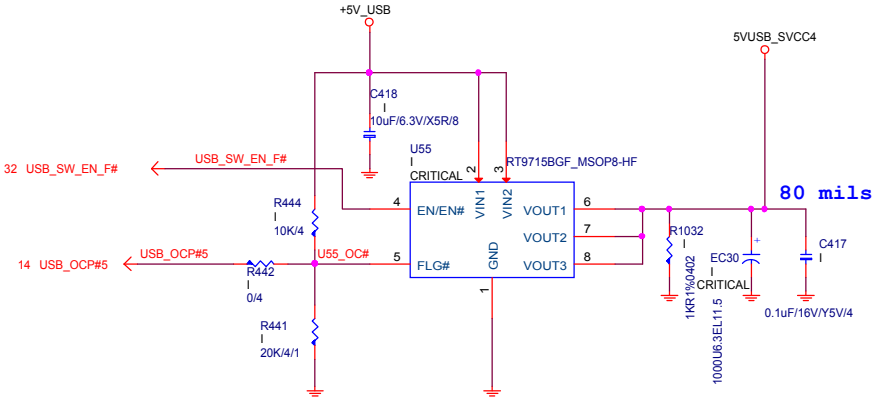

HP Restricted Secret

HEWLETT PACKARD	HP RESTRICTED THIS DOCUMENET CONTAINS CONFIDENTIAL PROPRIETARY INFORMATION THAT IS HEWLETT-PACKARD (HP). DO NOT DISCLOSE TO OR DUPLICATE OTHERS EXCEPT AS AUTHORIZED BY HP.	
DRAWN BY	MICRO-STAR INT'L CO.,LTD	
Title	Front USB POWER	
Size: Custom	Document Number: HP SCH P/N:803190-000(MSI MS-G013)	Rev: A
Date: Thursday, January 17, 2019	Sheet 33 of 59	

Internal USB Connector For USB Port 4

https://Vinafix.com

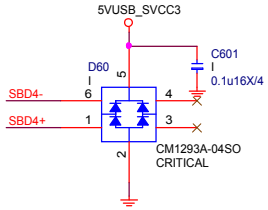

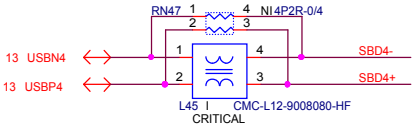

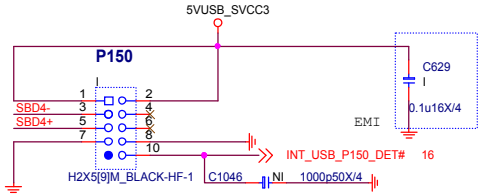

N31-2051BG1-H06
COLOR BLACK

Vinafix.com

HP Restricted Secret

HEWLETT PACKARD

HP RESTRICTED

THIS DOCUMENET CONTAINS CONFIDENTIAL PROPRIETARY INFORMATION THAT IS HEWLETT-PACKARD (HP). DO NOT DISCLOSE TO OR DUPLICATE OTHERS EXCEPT AS AUTHORIZED BY HP.

DRAWN BY	MICRO-STAR INT'L CO.,LTD
Title	USB2.0
Size: Custom	Document Number: HP SCH P/N:803190-000(MSI MS-G013)
Rev	A
Date:	Thursday, January 17, 2019
Sheet	34 of 59

Rear USB Connnector For USB Port 2/3

https://vinafix.com

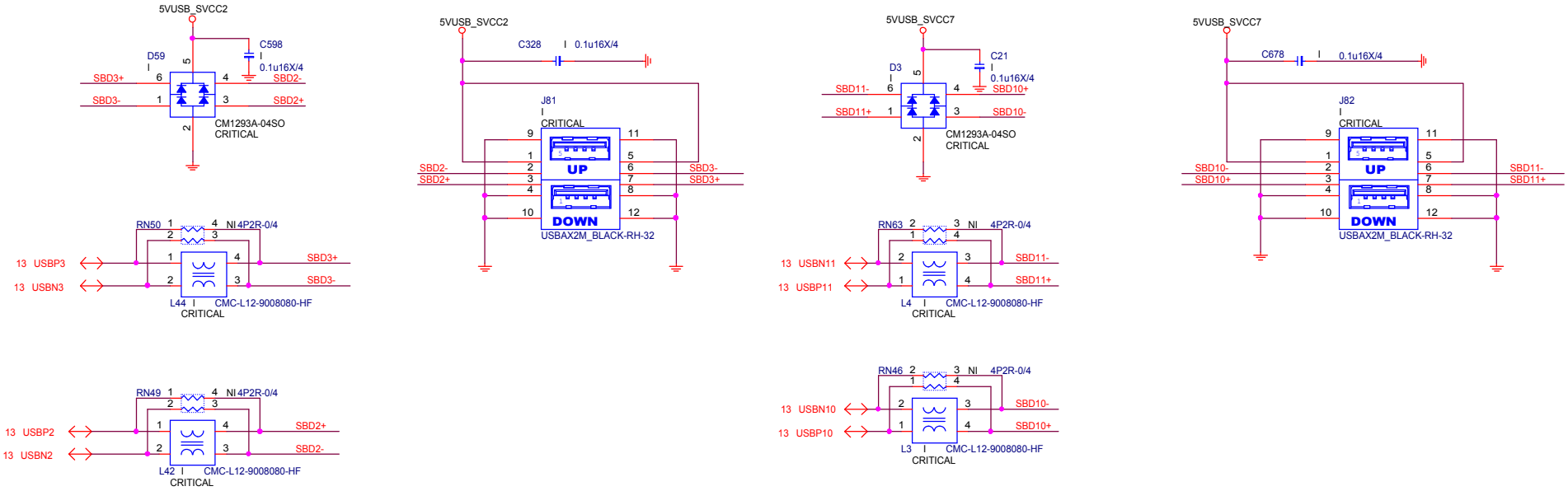

Rear USB Connnector For USB Port 12/ 13

Rear USB Connnector For USB Port 0/1

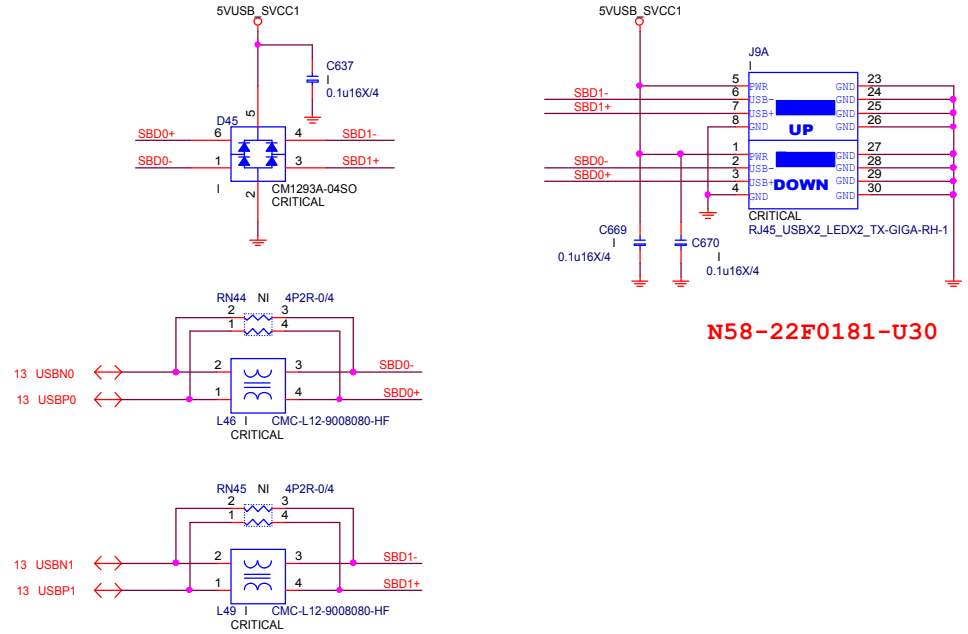

N58-22F0181-U30

HP Restricted Secret

HEWLETT PACKARD

HP RESTRICTED

THIS DOCUMENET CONTAINS CONFIDENTIAL PROPRIETARY INFORMATION THAT IS HEWLETT-PACKARD (HP). DO NOT DISCLOSE TO OR DUPLICATE OTHERS EXCEPT AS AUTHORIZED BY HP.

DRAWN BY	MICRO-STAR INT'L CO.,LTD
Title	Rear USB 2.0
Size: Custom	Document Number: HP SCH P/N:803190-000(MSI MS-G013)
Rev	A
Date:	Thursday, January 17, 2019
Sheet	35 of 59

FRONT USB3.0 Connnector For USB3.0 Port 1 / 2

https://vinafix.com

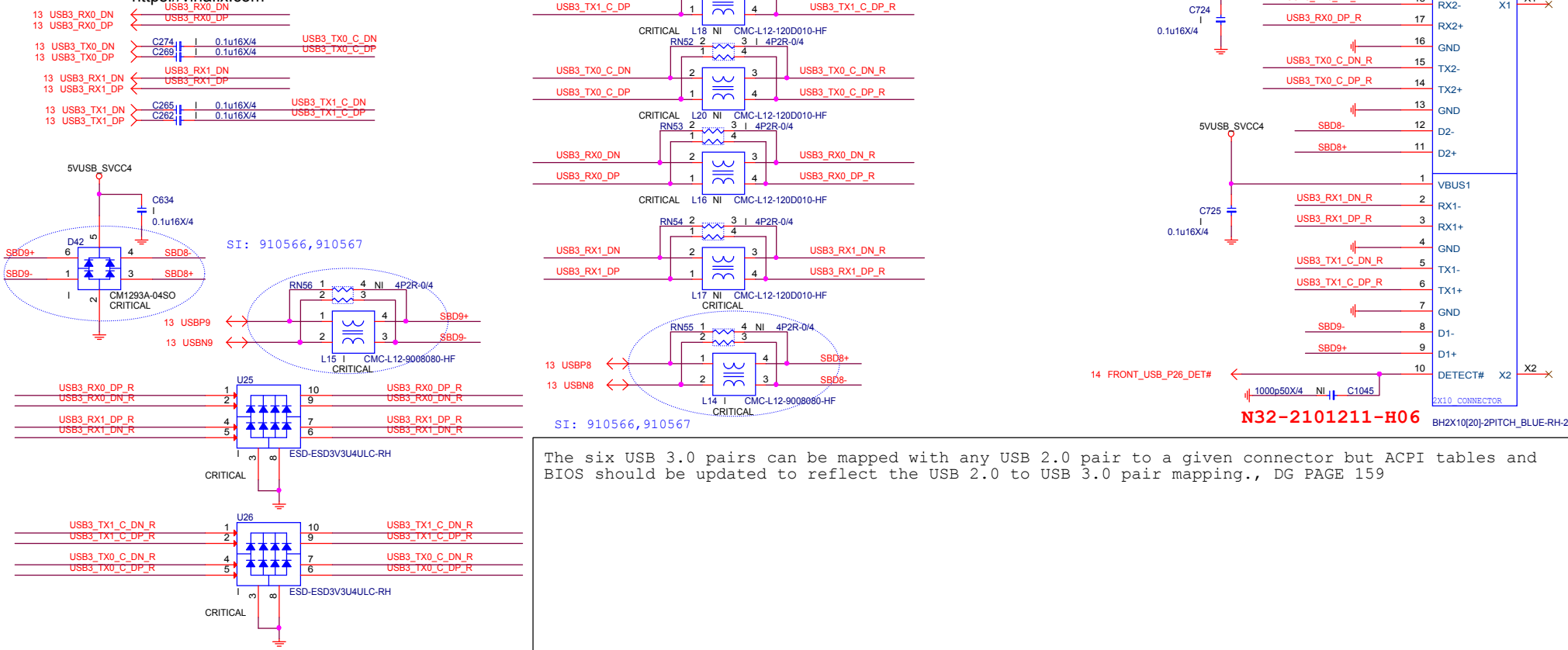

The six USB 3.0 pairs can be mapped with any USB 2.0 pair to a given connector but ACPI tables and BIOS should be updated to reflect the USB 2.0 to USB 3.0 pair mapping., DG PAGE 159

HP Restricted Secret

HEWLETT PACKARD	HP RESTRICTED
DRAWN BY	MICRO-STAR INT'L CO.,LTD
Title	Front USB 3.0
Size: Custom	Document Number: HP SCH P/N:803190-000(MSI MS-G013)
Rev	A
Date:	Thursday, January 17, 2019
Sheet	36 of 59

https://vinafix.com

SPI FLASH ROM

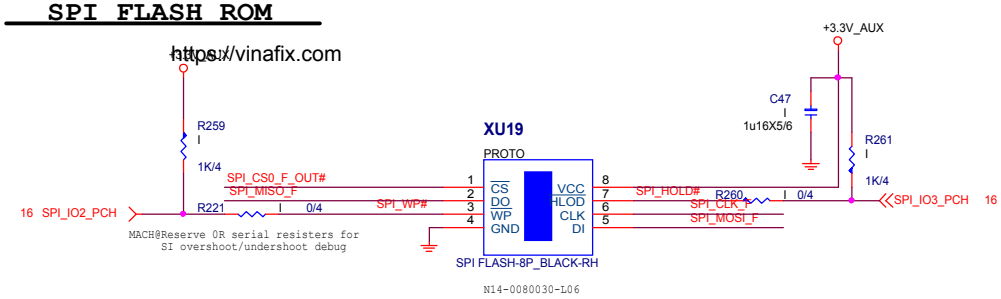

BIOS

U19
CRITICAL
SPI/64Mbit/SOP8

M31-25Q6443-W03

SPI DEBUG PROT

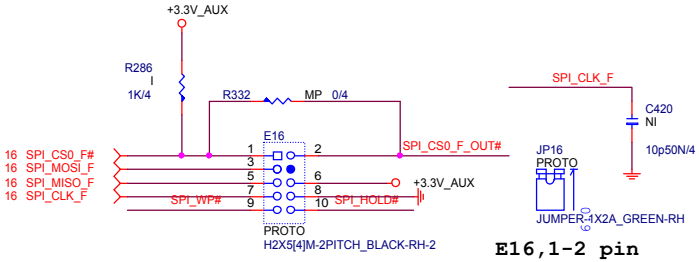

BOOT BLOCK WRITE JUMPER

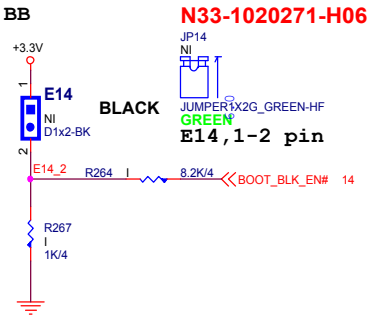

BOOT BLOCK RECOVERY HEADER

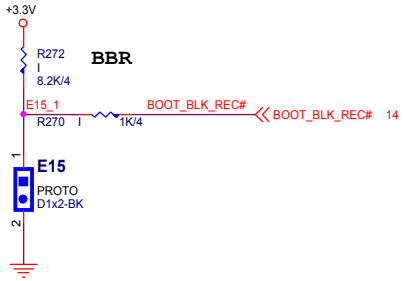

Flash Descriptor Override Header
(ME_DIS)

FLASH DESCRIPTOR OVERRIDE

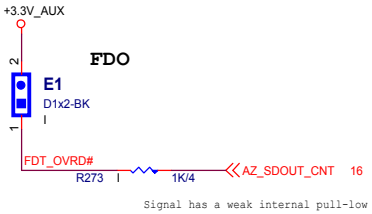

N31-1020151-H06

PASSWORD JUMPER

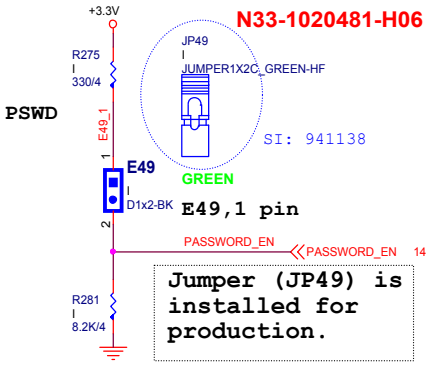

HP Restricted Secret

HEWLETT PACKARD

HP RESTRICTED

THIS DOCUMENET CONTAINS CONFIDENTIAL PROPRIETARY INFORMATION THAT IS HEWLETT-PACKARD (HP). DO NOT DISCLOSE TO OR DUPLICATE OTHERS EXCEPT AS AUTHORIZED BY HP.

DRAWN BY	MICRO-STAR INT'L CO.,LTD
Title	Header/ SPI
Size: Custom	Document Number: HP SCH P/N:803190-000(MSI MS-G013)
Rev	A
Date:	Thursday, January 17, 2019
Sheet	37 of 59

https://vinafix.com

FAN BLOCK

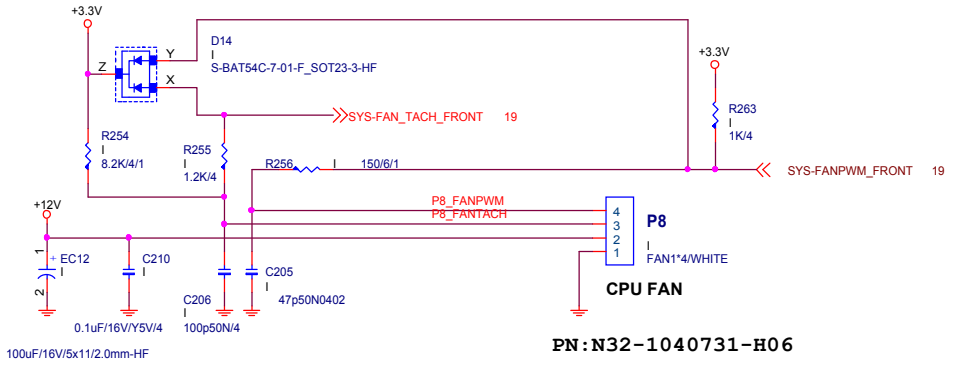

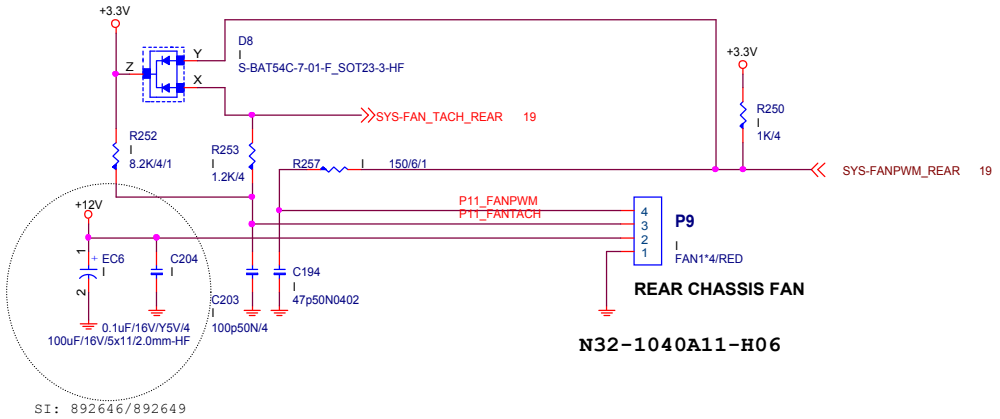

+5V_USB_SUS_ACK

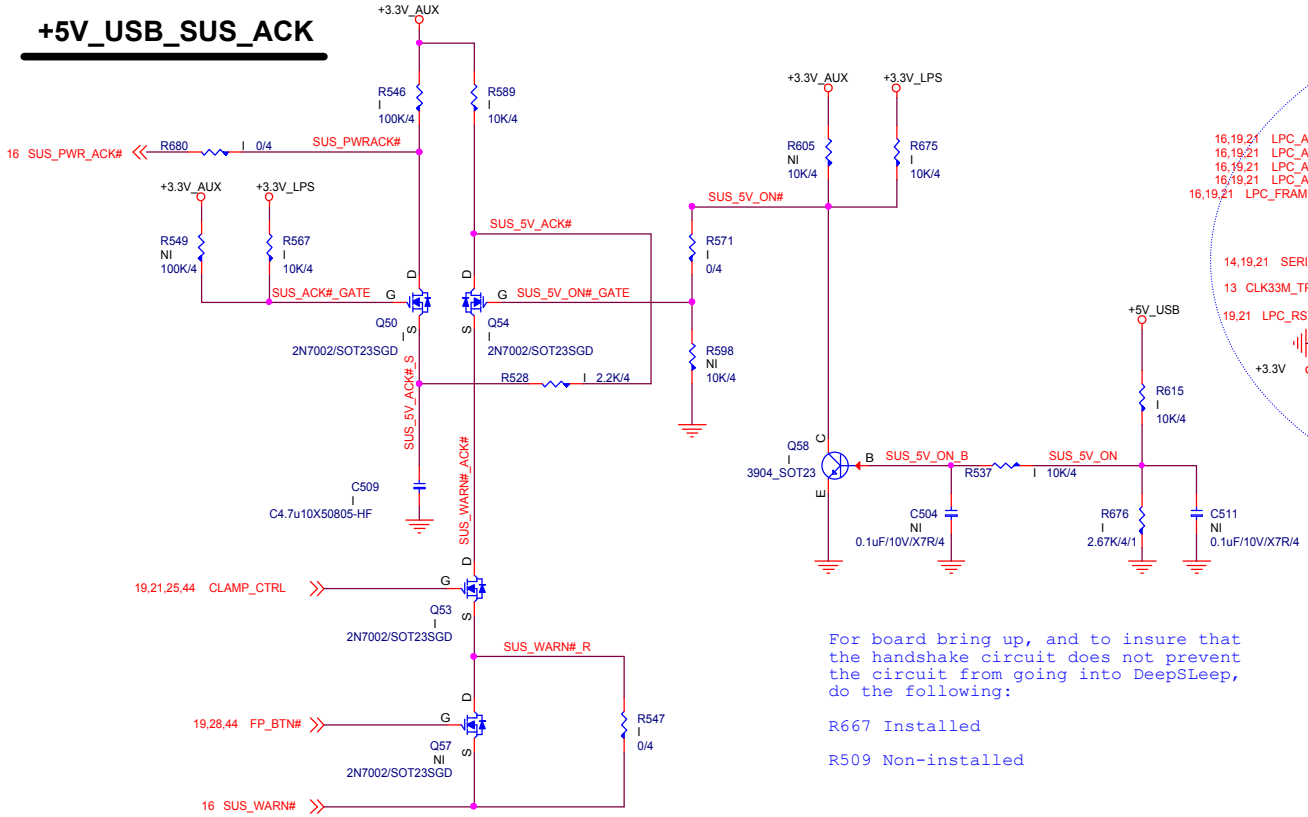

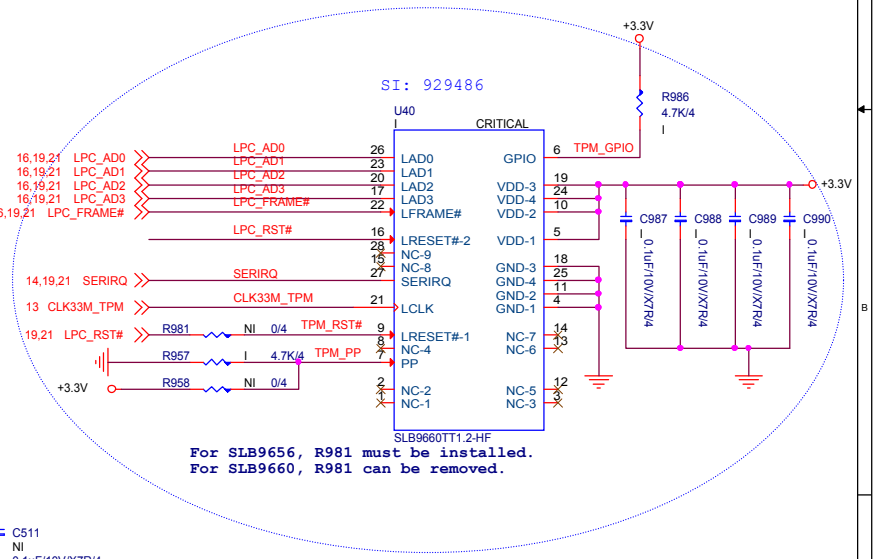

For board bring up, and to insure that the handshake circuit does not prevent the circuit from going into DeepSLeep, do the following:

R667 Installed

R509 Non-installed

HP Restricted Secret

HEWLETT PACKARD

HP RESTRICTED

THIS DOCUMENET CONTAINS CONFIDENTIAL PROPRIETARY INFORMATION THAT IS HEWLETT-PACKARD (HP). DO NOT DISCLOSE TO OR DUPLICATE OTHERS EXCEPT AS AUTHORIZED BY HP.

DRAWN BY	MICRO-STAR INT'L CO.,LTD
Title	FAN/ TPM
Size: Custom	Document Number: HP SCH P/N:803190-000(MSI MS-G013)
Rev	A
Date:	Thursday, January 17, 2019
Sheet	38 of 59

DDRIII DIMM Power

https://vinafix.com

Vout = 0.8[(R251+R246)/R251]

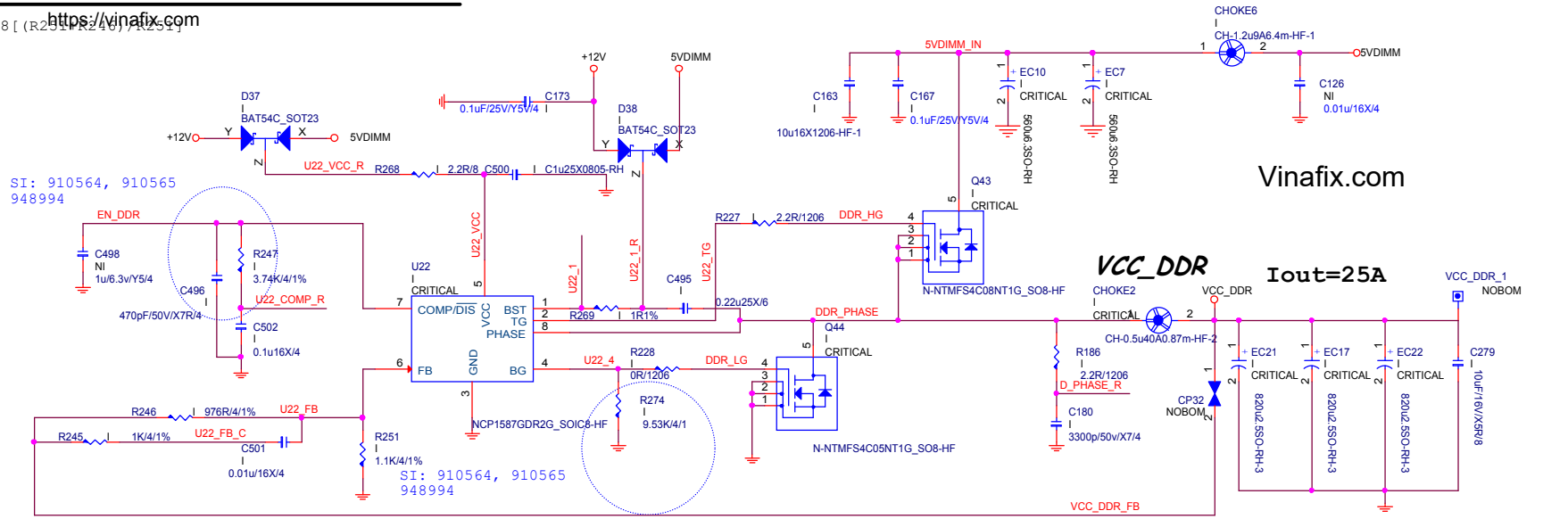

SI: 892651/892654

For special PSU sequence

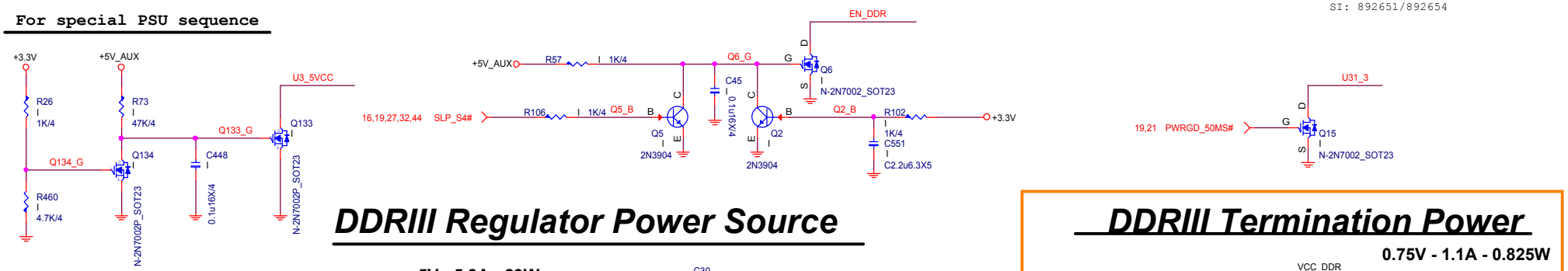

DDRIII Regulator Power Source

5V - 5.8A - 29W

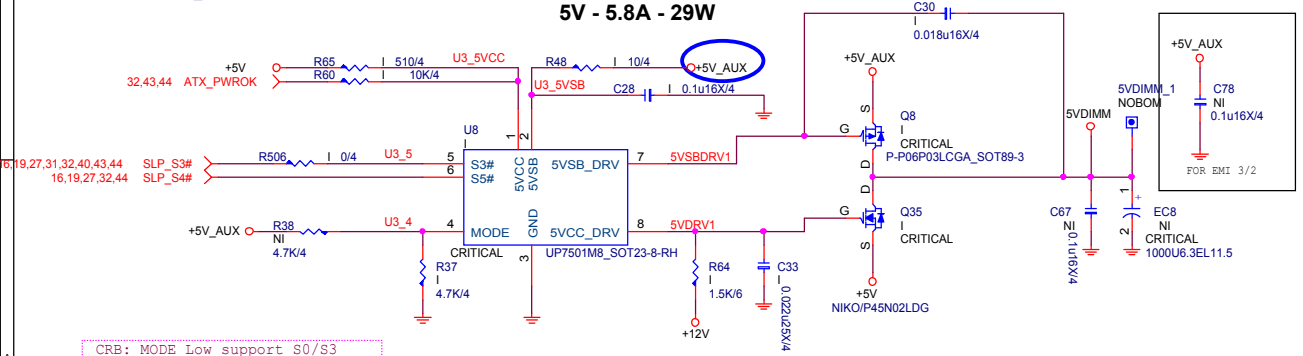

CRB: MODE Low support S0/S3
Hi support S0/S3/S5

I32-0750109-U33

5VDRV1 → 5VDRV1 43

DDRIII Termination Power

0.75V - 1.1A - 0.825W

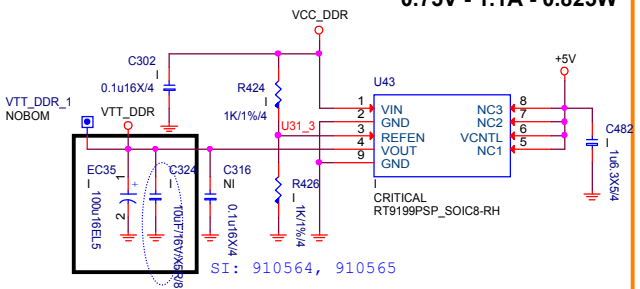

DDRIII I/O power decoulping caps.

HP Restricted Secret

HEWLETT PACKARD	HP RESTRICTED	
DRAWN BY	MICRO-STAR INT'L CO.,LTD	
Title	DDR Power	
Size: Custom	Document Number: HP SCH P/N:803190-000(MSI MS-G013)	Rev: A
Date: Thursday, January 17, 2019	Sheet 39 of 59	

https://vinafix.com

SharkBay VR12.5 Power Circuit - 4 Phase

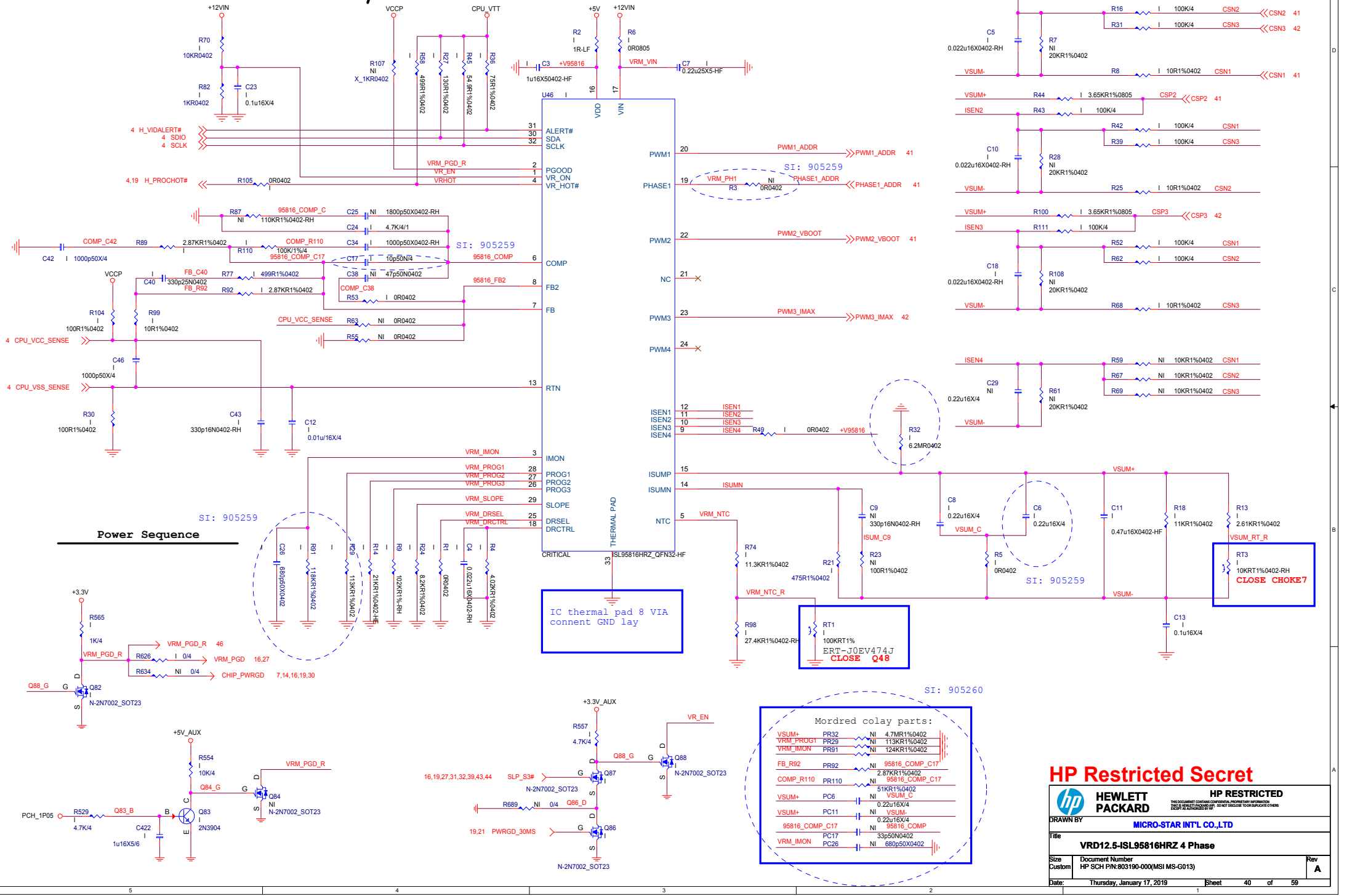

https://vinafix.com

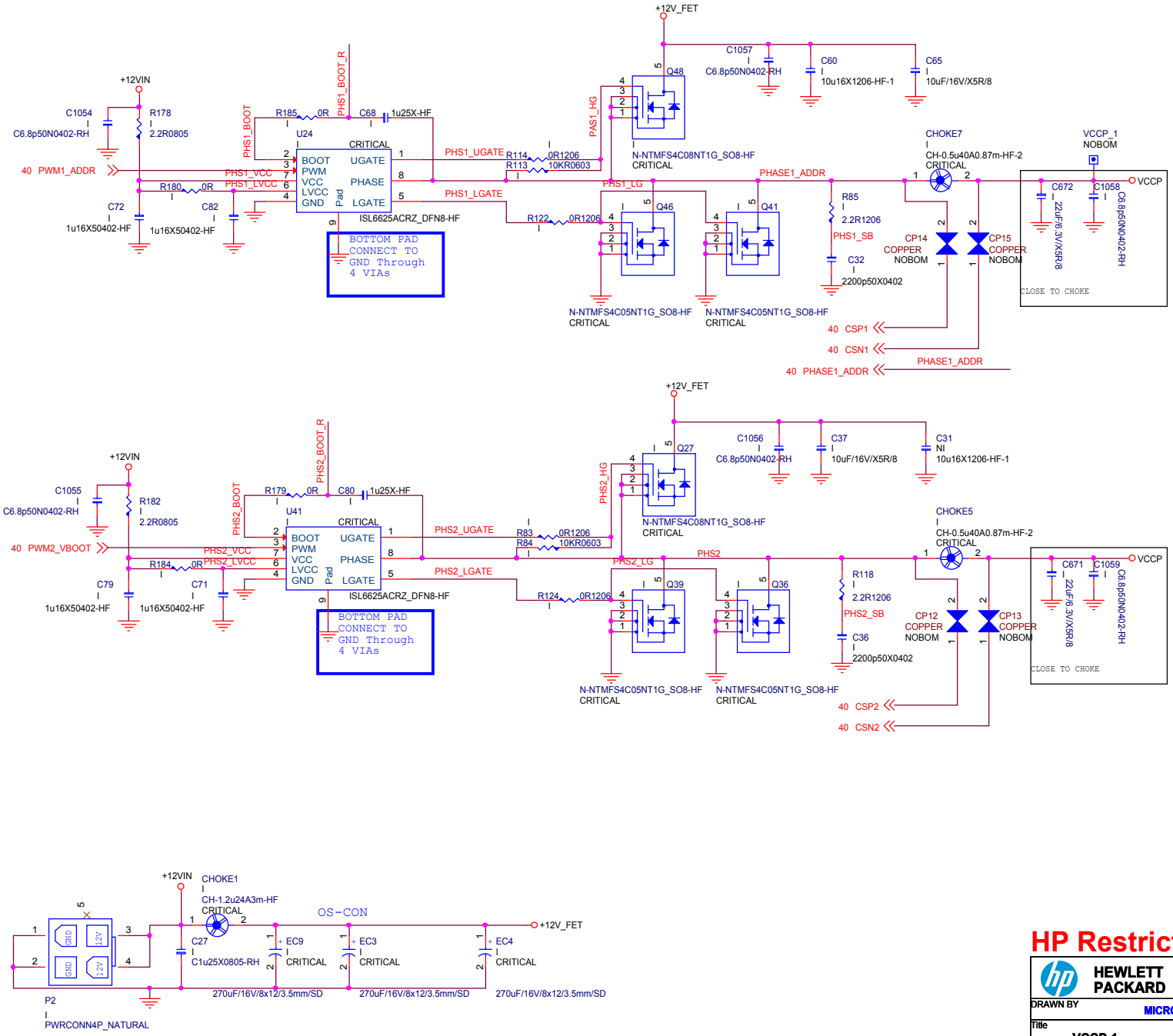

HP Restricted Secret

HEWLETT PACKARD	HP RESTRICTED	
DRAWN BY	MICRO-STAR INT'L CO.,LTD	
Title	VCCP-1	
Size: Custom	Document Number: HP SCH P/N:803190-000(MSI MS-G013)	Rev: A
Date: Thursday, January 17, 2019	Sheet 41 of 59	

https://vinafix.com

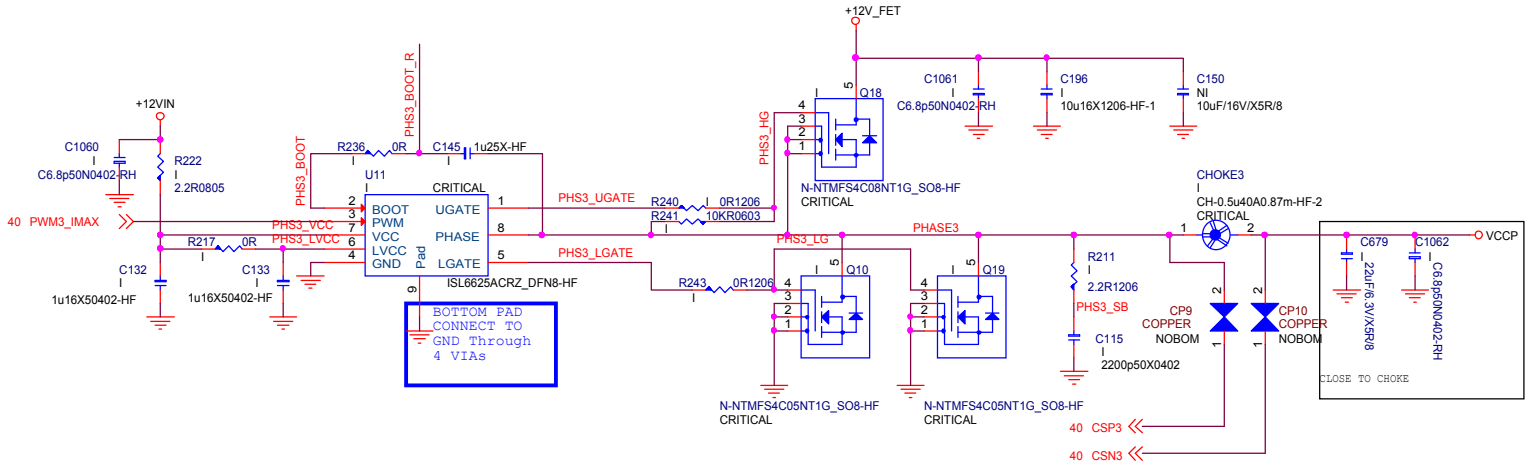

C71-5610611-N07

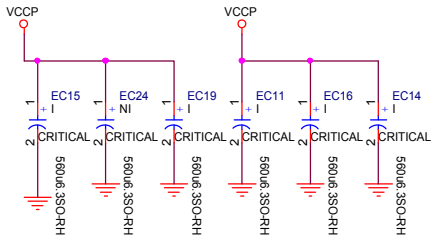

SI: 893441

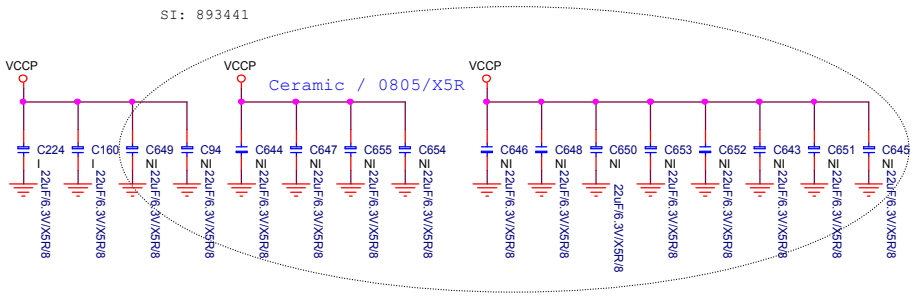

HP Restricted Secret

HEWLETT PACKARD

HP RESTRICTED

THIS DOCUMENET CONTAINS CONFIDENTIAL PROPRIETARY INFORMATION THAT IS HEWLETT-PACKARD (HP). DO NOT DISCLOSE TO OR DUPLICATE OTHERS EXCEPT AS AUTHORIZED BY HP.

DRAWN BY	MICRO-STAR INT'L CO.,LTD
Title	VCCP-2
Size: Custom	Document Number: HP SCH P/N:803190-000(MSI MS-G013)
Rev	A
Date:	Thursday, January 17, 2019
Sheet	42 of 59

https://vinafix.com

1.5V Power

SI: 930329

+5V
R476 10R/6
U32_4
C337 0.1u/16V/X/4
1P5_EN
32,39,44 ATX_PWROK
R459 NI 0/4
C326 NI 0.1u/16V/X/4
U32 CRITICAL
POK CNTL VOUT
EN
VIN
NC GND GND FB
GS7166SSO-R_PSOP8-HF
+3.3V
EC50 100u16EL5
C330 0.1u/16V/X/4
C327 1000pF/16V/X7R/4
U32_7
R467 976/1%/4
R461 1.1K/1%/4
C338 NI C10u6.3X5402-HF
C334 C10u6.3X5-HF-1
VCC1_5_1 NOBOM
VCC1_5
EC34 CRITICAL 1000U6.3EL11.5
1.5V/1.5A
SI: 930329
SI: 930329
I31-7133S02-N03

+5V_AUX
R515 10K/4
Q81_G
R513 10K/4
1P5_EN
Q81 N-2N7002_SOT23
PCH_1P05
R509 1K/4
Q75_B
Q75 2N3904
C421 1u16X5/6
Q85_D
R503 4.7K/4
16,19,27,31,32,39,40,44 SLP_S3#
Q85_B
Q85 N-2N7002_SOT23

PCH Core Power Control

+5V_AUX
R514 10K/4
Q74_G
R512 10K/4
PCH_1P05_EN
Q74 N-2N7002_SOT23
VCC_DDR
R505 1K/4
Q72_B
Q72 2N3904
C393 1u16X5/6
Q89_D
R690 0/4
19,21 12V_PG_25MS
Q89 NI N-2N7002_SOT23

+12V
C396 C1u25X0805-RH
C397 NI 100p50N/4
VCC_DDR
EC38 CRITICAL 1000U6.3EL11.5
PCH_1P05_EN
U36
EN VCC
GND DRV
FB SS
UP0115PMA6-ADJ_SOT23-6-HF
CRITICAL
U36_DRV
R510 100/1%/4
U36_DRV_R
Q77 CRITICAL N-P0903BD
U36_4
C391 0.01u/16X/4
R507 10K/1%/4
PCH_FB_C
C390 100p50N/4
C394 0.022u25X/4
R508 4.99K/1%/4
R504 16K/1%/4
PCH_FB
PCH_1P05_1 NOBOM
1.5V/5A
PCH_1P05
C395 0.1u/16V/X/4
C963 22uF/6.3V/X5R8
C964 22uF/6.3V/X5R8
EC40 CRITICAL 1000U6.3EL11.5

3V Standby Power

+5V_AUX
R520 10/4
U37_4
C404 1u6.3X5/4
39 5VDRV1
R1020 30R
Q49 CRITICAL N-45N02_TO252
3.3V/1.1A
SI: 911788, 911790
SI: 930329
Update- 2009.9.3
+3V_AUX_1 NOBOM
+3.3V_AUX
R1021 0R1206
R1022 0R1206
3V_AUX_VOUT
D82 NI S-10MQ040N_DO214AC
5VDRV1_Q
+3.3V_LPS
R519 100K/1%/4
U37_EN
+5V_AUX
C402 4.7u25X5/8
C968 1u6.3X5/4
U37
POK VCTRL VOUT
EN
VIN
VREF GND GND FB
CRITICAL
GS7166SSO-R_PSOP8-HF
C415 NI 33p50N0402
R2
R536 29.4K/1%/4
C419 10uF/16V/X5R8
EC47 CRITICAL CD100u16EL11-HF-1
Vo=0.8*(R1+R2)/R1
SI: 911788, 911790
I31-7133S02-N03
U37_7
R372 200K/4
5V_DRV1
R994 15K/1%/4
5VDRV1
R1
R538 10K/1%/4
Q166
PS_ON# 21,27,44
N-2N7002_SOT23

-12V POWER

SI: 902802
SI: 947863
U5_SWC
R524 0.15R/1206
+12V
U35
Driver SWC
IPK SWE
VCC TCAP
COMP GND
ON
CRITICAL
MC34063ADR2G_SOIC8-RH
U5_SWE
U5_TCAP
C49 1500pF50X7/4
D4 S-1N5817_DO214AC
CHOKE8 CH-22u2A34m-HF
0.1A
-12V
C48 0.1u25X5/4
C986 22u16X51206-HF
EC1 270u16SO-HF-3 CRITICAL
SI: 913454
EC36 CRITICAL 100uF/16V/5x11/2.0mm-HF
U5_COMP
R477 1.96K/6
R483 16.5K/6
SI: 913454

ATX_5VSB
R600 10/4
U42_4
C470 1u6.3X5/4
SI: 930329
+3_3V_LPS_1 NOBOM
3.3V/20mA
+3.3V_LPS
R604 4.7K/4
U42_EN
ATX_5VSB
ATX_5VSB
EC46 CRITICAL 470uF/10V/6.3x11/2.5mm
C453 4.7u25X5/8
U42
POK VCTRL VOUT
EN
VIN
VREF GND GND FB
CRITICAL
GS7166SSO-R_PSOP8-HF
C497 10p50N/4
U42_7
R648 324K/1%/4
R638 100K/1%/4
C499 10uF/16V/X5R/8
EC48 CRITICAL CD100u16EL11-HF-1
I31-7133S02-N03

teknisi indonesia

HP Restricted Secret

HEWLETT PACKARD	HP RESTRICTED	
DRAWN BY	MICRO-STAR INT'L CO.,LTD	
Title	PCH & ME Core Power	
Size: Custom	Document Number: HP SCH P/N:803190-000(MSI MS-G013)	Rev: A
Date: Thursday, January 17, 2019	Sheet 43 of 59	

ATX Power Connector / Front Panel / LED/DSW

manuals4you.com

ATX CONNECTOR

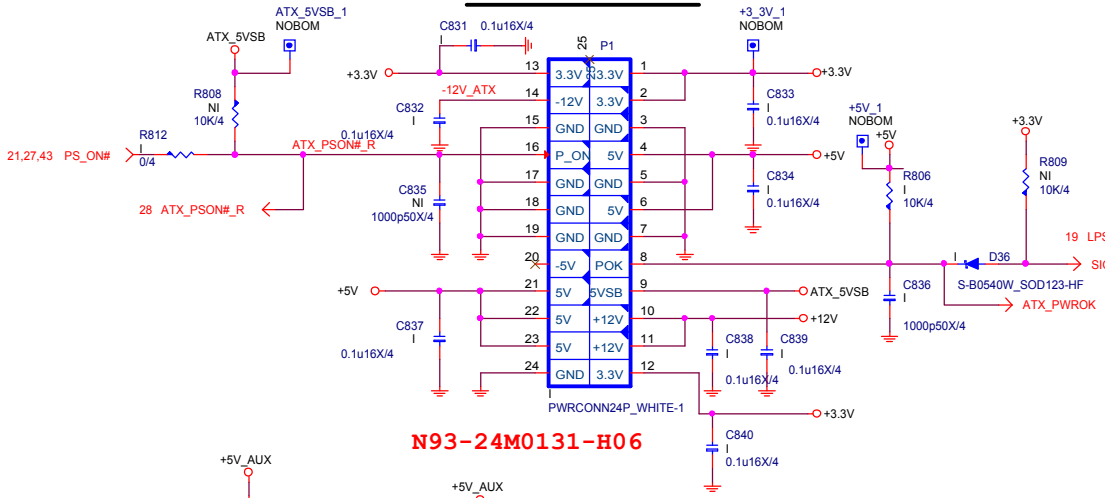

N93-24M0131-H06

+5V_AUX Power Switch

Tune ATX_5VSB inrush current to 2A from 4A

Trace Width 80mils.

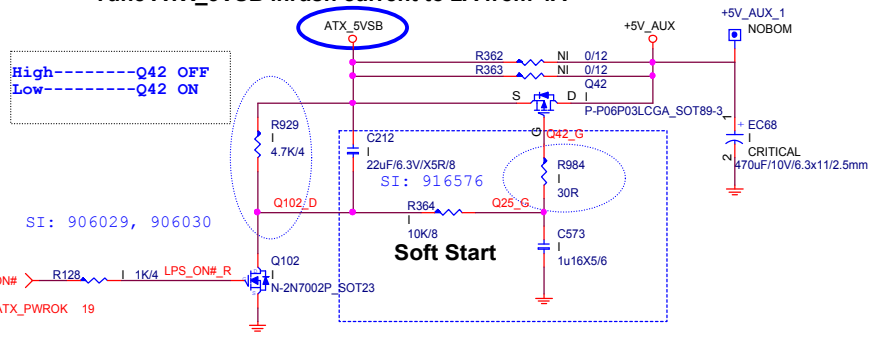

BLEED-OFF CIRCUIT

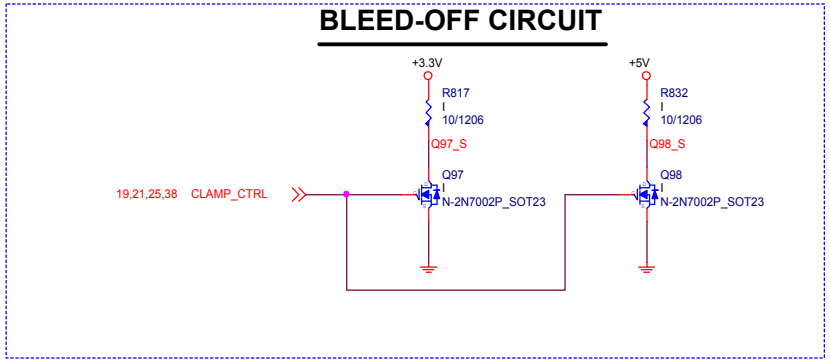

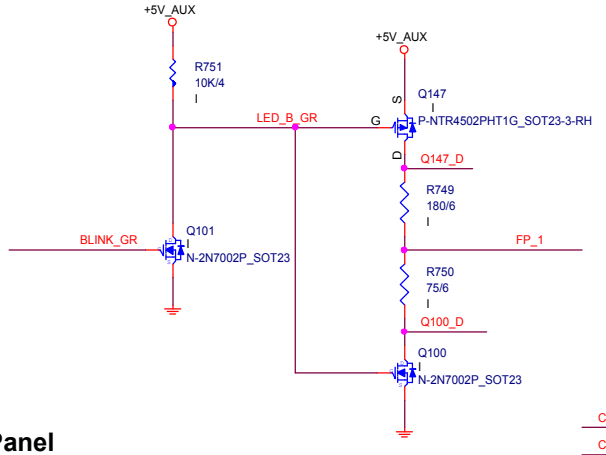

Front Panel

PN:N31-2051641-H06

CHASSIS ID[1:0]

Chassis	Chassis ID[1:0]
No cable attached	11
SFF EntL11	01
MT EntL11	01

SI: 893677, 936453

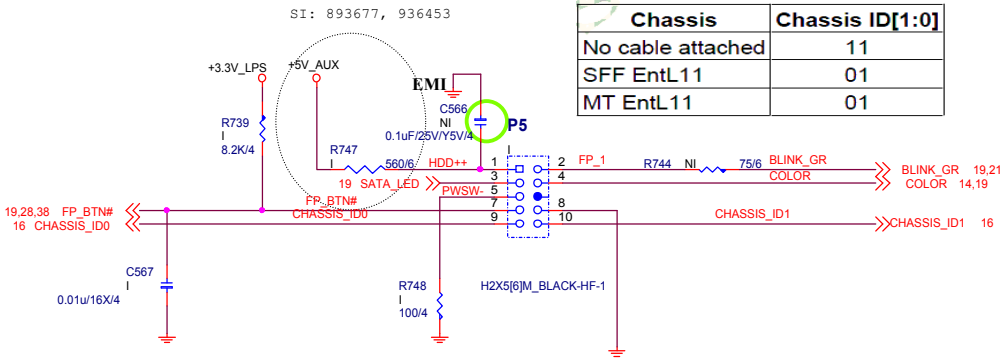

SI: 892659/892663

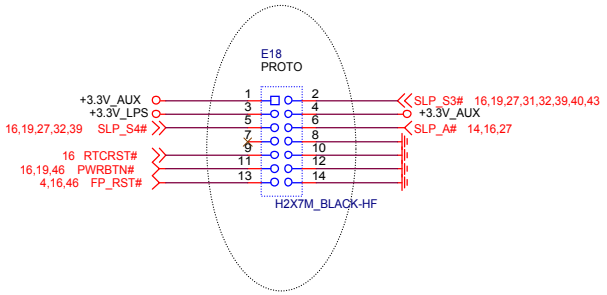

HP Restricted Secret

HEWLETT PACKARD	HP RESTRICTED	
DRAWN BY	MICRO-STAR INT'L CO.,LTD	
Title	ATX/F_Panel/EMI	
Size: Custom	Document Number: HP SCH P/N:803190-000(MSI MS-G013)	Rev: A
Date: Thursday, January 17, 2019	Sheet 44 of 59	

EMI CAPs

https://vinafix.com

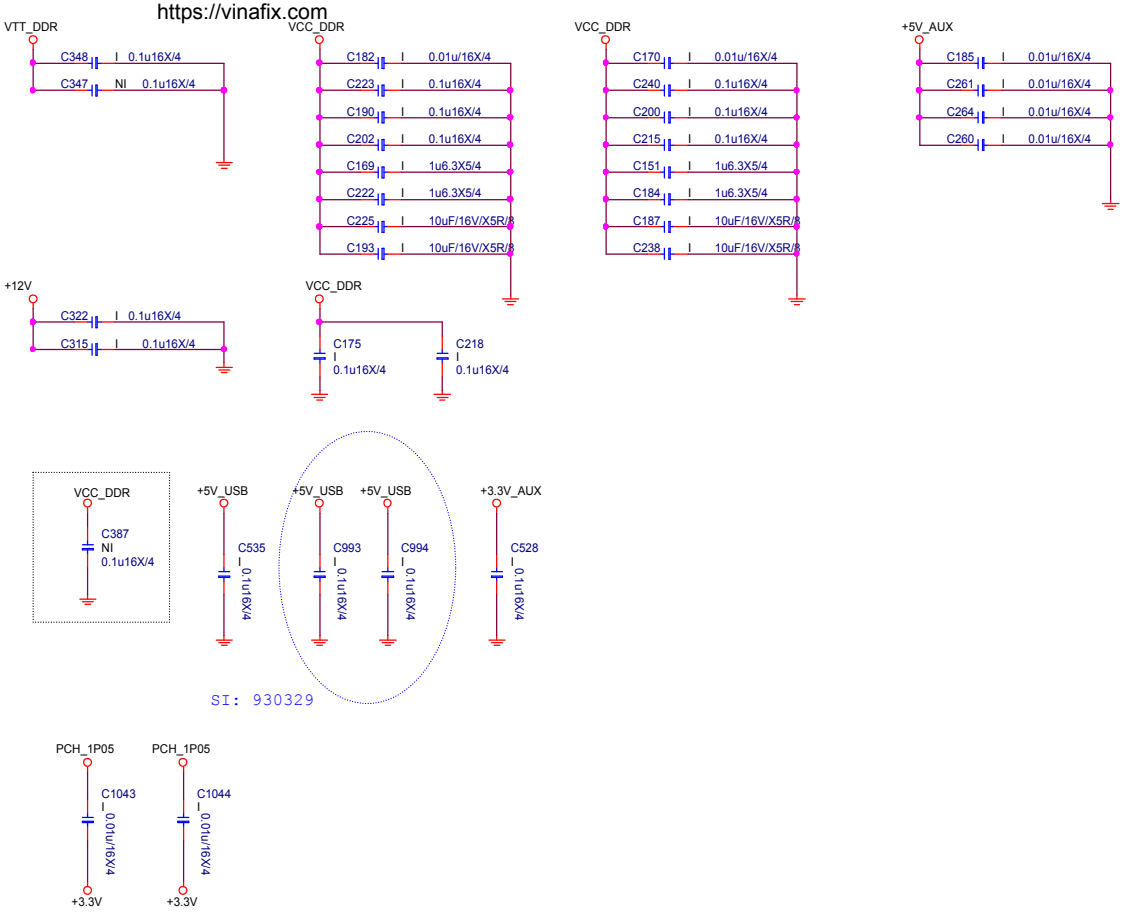

HP Restricted Secret

HEWLETT PACKARD	HP RESTRICTED THIS DOCUMENET CONTAINS CONFIDENTIAL PROPRIETARY INFORMATION THAT IS HEWLETT-PACKARD (HP). DO NOT DISCLOSE TO OR DUPLICATE OTHERS EXCEPT AS AUTHORIZED BY HP.	
DRAWN BY	MICRO-STAR INT'L CO.,LTD	
Title	EMI cap	
Size: Custom	Document Number: HP SCH P/N:803190-000(MSI MS-G013)	Rev: A
Date: Thursday, January 17, 2019	Sheet 45 of 59	

https://vinafix.com

Reserve debug port 5020

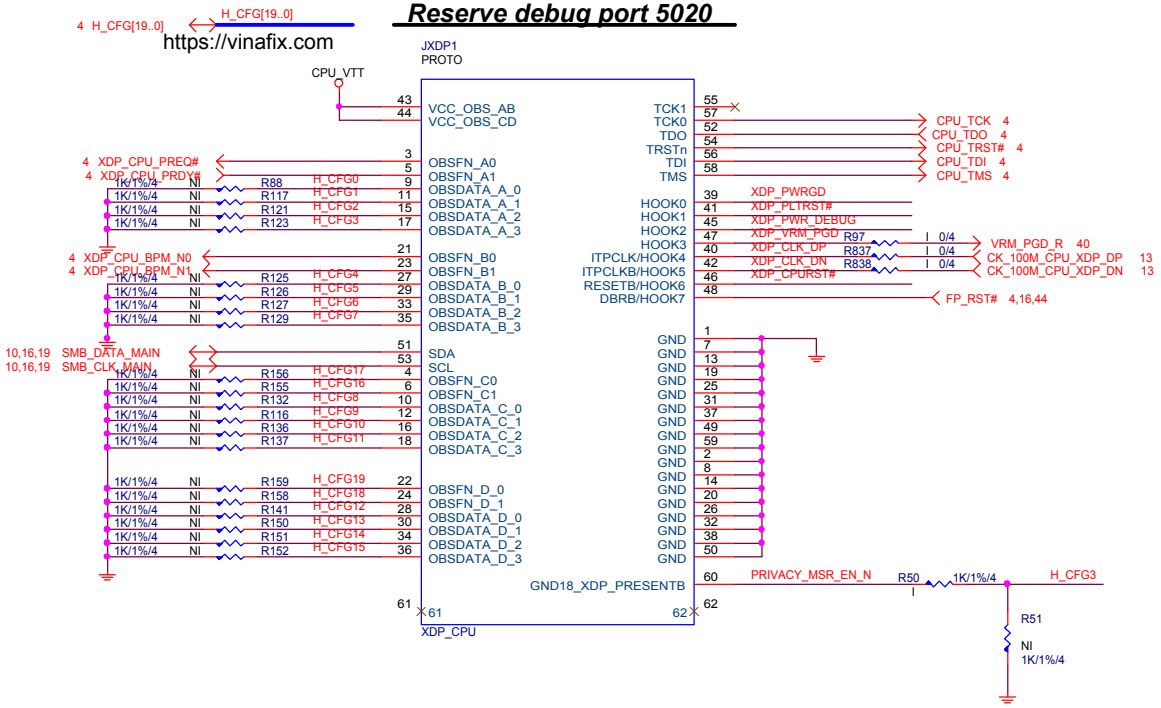

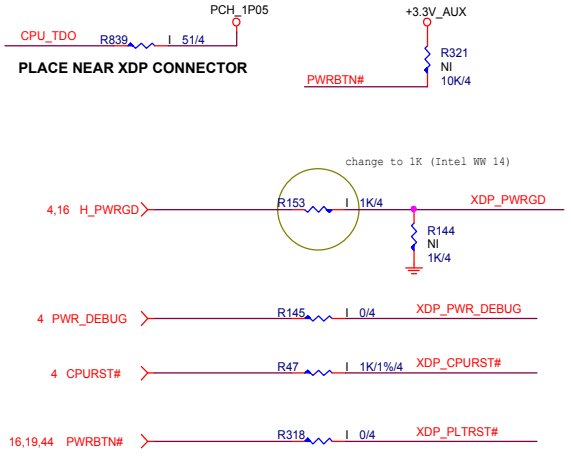

Vinafix.com

HP Restricted Secret

HEWLETT PACKARD
HP RESTRICTED
THIS DOCUMENET CONTAINS CONFIDENTIAL PROPRIETARY INFORMATION THAT IS HEWLETT-PACKARD (HP). DO NOT DISCLOSE TO OR DUPLICATE OTHERS EXCEPT AS AUTHORIZED BY HP.

DRAWN BY	MICRO-STAR INT'L CO.,LTD
Title	CPU/PCH/DMI XDP
Size: Custom	Document Number: HP SCH P/N:803190-000(MSI MS-G013)
Rev	A
Date: Thursday, January 17, 2019	Sheet 46 of 59

https://vinafix.com

Manual Parts

PCB1 I

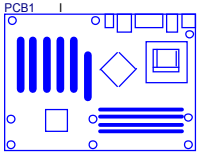

CRITICAL PCB1

P30-0G01310-E48
AVL: P30-0G01310-G37

XU1_X2
I
E93-0000099-A21

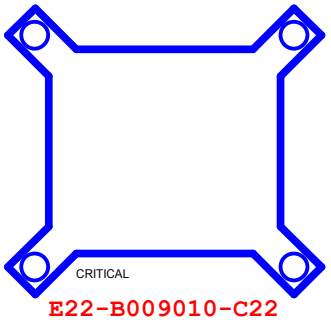

CRITICAL

E22-B009010-C22
AVL:E93-0000099-A21

BIOS_LA1

BIOS LABEL

XU1_X1
CPU SOCKET I
CRITICAL

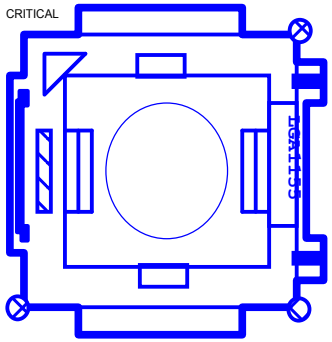

E21-AC71010-L06
AVL:E21-7826010-F02

Simulation

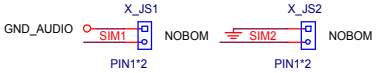

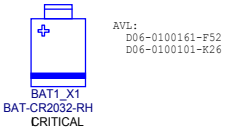

D06-0100101-P01

Optics Orientation Holes

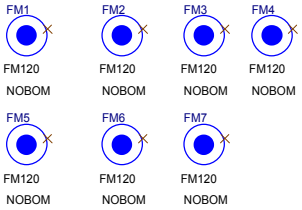

Mounting Holes

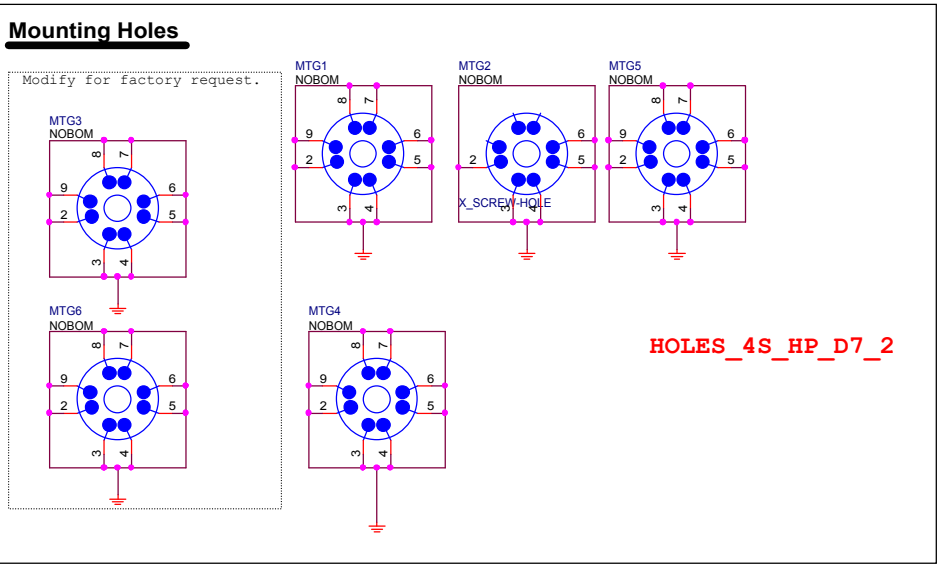

HOLES_4S_HP_D7_2

HP Restricted Secret

HEWLETT PACKARD

HP RESTRICTED

THIS DOCUMENET CONTAINS CONFIDENTIAL PROPRIETARY INFORMATION THAT IS HEWLETT-PACKARD (HP). DO NOT DISCLOSE TO OR DUPLICATE OTHERS EXCEPT AS AUTHORIZED BY HP.

DRAWN BY	MICRO-STAR INT'L CO.,LTD
Title	Manual & Option Parts
Size: Custom	Document Number: HP SCH P/N:803190-000(MSI MS-G013)
Rev	A
Date:	Thursday, January 17, 2019
Sheet	47 of 59

https://vinafix.com

HP Restricted Secret

HEWLETT PACKARD

HP RESTRICTED

THIS DOCUMENT CONTAINS CONFIDENTIAL PROPRIETARY INFORMATION THAT IS HEWLETT-PACKARD (HP). DO NOT DISCLOSE TO OR DUPLICATE OTHERS EXCEPT AS AUTHORIZED BY HP.

DRAWN BY MICRO-STAR INT'L CO.,LTD

Title: PCIe to PCI Bridge

Size	Document Number	Rev
Custom	HP SCH P/N:803190-000(MSI MS-G013)	A

Date: Thursday, January 17, 2019 Sheet 48 of 59

https://vinafix.com

HP Restricted Secret

HEWLETT PACKARD

HP RESTRICTED

THIS DOCUMENET CONTAINS CONFIDENTIAL PROPRIETARY INFORMATION THAT IS HEWLETT-PACKARD (HP). DO NOT DISCLOSE TO OR DUPLICATE OTHERS EXCEPT AS AUTHORIZED BY HP.

DRAWN BY MICRO-STAR INT'L CO.,LTD

Title: PCI SLOT

Size: Custom | Document Number: HP SCH P/N:803190-000(MSI MS-G013) | Rev: A

Date: Thursday, January 17, 2019 | Sheet 49 of 59

G3 w/RTC Loss to S4/S5 (With Deep Sx Support) Timing Diagram

https://vinafix.com

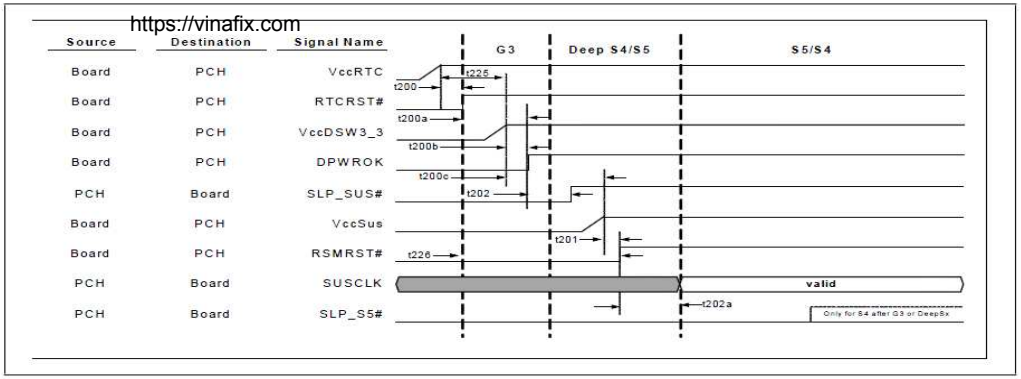

S5 to S0 Timing Diagram

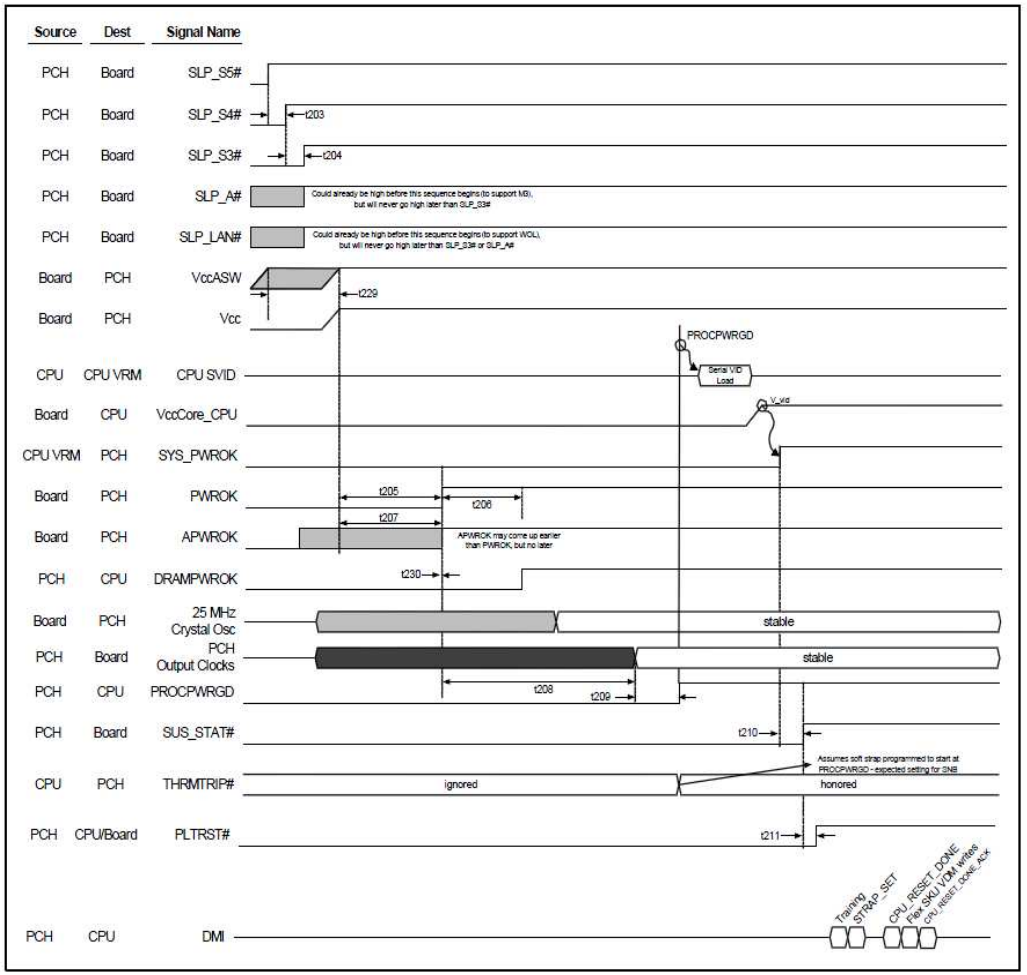

G3-S5

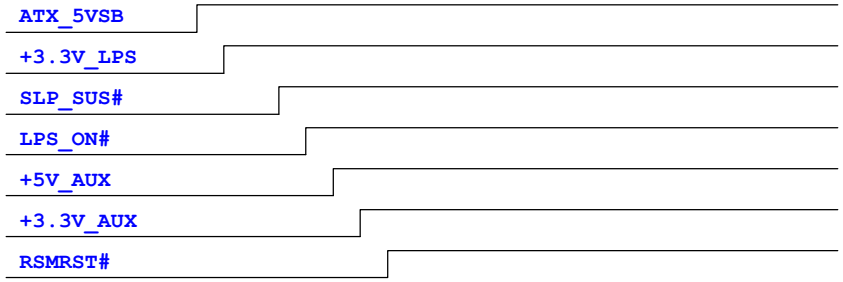

S5-S0

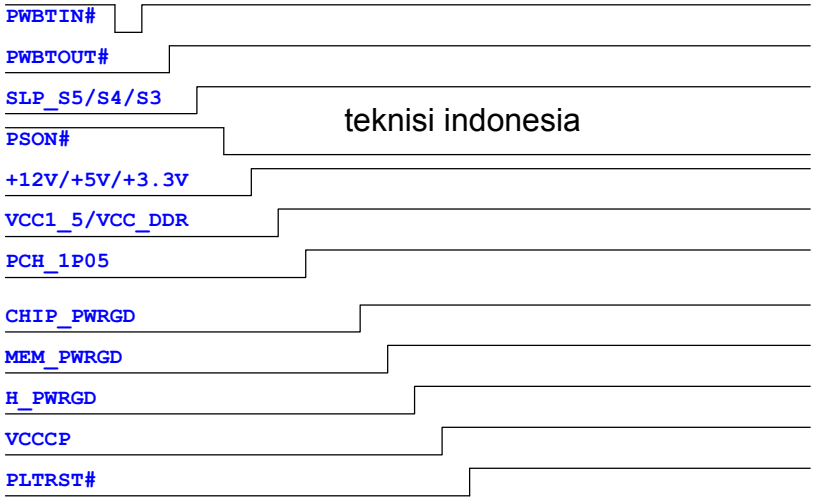

teknisi indonesia

HP Restricted Secret

HEWLETT PACKARD	HP RESTRICTED	
DRAWN BY	MICRO-STAR INT'L CO.,LTD	
Title	PON	
Size: Custom	Document Number: HP SCH P/N:803190-000(MSI MS-G013)	Rev: A
Date: Thursday, January 17, 2019	Sheet 50 of 59	

https://vinafix.com

PWROK MAP

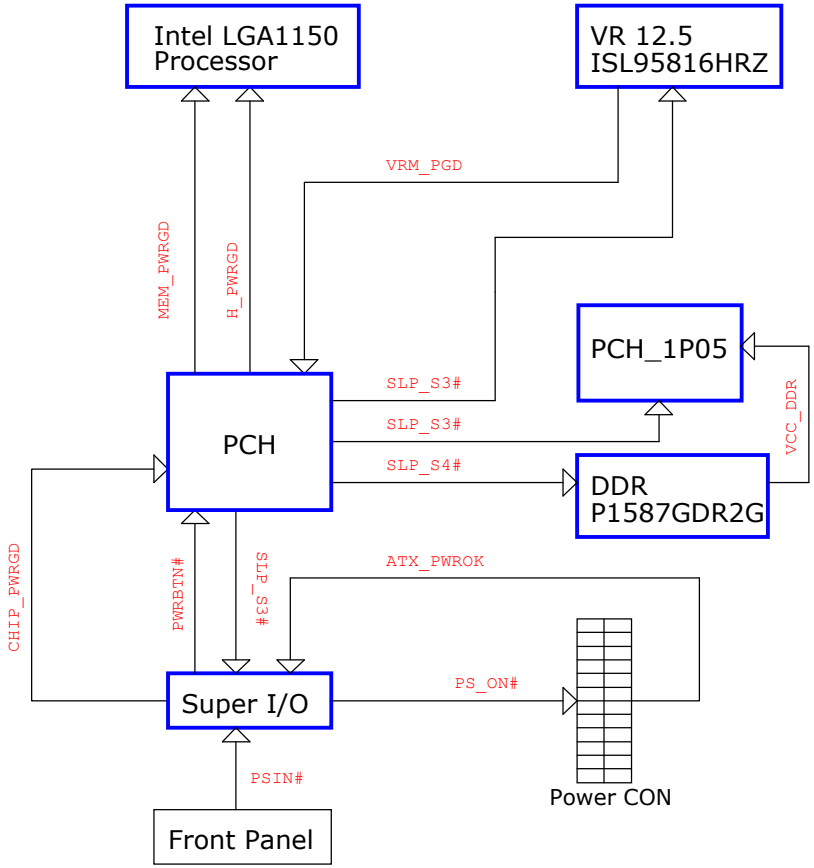

RESET MAP

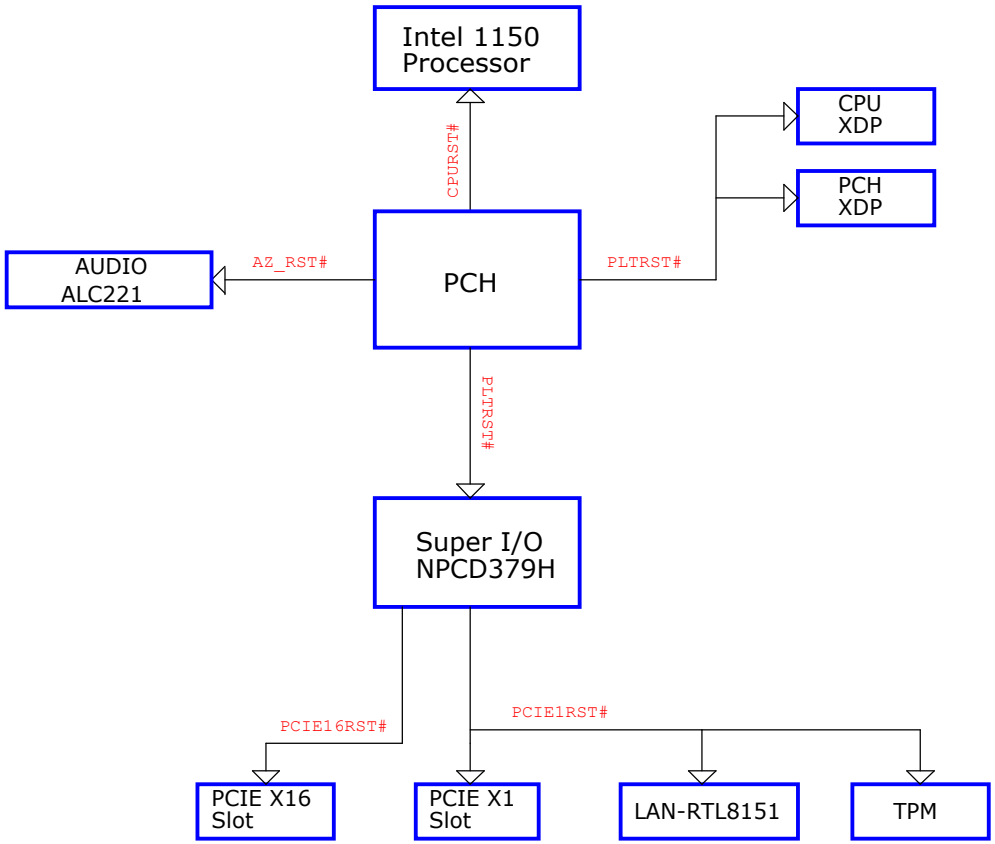

HP Restricted Secret

HEWLETT PACKARD	HP RESTRICTED	
DRAWN BY	MICRO-STAR INT'L CO.,LTD	
Title	Pwrok/Reset	
Size: Custom	Document Number: HP SCH P/N:803190-000(MSI MS-G013)	Rev: A
Date: Thursday, January 17, 2019	Sheet 51 of 59	

https://vinafix.com

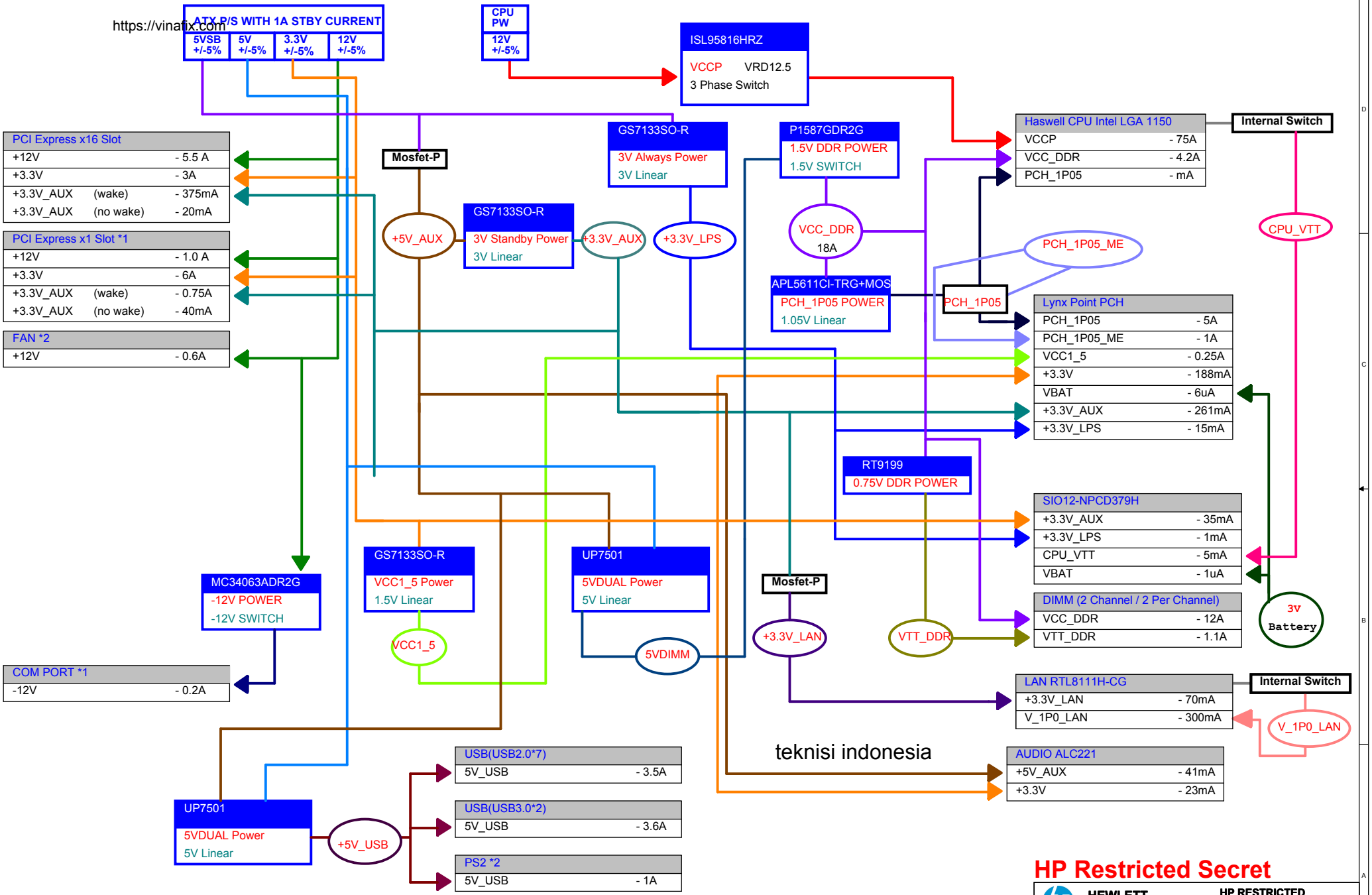

HP Restricted Secret

HEWLETT PACKARD

HP RESTRICTED

THIS DOCUMENET CONTAINS CONFIDENTIAL PROPRIETARY INFORMATION THAT IS HEWLETT-PACKARD (HP). DO NOT DISCLOSE TO OR DUPLICATE OTHERS EXCEPT AS AUTHORIZED BY HP.

DRAWN BY MICRO-STAR INT'L CO.,LTD

Title: Power Map

Size: Custom | Document Number: HP SCH P/N:803190-000(MSI MS-G013) | Rev: A

Date: Thursday, January 17, 2019 | Sheet 52 of 59

PCH

https://vinafix.com

GPIO	I/O/NC	Power	Tol	Default	MB Function
GPIO[0]	I/O	Main	3.3V	GPI	**FRONT_USB_P24_DET#**
GPIO[1]	I/O	Main	3.3V	GPI	**PCH_GPIO1**
GPIO[2]	I/O	Main	5V	GPI	**PCH_GPIO2**
GPIO[3]	I/O	Main	5V	GPI	PCH_GPIO3
GPIO[4]	I/O	Main	5V	GPI	PCH_GPIO4
GPIO[5]	I/O	Main	5V	GPI	PCH_GPIO5
GPIO[6]	I/O	Main	3.3V	GPI	IO_SMI#
GPIO[7]	I/O	Main	3.3V	GPI	PCH_GPIO7
GPIO[8]	I/O	Resume	3.3V	GPO	PCH_GPIO8
GPIO[9]	I/O	Resume	3.3V	Native	**USB_OCP#5**
GPIO[10]	I/O	Resume	3.3V	Native	**USB_OCP#6**
GPIO[11]	I/O	Resume	3.3V	Native	**PCH_SMBALERT#**
GPIO[12]	I/O	Resume	3.3V	Native	**LAN_DISABLE#**
GPIO[13]	I/O	Resume	3.3V	GPI	**INT_USB_P151_DET#**
GPIO[14]	I/O	Resume	3.3V	Native	**GPIO14**
GPIO[15]	I/O	Resume	3.3V	GPO	**PCH_GPIO15**
GPIO[16]	I/O	Main	3.3V	GPI	**PCH_GPIO16**
GPIO[17]	I/O	Main	3.3V	GPI	**PCH_GPIO17**
GPIO[18]	I/O	Main	3.3V	Native	**PCH_GPIO18**
GPIO[19]	I/O	Main	3.3V	GPI	**PCH_GPIO19**
GPIO[20]	I/O	Main	3.3V	Native	**PCIECLKREQ2#**
GPIO[21]	I/O	Main	3.3V	GPI	**FRONT_AUD_DET#**
GPIO[22]	I/O	Main	3.3V	GPI	**INT_USB_P150_DET#**
GPIO[23]	I/O	Main	3.3V	Native	LDRQ1#
GPIO[24]	I/O	Resume	3.3V	GPO	**PCH_GPIO24**
GPIO[25]	I/O	Resume	3.3V	Native	**BRD_ID2**
GPIO[26]	I/O	Resume	3.3V	Native	**PCH_GPIO26**
GPIO[27]	I/O	DSW	3.3V	GPI	**PCH_LAN_WAKE#**
GPIO[28]	I/O	Resume	3.3V	GPO	**PCH_GPIO28**
GPIO[29]	I/O	Resume	3.3V	Native	**SLP_WLAN#**
GPIO[30]	I/O	Resume	3.3V	GPI	**PCH_SUSWARN#**
GPIO[31]	I/O	DSW	3.3V	GPI	**PCH_GPIO31**
GPIO[32]	I/O	Main	3.3V	GPO	**PCH_GPIO32**
GPIO[33]	I/O	Main	3.3V	GPO	**PCH_GPIO33**
GPIO[34]	I/O	Main	3.3V	GPI	**PCH_GPIO34**
GPIO[35]	I/O	Main	3.3V	GPO	**BRD_REV0**
GPIO[36]	I/O	Main	3.3V	GPI	**PCH_GPIO36**

HP Restricted Secret

HEWLETT PACKARD

HP RESTRICTED

THIS DOCUMENET CONTAINS CONFIDENTIAL PROPRIETARY INFORMATION THAT IS HEWLETT-PACKARD (HP). DO NOT DISCLOSE TO OR DUPLICATE OTHERS EXCEPT AS AUTHORIZED BY HP.

DRAWN BY MICRO-STAR INT'L CO.,LTD

Title: GPIO Table1

Size: Custom | Document Number: HP SCH P/N:803190-000(MSI MS-G013) | Rev: A

Date: Thursday, January 17, 2019 | Sheet 53 of 59

PCH

https://vinafix.com

GPIO	I/O/NC	Power	Tol	Default	MB Function
GPIO[37]	I/O	Main	3.3V	GPI	PCH_GPIO37
GPIO[38]	I/O	Main	3.3V	GPI	**CHASSIS_ID0**
GPIO[39]	I/O	Main	3.3V	GPI	**BRD_ID1**
GPIO[40]	I/O	Resume	3.3V	Native	**USB_OCP#1**
GPIO[41]	I/O	Resume	3.3V	Native	**USB_OCP#2**
GPIO[42]	I/O	Resume	3.3V	Native	**USB_OCP#3**
GPIO[43]	I/O	Resume	3.3V	Native	**USB_OCP#4**
GPIO[44]	I/O	Resume	3.3V	Native	**PCIECLKREQ5#**
GPIO[45]	I/O	Resume	3.3V	Native	**PCH_GPIO45**
GPIO[46]	I/O	Resume	3.3V	Native	**PCH_GPIO46**
GPIO[48]	I/O	Main	3.3V	GPI	**CHASSIS_ID1**
GPIO[49]	I/O	Main	3.3V	GPI	**PCH_GPIO49**
GPIO[50]	I/O	Main	3.3V	GPI	**PCH_GPIO50**
GPIO[51]	I/O	Main	3.3V	GPO	**PCH_GPIO51**
GPIO[52]	I/O	Main	3.3V	GPI	**PCH_GPIO52**
GPIO[53]	I/O	Main	3.3V	GPO	**PCH_GPIO53**
GPIO[54]	I/O	Main	3.3V	GPI	**BOOT_BLK_EN#**
GPIO[55]	I/O	Main	3.3V	GPO	**PCH_GPIO55**
GPIO[57]	I/O	Resume	3.3V	GPI	**PCH_GPIO57**
GPIO[58]	I/O	Resume	3.3V	Native	**SML1CLK**
GPIO[59]	I/O	Resume	3.3V	Native	**USB_OCP#0**
GPIO[60]	I/O	Resume	3.3V	Native	**PCH_SML0ALERT#**
GPIO[61]	I/O	Resume	3.3V	Native	**PRNTER_DET#**
GPIO[62]	I/O	Resume	3.3V	Native	**SUS_CLK**
GPIO[63]	I/O	Resume	3.3V	Native	**SLP_S5#**
GPIO[64]	I/O	CORE	3.3V	Native	**CLKOUTFLEX0**
GPIO[65]	I/O	CORE	3.3V	Native	**CLKOUTFLEX1**
GPIO[66]	I/O	CORE	3.3V	Native	**CLKOUTFLEX2**
GPIO[67]	I/O	CORE	3.3V	Native	**CLKOUTFLEX3**
GPIO[68]	I/O	CORE	3.3V	GPI	**FRONT_USB_P26_DET#**
GPIO[69]	I/O	CORE	3.3V	GPI	**COMM_B_DET#**
GPIO[70]	I/O	CORE	3.3V	GPI	**BOOT_BLK_REC#**
GPIO[71]	I/O	CORE	3.3V	GPI	BRD_ID0
GPIO[72]	I/O	DSW	3.3V	Native	PCH_GPIO72
GPIO[73]	I/O	Resume	3.3V	Native	**BRD_REV1**
GPIO[74]	I/O	Resume	3.3V	Native	**PCH_SML1ALERT#**
GPIO[75]	I/O	Resume	3.3V	Native	**SML1DATA**

HP Restricted Secret

HEWLETT PACKARD

HP RESTRICTED

THIS DOCUMENET CONTAINS CONFIDENTIAL PROPRIETARY INFORMATION THAT IS HEWLETT-PACKARD (HP). DO NOT DISCLOSE TO OR DUPLICATE OTHERS EXCEPT AS AUTHORIZED BY HP.

DRAWN BY: MICRO-STAR INT'L CO.,LTD

Title: **GPIO Table2**

Size: Custom | Document Number: HP SCH P/N:803190-000(MSI MS-G013) | Rev: A

Date: Thursday, January 17, 2019 | Sheet 54 of 59

https://vinafix.com

Pin	Default Function / Alternate Functions	Buffer Type	Buffer Power Wells	Motherboard Function
1	CLAMP_CTRL	OD_8	VSB3	BLEED OFF CIRCUIT
2	SLP_S4#	IN_{TS4}	VSB3	SLP_S4#
3	SLP_S5#	IN_{TS4}	VSB3	SLP_S5#
4	SLP_S3#	IN_{TS4}	VSB3	SLP_S3#
5	SIOPME#	$OD_8/O_{4/8}$	VSB3	RI#
6	RSMRST#	$O_{3/6}$	VSB3	RSMRST#
7	PME_IN#	IN_{TS}	VSB3	PME status
8	BLINK_GR	$O_{20/20}$	VSB3	Power LED driver
9	COLOR	$O_{20/20}$	VSB3	Power LED driver
10	VSS	I	GND	GND
11	PWRGD_OUT	OD_6	VSB3	PWRGD_140ms
12	PS_ON#	OD_6	VSB3	PS_ON#
13	TACH1	IN_{TS}	VDD3	SYS_FAN_TACH
14	CLOCKI32	IN_{TS}	VSB3	SUS_CLK_IO
15	3V_AUX_SLOT_ON	$O_{4/8}$	VSB3	3V_AUX_SLOT_ON
16	VSB3	I	PWR	VSB3
17	VCORF	I	N/A	VCORF
18	LDRQ#	O_{PCI}	VDD3	LDRQ#
19	LAD3	IN_{PCI}/O_{PCI}	VDD3	LAD3
20	LAD0	IN_{PCI}/O_{PCI}	VDD3	LAD0
21	LAD2	IN_{PCI}/O_{PCI}	VDD3	LAD2
22	VSS	I	PWR	GND
23	LAD1	IN_{PCI}/O_{PCI}	VDD3	LAD1
24	SER_IRQ	IN_{PCI}/O_{PCI}	VDD3	SERIRQ
25	PCI_RESET#	IN_{PCI}	VDD3	PLTRST#
26	PCI_CLK	IN_{PCI}	VDD3	33MHz
27	LFRANE#	IN_{PCI}	VDD3	LFRANE#
28	VSB3	I	PWR	VSB3
29	GPRST3#	O_{14}	VSB3	PCIE_X16 RESET#
30	INTRUDER#	IN_{TS}	V_{BAT}	HOOD_SENSE#
31	5V_USB_CTRL	$O_{4/8}$	VSB3	5V_USB_EN
32	HDLOCK#	OD_{12}	VDD3	HOOD_LOCK#
33	GPIO01	$IN_{TS4}/OD_8/O_{4/8}$	VSB3	
34	HDUNLOCK#	OD_{12}	VDD3	HOOD_UNLOCK#
35	HD_LED_IN#	IN_{TS}	VDD3	Hard Drive LED Input
36	CPU_PRSNT1#	IN_{TSL}	V_{BAT}	CPU detection
37	VBAT	I	PWR	
38	12V_VSB_COMP	IN_{COMP2}	VSB3	
39	COMP_IN3	IN_{COMP3}	VSB3	
40	COMP_IN1	IN_{COMP1}	VSB3	5V voltage monitor
41	COMP_IN2	IN_{COMP2}	VSB3	12V voltage monitor
42	AVCC	I	PWR	AVCC
43	AD1	IN_{PCI}/O_{PCI}	VDD3	AD1
44	AD2	IN_{PCI}/O_{PCI}	VDD3	AD2
45	AD3	IN_{PCI}/O_{PCI}	VDD3	AD3
46	FSPI_STR	IN_{TS}	AVCC	FSPI_STR
47	AGND	I	GND	AGND
48	PWBTOUT#	IN_{TS4}	VLPS	PWBTOUT#
49	PWBTIN#	IN_{TS4}	VLPS	PWBTIN#
50	LPS_WAKE	IN_{TS}	VLPS	LPS_WAKE
51	LPS_PHY#	$O_{4/8}$	VLPS	LPS_PHY#
52	LPS_ON#	$O_{4/8}$	VLPS	LPS_ON#
53	VLPS	I	PWR	VLPS
54	VTT	I	PWR	VTT
55	THERMTRIP#	IN_{AGTL}	VTT	THERMTRIP#
56	TSI_SCL	IN_{TSI}/O_{TSI}	VTT	TSI_SCL
57	PROCHOT1#	IN_{AGTL}/OD_{AGTL24}	VTT	PROCHOT1#
58	PECI	IN_{PECI}/O_{PECI}	VTT	PECI
59	PROCHOT2#	IN_{AGTL}/OD_{AGTL24}	VTT	PROCHOT2#
60	VSS	I	PWR	GND
61	PWM2	$OD_{12}/O_{5/12}$	VDD3	SYS-FANPWM_REAR
62	HMSCL	IN_{SMI}/OD_5	VSB3	HMSCL
63	PWM1	$OD_{12}/O_{5/12}$	VDD3	SYS-FANPWM_FRONT
64	HMSDA	IN_{SMI}/OD_5	VSB3	HMSDA
65	HD_LED_OUT	OD_{16}	VSB3	Hard Drive LED Output
66	WAKE_OUT#	$OD_{12}/O_{5/12}$	VSB3	Wake Disable Output
67	GPIO15(EV6#)	IN_{TS}	VSB3	PCI_Express_Wake#
68	AMP_ON	$O_{4/8}$	VSB3	AMP_ON
69	AMP_ON#	$O_{4/8}$	VSB3	AMP_ON#
70	GPRST2#	$O_{14/14}$	VSB3	PE_RST#_OUT
71	12V_PG_25MS	OD_6	VSB3	12V_PG_25MS
72	KBDRST#	IN_{TS}/OD_{14}	VDD3	KBDRST#
73	AUDIO_BEEP	$O_{4/8}$	VSB3	DIAG Beep
74	TACH2	IN_{TS}	VDD3	TACH2
75	VSB3	I	PWR	VSB3
76	KBDAT	IN_{TS}/OD_{14}	VDD3	KBDAT
77	MDAT	IN_{TS}/OD_{14}	VDD3	MSDATA
78	SLIN_ASTRB#	$OD_{14}/O_{14/14}$	VDD3	RSLIN#
79	KBCLK	IN_{TS}/OD_{14}	VDD3	KBCLK
80	MCLK	IN_{TS}/OD_{14}	VDD3	MCLK
81	PD3	$IN_T/O_{14/14}$	VDD3	PD3
82	PD4	$IN_T/O_{14/14}$	VDD3	PD4
83	INIT#	$OD_{14}/O_{14/14}$	VDD3	INIT#
84	VSS	I	PWR	GND
85	PD1	$IN_T/O_{14/14}$	VDD3	PD1
86	PD6	$IN_T/O_{14/14}$	VDD3	PD6
87	PD0	$IN_T/O_{14/14}$	VDD3	PD0
88	PD2	$IN_T/O_{14/14}$	VDD3	PD2
89	PD7	$IN_T/O_{14/14}$	VDD3	PD7
90	PD5	$IN_T/O_{14/14}$	VDD3	PD5
91	STB_WRITE#	$OD_{14}/O_{14/14}$	VDD3	RSTB#
92	ERR#	IN_T	VDD3	RERR#
93	VSB3	I	PWR	VSB3
94	AFD_DSTRB#	$OD_{14}/O_{14/14}$	VDD3	RAFD#
95	PE	IN_T	VDD3	RPE
96	GA20	$IN_T/O_{14/14}$	VDD3	GA20
97	ACK#	IN_T	VDD3	RACK#
98	SLCT	IN_T	VDD3	RSLCT
99	BUST_WAIT#	IN_T	VDD3	RBUSY
100	TACH3	INTS	VDD3	TACH3
101	SMB1SDA	SW_{SMI}	VDD3	SMB_DATA_MAIN
102	PWRGD_PS	IN_{TS4}	VSB3	PWROK_PS
103	SMB2SDA	SW_{SMI}	VDD3	SMB_DATA_RESUME
104	PWRGD_O2#	OD_5	VSB3	PWRGD_50MS#
105	PWM3#	$OD_{12}/O_{5/12}$	VDD3	PSU-FANPWM
106	5V_USB_MAIN#	OD_8	VSB3	5V_USB_MAIN#
107	PWRGD_O1	OD_6	VSB3	PWRGD_30MS
108	VSS	I	PWR	GND
109	SMB1SCL	SW_{SMI}	VDD3	SMB_CLK_MAIN
110	SMI#	OD_6	VDD3	IO_SMI#
111	SMB2SDL	SW_{SMI}	VDD3	SMB_CLK_RESUME
112	DSR1#	IN_{TS}	VDD3	DSRA#
113	RI1#	IN_{TS}	VDD3	RIA#
114	CTS1#	IN_{TS}	VDD3	CTSA#
115	DCD1#	IN_{TS}	VDD3	DCDA#
116	SIN1	IN_{TS}	VDD3	SINA
117	RTS1#	$O_{4/8}$	VDD3	RTSA#
118	DTR#_BOUT1	$O_{4/8}$	VDD3	DTRA#
119	SOUT1	$O_{4/8}$	VDD3	SOUTA
120	DCD2#	IN_{TS}	VDD3	DCDB#
121	SOUT2	$O_{4/8}$	VDD3	SOUTB
122	VSB3	I	PWR	VSB3
123	DTR#_BOUT2	$O_{4/8}$	VDD3	DTRB#
124	RI2#	IN_{TS}	VDD3	RIB#
125	RTS2#	$O_{4/8}$	VDD3	RTSB#
126	SIN2	IN_{TS}	VDD3	SINB
127	DSR2#	IN_{TS}	VDD3	DSRB#
128	CTS2#	IN_{TS}	VDD3	CTSB#

HP Restricted Secret

HEWLETT PACKARD

HP RESTRICTED

THIS DOCUMENET CONTAINS CONFIDENTIAL/PROPRIETARY INFORMATION THAT IS HEWLETT-PACKARD (HP). DO NOT DISCLOSE TO OR DUPLICATE OTHERS EXCEPT AS AUTHORIZED BY HP.

DRAWN BY: MICRO-STAR INT'L CO.,LTD

Title: **GPIO Table3**

Size: Custom | Document Number: HP SCH P/N:803190-000(MSI MS-G013) | Rev: A

Date: Thursday, January 17, 2019 | Sheet 55 of 59

Modena X1

SIO1092565 - [MODENA][X1][SCH] modify schematic by vendor review

https://vinafix.com

2014/10/28

PAGE 30: Add R421.(For HP suggestion)

PAGE 31: Add R455.(prevent power cross moat)

2014/10/30

PAGE 15: Delete TP53.

PAGE 17: C682 change to 10uF.

2014/10/31

PAGE 29:Install R618 for vendor suggestion.

2014/11/3

PAGE 43: delete C411 C416 C423 (Remove excess capacitance)

PAGE 45: delete C490 C493 C494 C527 C966 C298 C41 C666 C667 C676 C677 C965 (EMI cap)

2014/11/4

PAGE 14: Add R486(GPIO69 pull high)

PAGE 21: Add R881(NET DTRB# pull high)

PAGE 23: J64 reference change to J63.(follow PCA spec)

PAGE 30: R391 change to C345.(Vendor suggestion)

2014/11/5

PAGE 29: R458 75ohm change to 510ohm. (Vendor suggestion)

PAGE 45: Add C1044(cross Capacitance)

SIO1092613 - [MODENA][X1][BRD]modify layout by vendor review

SIO1092565 - [MODENA][X1][SCH] modify schematic by vendor review

PAGE 13: H81 spec not has USB12 & USB13,

PAGE 35: H81 spec not has USB12 & USB13,

NET SBD12+、SBD12- change to SBD10+、SBD10- /USBN12、USBP12 change to USBN10、USBP10.

NET SBD13+、SBD13- change to SBD11+、SBD11- /USBN13、USBP13 change to USBN11、USBP11.

SIO1092951 - [MODENA][X1][BRD] modify EMC suggest layout

2014/11/7

PAGE 47: change MTG1、MTG2 footprint for modify MASK.

SIO1093393 - [MODENA][X1[SCH]modify schematic the Modena PCA board ID is confirm that leverage Lancelot to "000"

2014/11/11

PAGE 14: install R637 R662
uninstall R651 R665 for board ID

PAGE 28: uninstall R618 for repeat put high cap.

2014/11/19

Disable parts : D01-5817S0A-P15 ,change to D01-5817S0A-D07.

PAGE 24: D13

PAGE 30: D34,D43

PAGE 43: D4

SIO1096121 - [MODENA][X1][BOM]modify audio bom to fix the no install cpu which the speaker no alarm sound.

2014/11/20

PAGE 30 : R379,R380 value 51K change to 10K.(for Vendor suggestion)

R392,R383 value 10K change to 20K..(for Vendor suggestion)

uninstall R980..(for Vendor suggestion)

HP Restricted Secret

HEWLETT PACKARD

HP RESTRICTED

THIS DOCUMENET CONTAINS CONFIDENTIAL PROPRIETARY INFORMATION THAT IS HEWLETT-PACKARD (HP). DO NOT DISCLOSE TO OR DUPLICATE OTHERS EXCEPT AS AUTHORIZED BY HP.

DRAWN BY MICRO-STAR INT'L CO.,LTD

Title: History

Size: Custom | Document Number: HP SCH P/N:803190-000(MSI MS-G013) | Rev: A

Date: Thursday, January 17, 2019 | Sheet 56 of 59

Modena X2

SIO1105607 - [MODENA][X2][BOM]power team suggest change bom

2014/12/08

https://vinafix.com

PAGE 39:CHOKE6 chenage to [illegible] for power solution.

PAGE 41:CHOKE1 chenage to L04-12A7761-L65 for power solution.

PAGE 43:CHOKE8 chenage to L04-2207391-L65 for power solution.

EC47,EC48 chenage to C94-1011651-N07 for power solution.

SIO1100009 - [MODENA][X2][SCH] Foxconn RJ45 EMI issue

2014/12/10

PAGE 29: J9 change to N58-22F0181-U30

PAGE 35: J9 change to N58-22F0181-U30

SIO1099250 - [Modena][[X2][SCH] Audio malfunction

2014/12/11

PAGE 30: install C343 (0 ohm)

SIO1101956 - [MODENA][X2][BOM]change crystal cap to meet vendor measure

2014/12/15

PAGE28: C942,C943 from 27p to 22p

SIO1092565 - [Modena][[X2][SCH]

2014/12/15

PAGE40: C42 from 680 pf to 1000pf.

C8 from 1 uf to 0.22 uf.

R21 from 453 ohm to 475 ohm.

R91 from 113K ohm to 118K ohm.

PAGE43: uninstall C415 for power suggestion.

C334 from 1 uf 0402 to 10 uf 0603.

SIO1103165 - [MODENA][X2][BRD]Change fansink mounting hole.

2014/12/16

PAGE3~PAGE8: XU1 change to footprint for change fansink mounting hole.

SIO1103322 - [MODENA][X2][SCH]the usb power can't bleed off

2014/12/18

PAGE32: Add R1028,R1029,R1030 for bleed off circuit of USB power .

PAGE33: Add R1031,R1032 for bleed off circuit of USB power .

SIO1125283 - [MODENA][X1][BOM]Change the board revision EVT to DVT.

2014/12/19

PAGE14: install R656,uninstall R629 for EVT to DVT.

SIO1102245

PAGE19: Add R450 for RIB# pull high.

SIO1104048

2014/12/22

PAGE23: install C116 for DP power test.

SIO1125338

PAGE32: Add R445,R446,R447,R456,R457,R462,Q135,Q136 for USB leakage.

SIO1105609 - [Modena][[X2][SCH]

2014/12/24

PAGE32: EC45 change to C93-10116A1-N07 for replace shorter capacitance

---

SIO1105608 - [MODENA][X2][BOM]Audio vendor suggest

2014/12/26

PAGE30: delete D34 for audio vendor suggestion.

SIO1105969 - [MODENA][X2][BOM]Modify bom to meet d-sub sa measure

2015/01/05

PAGE24: C247,C285,C287 change to 4.7pF.

C289,C249,C254 change to 1pF.

HP Restricted Secret

HEWLETT PACKARD

HP RESTRICTED

THIS DOCUMENT CONTAINS CONFIDENTIAL PROPRIETARY INFORMATION
THAT IS HEWLETT-PACKARD (HP). DO NOT DISCLOSE TO OR DUPLICATE OTHERS
EXCEPT AS AUTHORIZED BY HP.

DRAWN BY: MICRO-STAR INT'L CO.,LTD

Title: History

Size	Document Number	Rev
Custom	HP SCH P/N:803190-000(MSI MS-G013)	A

Date: Thursday, January 17, 2019 Sheet 57 of 59

Modena X3

https://vinafix.com

2015/01/27

PAGE43 : delete EC43. Due to the hard disk at the bottom of the BIOS, SW50 moved EC43 position.(SIO1122428)

2015/02/12

Page 28: Add R905 (uninstall) R497 (install) for LED can't off when we select lan to hidden in the bios setup. (SIO1122504)

PAGE 28: EC39 change PN to C94-1011691-N07 for Improve life cycle.(SIO1122461)

PAGE 30: add C707(uninstall) for AZ_SDIN0 reserved cap.(SIO1122521)

PAGE 32: EC25,EC26,EC29 change to C94-47110G1-SO8(C_P3_5_D8_H11_5) for Improve life cycle.(SIO1122436)

PAGE 36: change P26 PN from N32-2101181-H06 to N32-2101211-H06 for cable too loose.(SIO1122548)

PAGE 40: change C17 from 22pF to 10pF for power suggestion.(SIO1122530)

PAGE 41: install C37 for power suggestion.(SIO1122468)

PAGE 41: install C65,uninstall C31 for power suggestion.(SIO1122446)

2015/02/17

Page 43: change U36 from I31-5611C09-A30 to I31-0115P09-U33 for power suggestion.(SIO1125419)

2015/02/25

Page 14: uninstall R656,R632,install R653,R629 for Change the board revision SI1 to PV(SIO1125697)

Page 37: uninstall E14 JP14 for remove BB function (SIO1125746)

2015/03/04

Page 24: Patch the system will auto power on when system is shutdown R724 from 100K change to 1K for PCH_LAN_WAKE# issue(SIO1125775)

Page 25: delete U9 RN6 R265 Q13 EC32 C292 for remove +3.3V_SLOT power circuit and instead of +3.3V_AUX(SIO1113861)

HP Restricted Secret

HEWLETT PACKARD

HP RESTRICTED

THIS DOCUMENET CONTAINS CONFIDENTIAL PROPRIETARY INFORMATION THAT IS HEWLETT-PACKARD (HP). DO NOT DISCLOSE TO OR DUPLICATE OTHERS EXCEPT AS AUTHORIZED BY HP.

DRAWN BY MICRO-STAR INT'L CO.,LTD

Title: History

Size: Custom | Document Number: HP SCH P/N:803190-000(MSI MS-G013) | Rev: A

Date: Thursday, January 17, 2019 | Sheet 58 of 59

Modena 10

https://vinafix.com

2015/04/13 for PV change MP(remove proto part) (SIO1143816)

PAGE21: uninstall E17

PAGE27: uninstall CR10,CR11,CR2,CR3,CR4,CR5,CR6,CR7,CR8,CR9,Q137,Q138,Q139,Q142,Q143,Q148,Q149,Q140,Q141,Q144,Q145,
R376,R377,R785,R790,R793,R795,R798,R799,R800,R801,R802,R454,XU19

PAGE37: uninstall XU19,E15,E16,JP16.U19 ASM COMM:6010 change to 5010.

PAGE44: uninstall E18

PAGE28: uninstall Q71,R497,C354.install R905 for the system can't wake on lan when AC power loss.(SIO1140929)

PAGE37: install R332

2015/04/16 for change board reversion id from PV to MVB(SIO1147702)

PAGE14: install R632,uninstall R629 for brd id.

2015/04/27

PAGE28: install R917,uninstall R919 for system can't wake on lan when AC power loss at S0.(SIO1142170)

HP Restricted Secret

HEWLETT PACKARD

HP RESTRICTED
THIS DOCUMENET CONTAINS CONFIDENTIAL PROPRIETARY INFORMATION THAT IS HEWLETT-PACKARD (HP). DO NOT DISCLOSE TO OR DUPLICATE OTHERS EXCEPT AS AUTHORIZED BY HP.

DRAWN BY MICRO-STAR INT'L CO.,LTD

Title: History

Size: Custom | Document Number: HP SCH P/N:803190-000(MSI MS-G013) | Rev: A

Date: Thursday, January 17, 2019 | Sheet 59 of 59