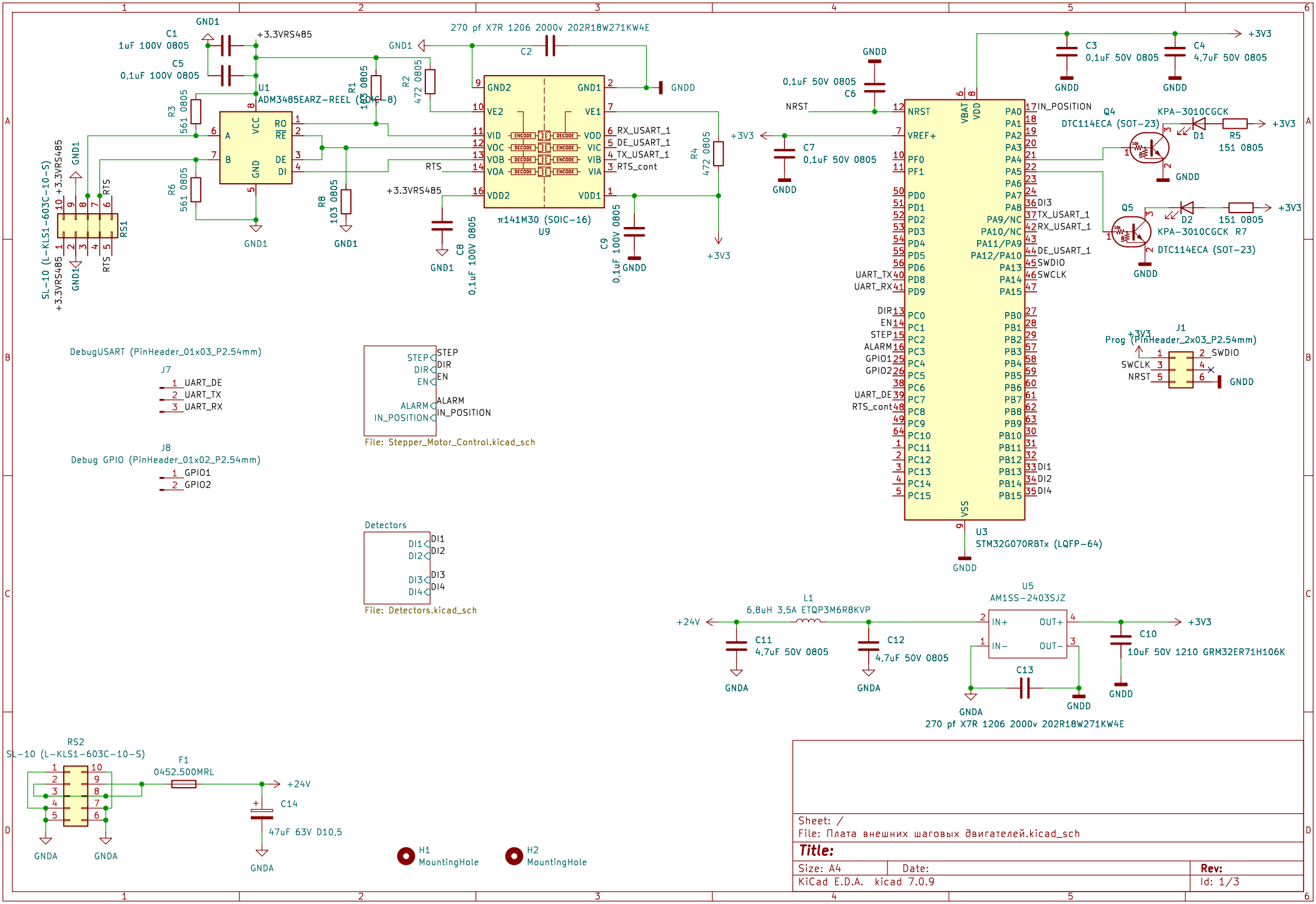
C1
1uF 100V 0805
C5
0,1uF 100V 0805
GND1
+3.3VRS485
U1
ADM3485EARZ-REEL (SOIC-8)
R3
561 0805
R6
561 0805
R1
180 0805
R2
472 0805
R8
103 0805
RS1
SL-10 (L-KLS1-603C-10-S)
270 pf X7R 1206 2000v 202R18W271KW4E
C2
GNDD
RX_USART_1
DE_USART_1
TX_USART_1
RTS_cont
RTS
C8
0,1uF 100V 0805
C9
0,1uF 100V 0805
π141M30 (SOIC-16)
U9
R4
472 0805
+3V3
C3
0,1uF 50V 0805
C4
4,7uF 50V 0805
C6
0,1uF 50V 0805
NRST
C7
0,1uF 50V 0805
IN_POSITION
Q4
DTC114ECA (SOT-23)
KPA-3010CGCK
D1
R5
151 0805
Q5
D2
151 0805
KPA-3010CGCK
R7
DTC114ECA (SOT-23)
DI3
TX_USART_1
RX_USART_1
DE_USART_1
SWDIO
SWCLK
UART_TX
UART_RX
DIR
EN
STEP
ALARM
GPIO1
GPIO2
UART_DE
RTS_cont
DI1
DI2
DI4
U3
STM32G070RBTx (LQFP-64)
J1
Prog (PinHeader_2x03_P2.54mm)
DebugUSART (PinHeader_01x03_P2.54mm)
J7
UART_DE
UART_TX
UART_RX
File: Stepper_Motor_Control.kicad_sch
J8
Debug GPIO (PinHeader_01x02_P2.54mm)
GPIO1
GPIO2
Detectors
File: Detectors.kicad_sch
+24V
L1
6,8uH 3,5A ETQP3M6R8KVP
C11
4,7uF 50V 0805
C12
4,7uF 50V 0805
GNDA
U5
AM1SS-2403SJZ
IN+
IN-
OUT+
OUT-
C13
270 pf X7R 1206 2000v 202R18W271KW4E
C10
10uF 50V 1210 GRM32ER71H106K
RS2
SL-10 (L-KLS1-603C-10-S)
F1
0452.500MRL
C14
47uF 63V D10,5
H1
MountingHole
H2
MountingHole
Sheet: /
File: Плата внешних шаговых двигателей.kicad_sch
Title:
Size: A4
Date:
Rev:
KiCad E.D.A. kicad 7.0.9
Id: 1/3

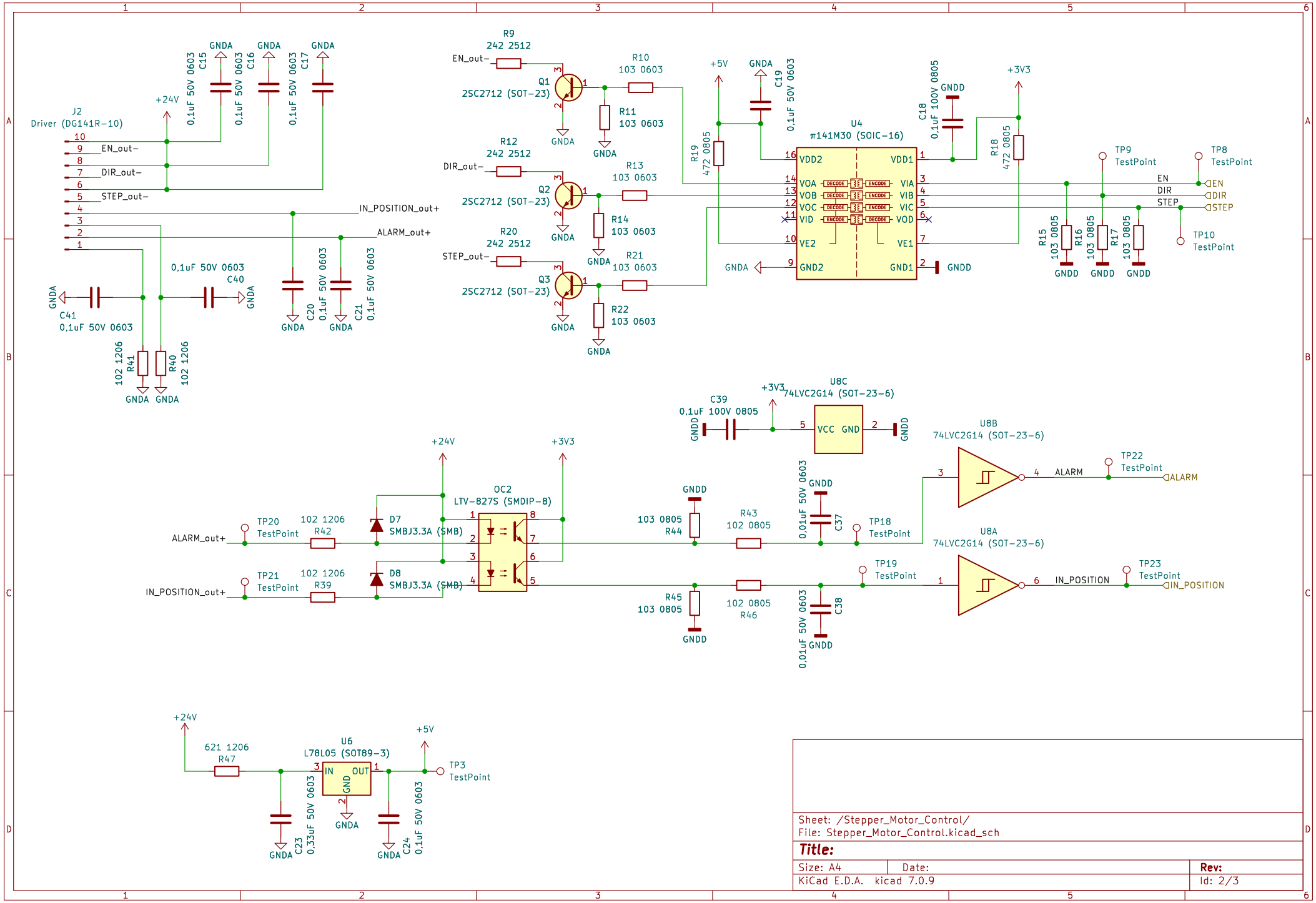

Sheet: /Stepper_Motor_Control/
File: Stepper_Motor_Control.kicad_sch

Title:

Size: A4	Date:	Rev:
KiCad E.D.A. kicad 7.0.9		Id: 2/3

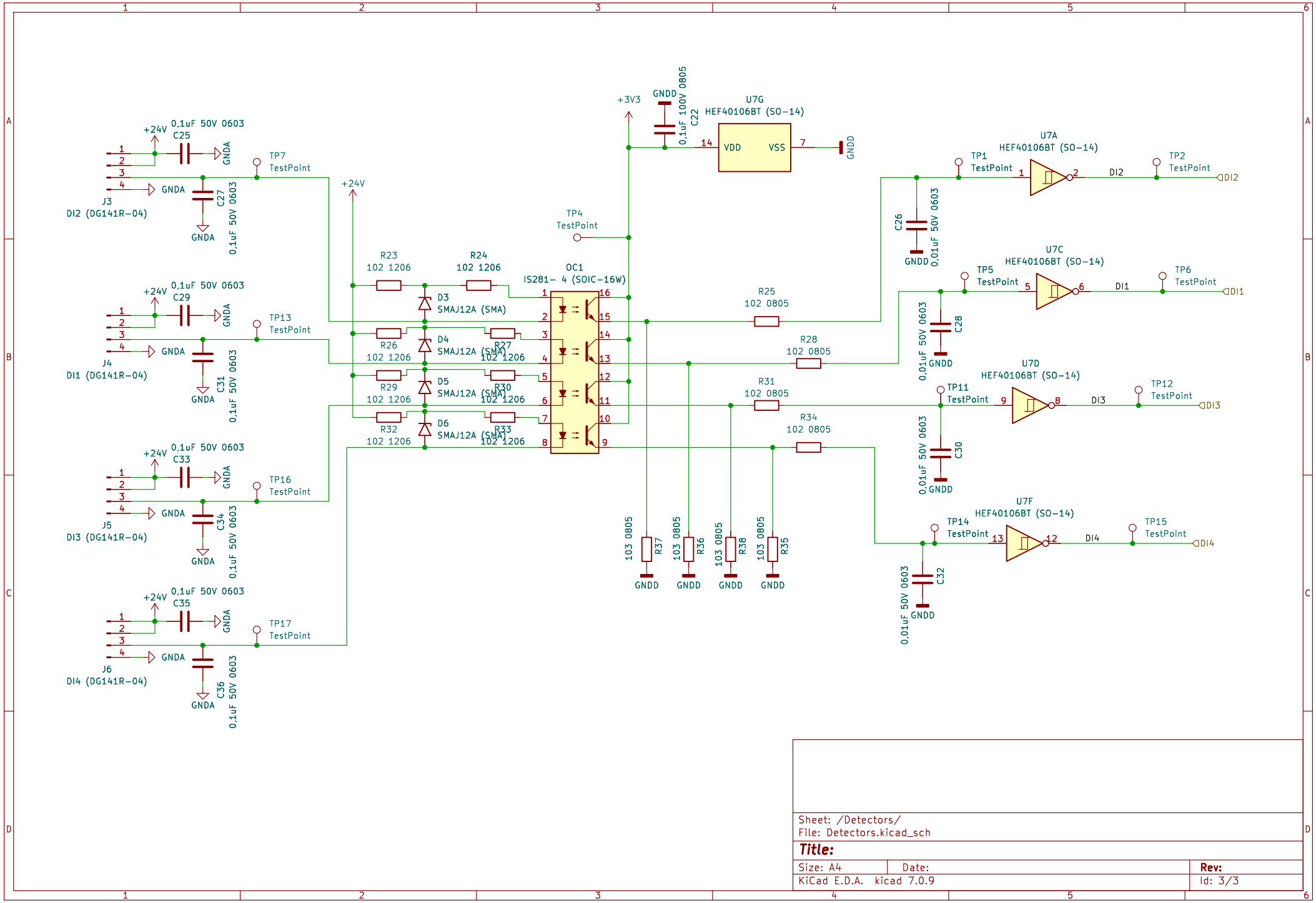

Sheet: /Detectors/
File: Detectors.kicad_sch

Title:

Size: A4	Date:	Rev:
KiCad E.D.A. kicad 7.0.9		Id: 3/3