Passive Drone Detection

CRITICAL DESIGN REVIEW (CDR)

Version 1.0.0

Saeed Alfalasi, Ally Allman, Emanuele Bossi, Duncan Martin, Hannah Gonzales, Sam Yorio

April 17, 2026

Agenda

01 INTRODUCTION / EXECUTIVE SUMMARY

02 SYSTEM HIGH-LEVEL OVERVIEW

03 DESIGN DECISIONS AND JUSTIFICATION

04 KEY REQUIREMENTS

05 COLLECTED DATA

06 TRACEABILITY AND TESTING

07 SCHEDULE

08 MOVING FORWARD

09 DOCUMENTATION

10 DEMO & POSTER DESIGN

The Team

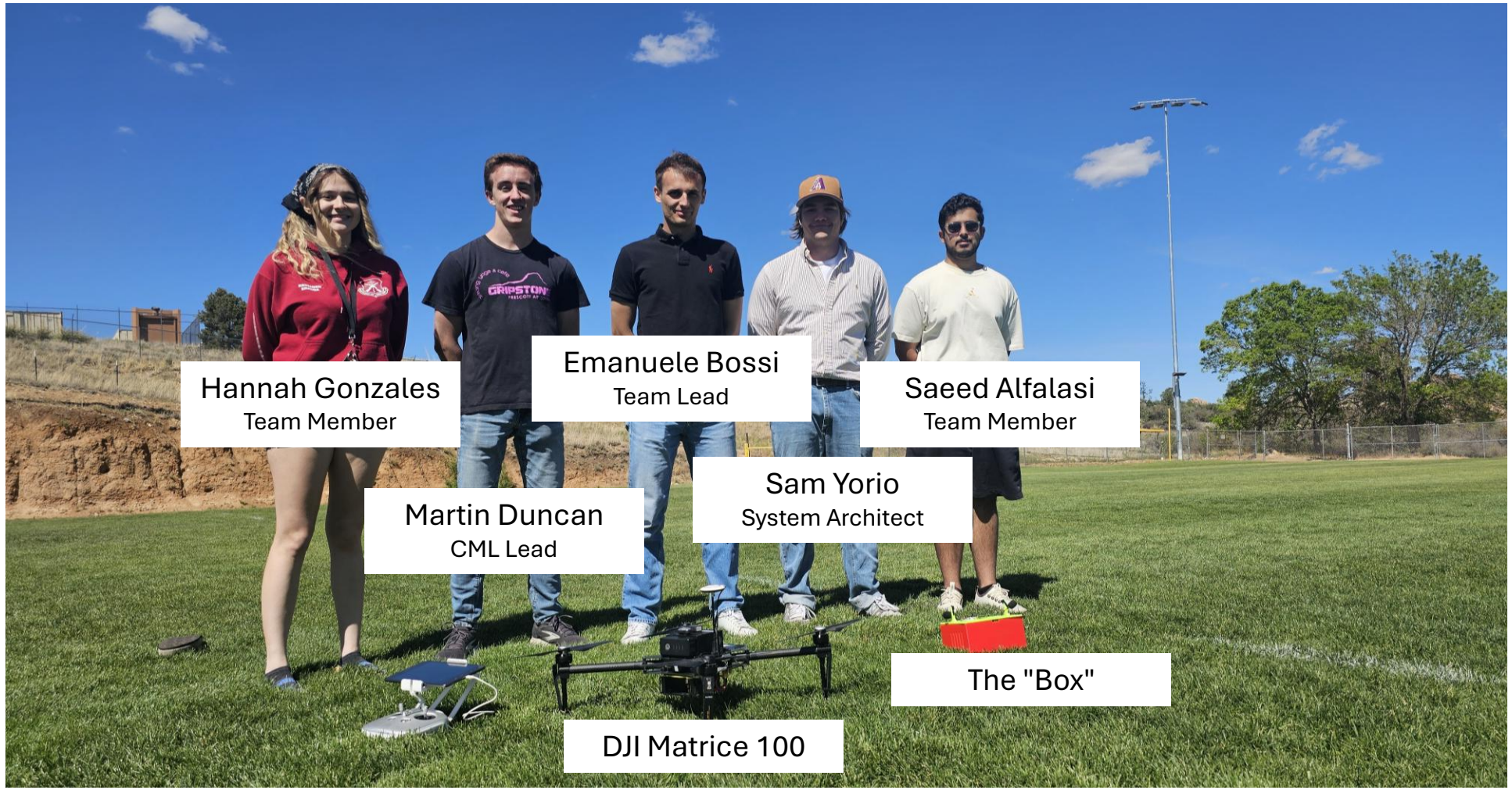
Hannah Gonzales
Team Member
Emanuele Bossi
Team Lead
Saeed Alfalasi
Team Member
Sam Yorio
System Architect
Martin Duncan
CML Lead
The "Box"
DJI Matrice 100

Introduction/Executive Summary

Objectives

OUR AIM

To develop a reliable, covert, and fully passive drone-detection capability that enhances situational awareness in sensitive environments without emitting any RF or revealing the presence of the system.

THE GOAL

To design, implement, and experimentally validate a first-generation passive detection “box” using an acoustic sensing pipeline, supported by real-time signal processing and a threshold-based detection algorithm capable of identifying Type-1 and Type-2 UAV[1] signatures under controlled field conditions.

[1]While the broad goal of the project is to identify Type-1 and Type-2 Military Drones, due to budget limitations and current availabilities, the project used a DJI Matrice 100 Drone for data collection and testing of the product developed.

Problem Statement

System High-Level Overview

Critical Requirements

Code	Description
FR1	The system shall detect the presence of a DJI Matrice 100 drone at a minimum distance of 50 meters.
FR3	The system shall classify detected activity as either a drone or a non-drone with at least 70% accuracy.
FR6	The system shall passively detect the presence of a DJI Matrice 100 drone in an unobstructed environment.

Block Diagram

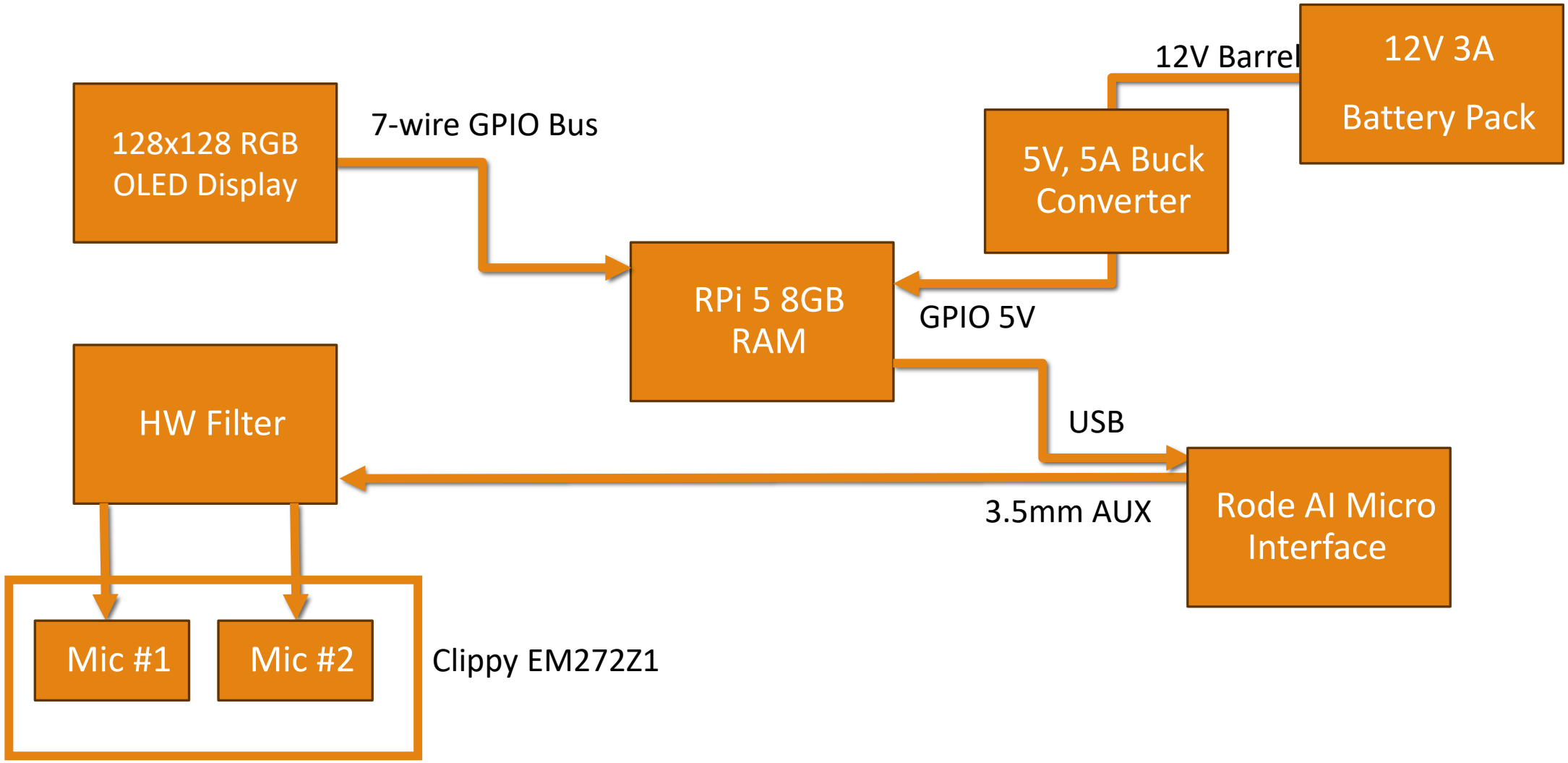

Filter Schematic

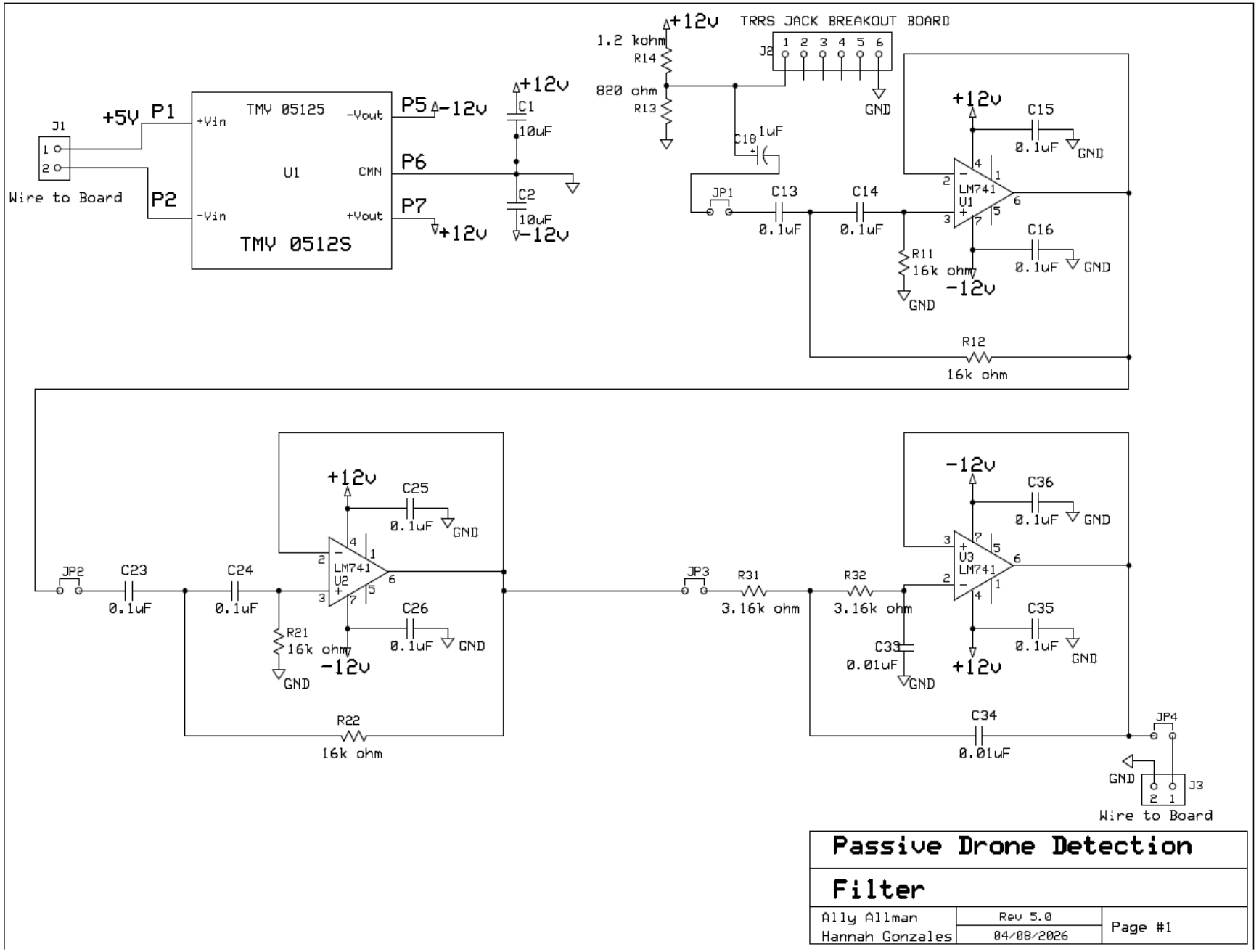

Software Architecture Overview

AUDIO INPUT
- Load .wav file
- Convert stereo → mono

PREPROCESSING
- High-pass filter (80 Hz)
- Frame segmentation (110 ms, 10 ms hop)

FEATURE EXTRACTION
- FFT-based power spectrum
- Extract drone & reference frequency bands

DETECTION
- Spectral ratio thresholds
- RMS energy gating
- Temporal smoothing

OUTPUT
- Binary detection signal
- Plots (time, spectrum, detection)

Enclosure

- Box
  - Dimensions:
    - 220mm x 150mm x 100mm
  - Ventilation slots for cooling
  - Internal compartment for battery placement
- Lid
  - Dimensions:
    - 220mm x 150mm x 54mm
  - Mounting posts for microphone positioning
  - Openings for wiring, connectors, and fasteners
- Supports portability and size constraints
- Designed for easy assembly and maintenance

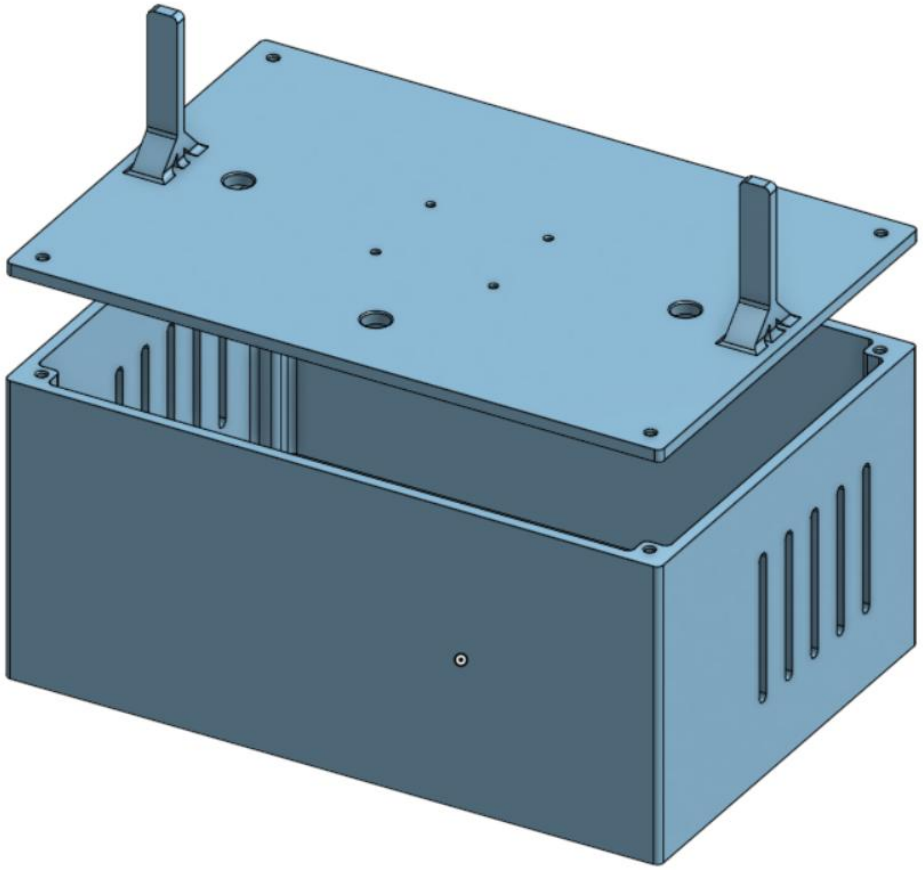

Design Decisions and Justifications

Design of Experiments

Acoustic:

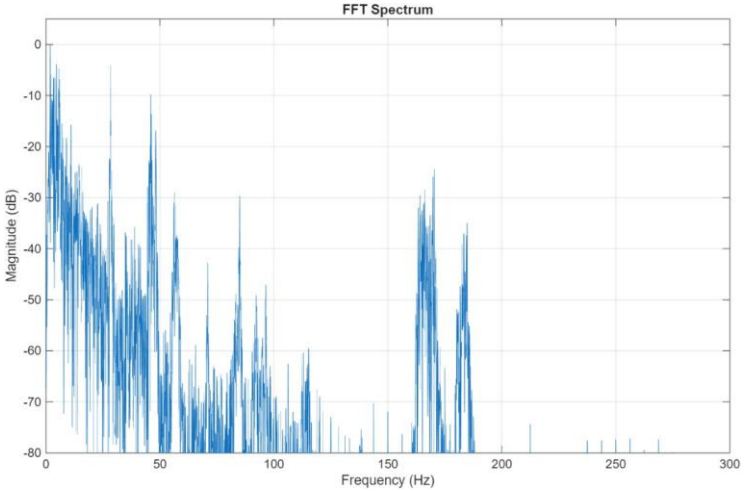

- 25m horizontal
- Best signal quality
- Lower noise impact

Radio Frequency:

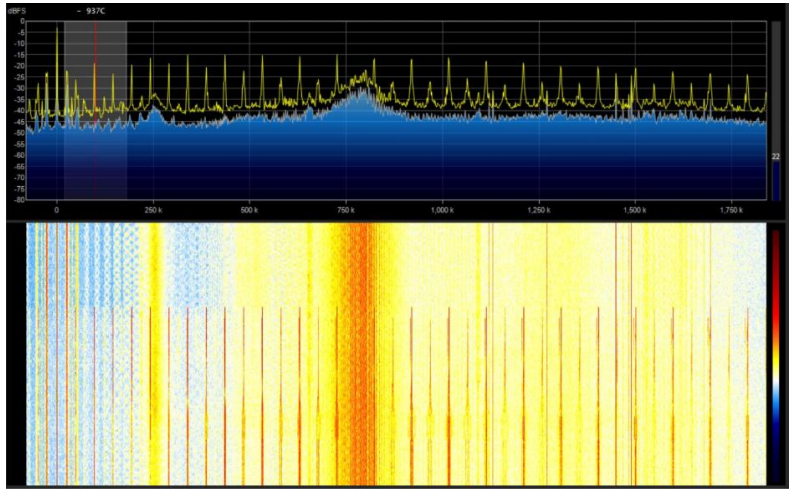

- 2ft horizontal
- Moderate signal quality
- Heavy Noise impact

Infrared:

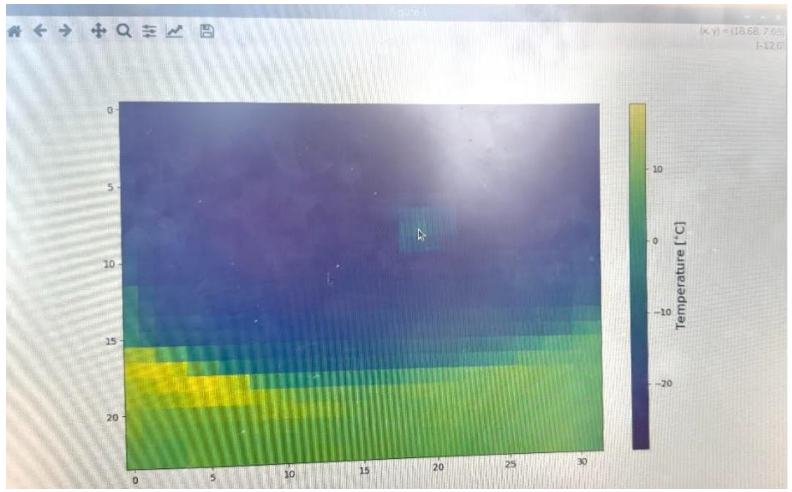

- 2.5m horizontal
- Bad signal quality
- Moderate noise impact

Design of Experiments

Detection Method	Range	Maximum Dimension of 50 cm	10kg max	Moving Forward
Acoustic	25m+	Yes	Yes	More filtering, amplification, testing required to increase range
IR	10m	Yes	Yes	Better thermal cameras are out of budget, narrow FOV in better cameras
RF	2m	No	Yes	A lot of extra testing needed with other and better equipment, no visible signatures over 2m

Acoustic Modality

- Acoustic sensing was selected following comparison with RF and IR methods
- Meets passive sensing requirement
- Demonstrated greater detection range than RF and IR in preliminary testing
- Lower cost compared to RF and IR

Threshold Detection

- Initial FFT analysis showed distinct spectral peak associated with drone operation
- Enables simple detection by monitoring frequency band energy
- Threshold based detection algorithm implemented
  - Distinction between drone signal and ambient
  - Effective with limited dataset
  - Tunable

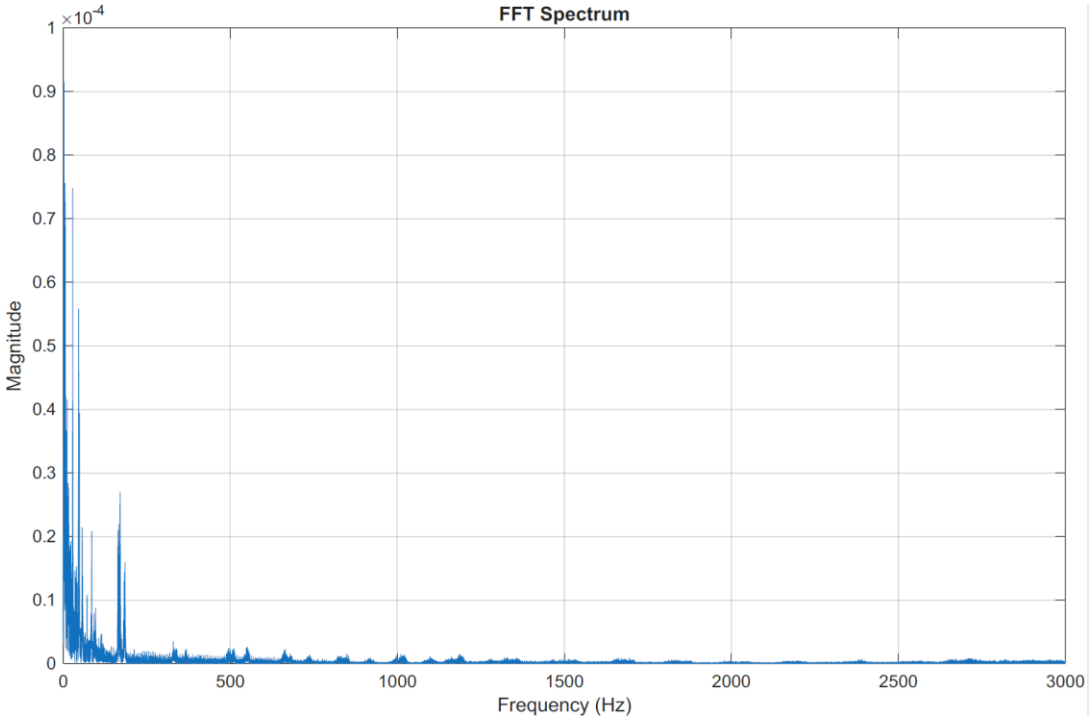

Hardware Selection

- Processing Unit – Raspberry Pi 5 (8 G)
  - Main processing for detection logic
  - Supports integration with USB audio, GPIO, and display
- Sensing Hardware – Clippy EM272Z1 Microphones
  - Selected for high sensitivity to low acoustic signals
- Signal Conditioning/Audio Interface
  - Hardware Filter
    - Removes low-frequency noise before processing
  - Rode AI Micro
    - Converts microphone signal into digital input for processing
- Power and User Interface
  - 12V, 3A Battery Pack
    - Supports portable operation and required runtime
  - 5V, 5A Buck Converter
    - Regulated voltage for Raspberry Pi
  - 128x128 RGB OLED Display
    - Displays system status and detection output

Filter BOM

Order Dates	Vendor Name	Part Number and/ or Description	Price Each	QTY	Extended Price	Item Total
26-Mar-26	Phoenix Contact	277-1273-ND	$ 1.93	10	$ 19.30	$ 19.30
26-Mar-26	Traco Power	1951-2700-ND	$ 6.01	5	$ 30.05	$ 30.05
26-Mar-26	Panasonic Electronic Components	P5578-ND	$ 0.31	10	$ 3.10	$ 3.10
26-Mar-26	Stackpole Electronics Inc	CF18JT820RTR-ND	$ 0.10	5	$ 0.50	$ 0.50
26-Mar-26	Stackpole Electronics Inc	CF14JT1K20TR-ND	$ 0.10	5	$ 0.50	$ 0.50
26-Mar-26	Stackpole Electronics Inc	CF12JT3K90TR-ND	$ 0.10	5	$ 0.50	$ 0.50
26-Mar-26	Würth Elektronik	732-8851-1-ND	$ 0.10	5	$ 0.50	$ 0.50
26-Mar-26	Adafruit Industries LLC	1528-5764-ND	$ 1.75	5	$ 8.75	$ 8.75
26-Mar-26	Sullins Connector Solutions	S9337-ND	$ 0.10	10	$ 1.00	$ 1.00
26-Mar-26	Samtec Inc.	SAM1112-32-ND	$ 3.61	5	$ 18.05	$ 18.05
26-Mar-26	KEMET	399-9684-ND	$ 0.27	20	$ 5.40	$ 5.40
26-Mar-26	Stackpole Electronics Inc	CF14JT16K0TR-ND	$ 0.10	20	$ 2.00	$ 2.00
26-Mar-26	KEMET	399-C0603C104K5RACTUTR-ND	$ 0.08	30	$ 2.40	$ 2.40
26-Mar-26	Texas Instruments	LM741CNNS/NOPB-ND	$ 1.03	15	$ 15.45	$ 15.45
26-Mar-26	Stackpole Electronics Inc	RNF14FTD3K16TR-ND	$ 0.10	10	$ 1.00	$ 1.00
26-Mar-26	KEMET	399-17246-ND	$ 0.58	10	$ 5.80	$ 5.80
						$ 114.30

Complete Hardware BOM

Final Capstone BOM								
Item No.	Item Name	Manufacturer	Description	Size	Cost Per Item	Qty.	Total Cost	Item Link
1	Rode AI-Micro	Rode	Audio Combining/AMP/ADC	40 x 11 x 38 mm	$ 67.77	1	$ 67.77	Amazon
2	12V 3A Rechargable Battery	Talentcell	Battery	132 x 43 x 25 mm	$ 22.99	1	$ 22.99	Amazon
3	RaspberryPi 5 8GB	Adafruit	SBC	85 x 56 x 16 mm	$ 92.00	1	$ 92.00	Amazon
4	1.5″ LCD Display	waveshare	Rpi Display	58 x 35 x 3 mm	$ 23.03	1	$ 23.03	Amazon
5	Clippy EM272Z1 Mic	Fel Comm	3.5mm aux microphone	25mm x 11mm ⌀	$ 48.00	2	$ 96.00	Micbooster
6	Pololu Buck Converter	Pololu	5v Voltage regulator	18 x 20 x 9 mm	$ 29.95	1	$ 29.95	Pololu
7	Foam Mic Covers	Styquenzer	Mic Wind Cover	25mm x 11mm ⌀	$ 4.49	1	$ 4.49	Amazon
8	Rpi Active Fan Cooler	Adafruit	Cooler for Rpi	22 x 32 x 9 mm	$ 9.89	1	$ 9.89	Amazon
9	Filter Componets	Varies	Parts for HW filter	varies	$ 114.30	1	$ 114.30	varies
10	3D printed PLA Box	ERAU	Enclousure for HW	220mm x 150mm x 54mm	$ 12.00	1	$ 12.00	-
					Subtotal:		$ 472.42	

Key Requirements

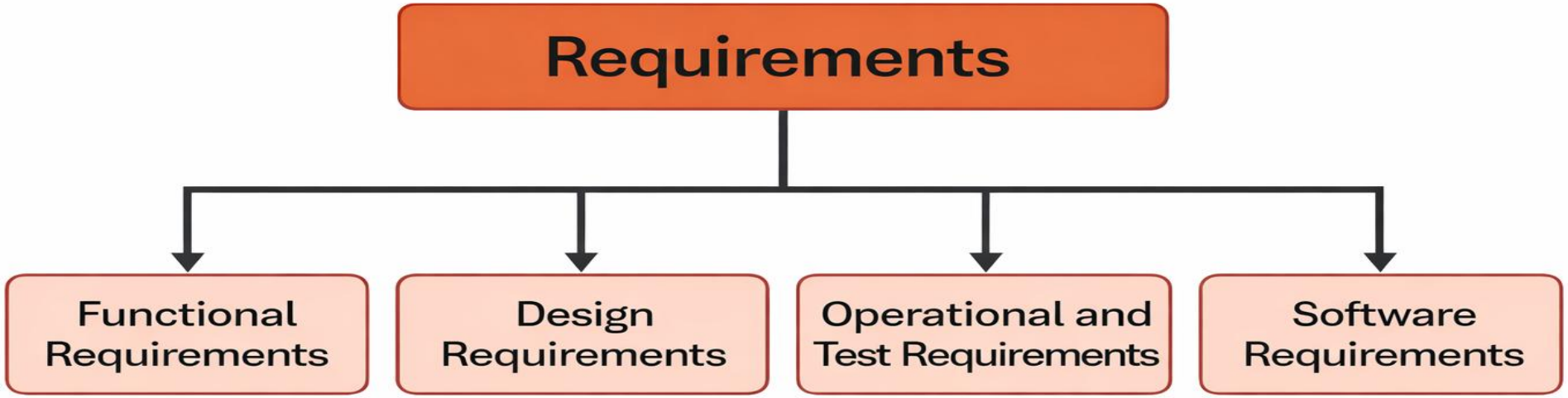
Requirements
Functional Requirements
Design Requirements
Operational and Test Requirements
Software Requirements

Functional Requirements

Code	Description
FR1	The system shall detect the presence of a DJI Matrice 100 drone at a minimum distance of 50 meters.
FR2	The system shall operate using passive sensing only.
FR3	The system shall classify detected activity as either a drone or a non-drone with at least 70% accuracy.
FR4	The system shall process sensor data and provide an output with a latency of less than 10 seconds from the time of detection.
FR5	The system shall passively detect the presence of a DJI Matrice 100 drone within a 120-degree visual window
FR6	The system shall passively detect the presence of a DJI Matrice 100 drone in an unobstructed environment.

Design Requirements

Code	Description
DR1	The system shall operate for a minimum of 1 hour on portable power (such as a battery)
DR2	The system shall use a removable and replaceable power source.
DR3	The system shall not exceed a maximum dimension of 50 centimeters in any direction.
DR4	The system shall weigh no more than 10 kilograms including the enclosure and battery.

Operational and Test Requirements

Code	Description
OR1	The system shall operate in outdoor conditions with ambient temperatures between 0°C and 40°C.

Code	Description
TR1	The system shall be tested in compliance with FAA regulations for outdoor drone operations.
TR2	The system shall be tested to determine the maximum range of detection in an outdoor environment.

Software Requirements

Code	Description
SR1	The software shall process incoming digital streams in real time with latency low enough to enable timely UAV detection and alerting (T≤ 1s).
SR2	The software shall compute relevant acoustic features (e.g., spectral energy bands, harmonic structure, temporal patterns) required for downstream detection and classification algorithms.
SR3	The software shall implement a detection algorithm capable of identifying UAV-like acoustic signatures under varying noise and environmental conditions.

Collected Data

Key Requirement #1 & #2

Code	Description
FR1	The system shall detect the presence of a DJI Matrice 100 drone at a minimum distance of 50 meters.
FR3	The system shall classify detected activity as either a drone or a non-drone with at least 70% accuracy.

Testing Procedure

Relevant Acoustic Features (SR2)

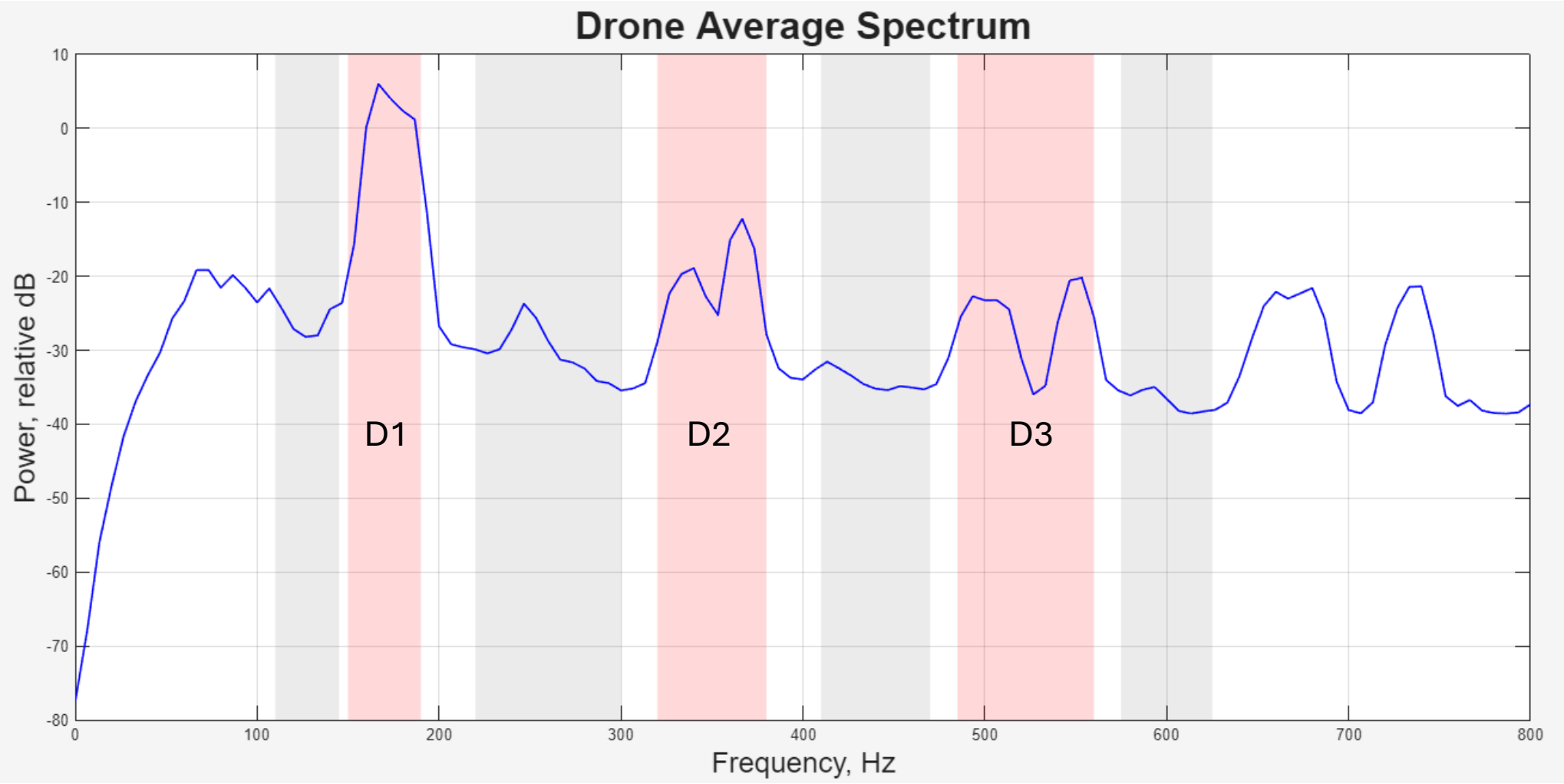

Relevant Acoustic Features (SR2)

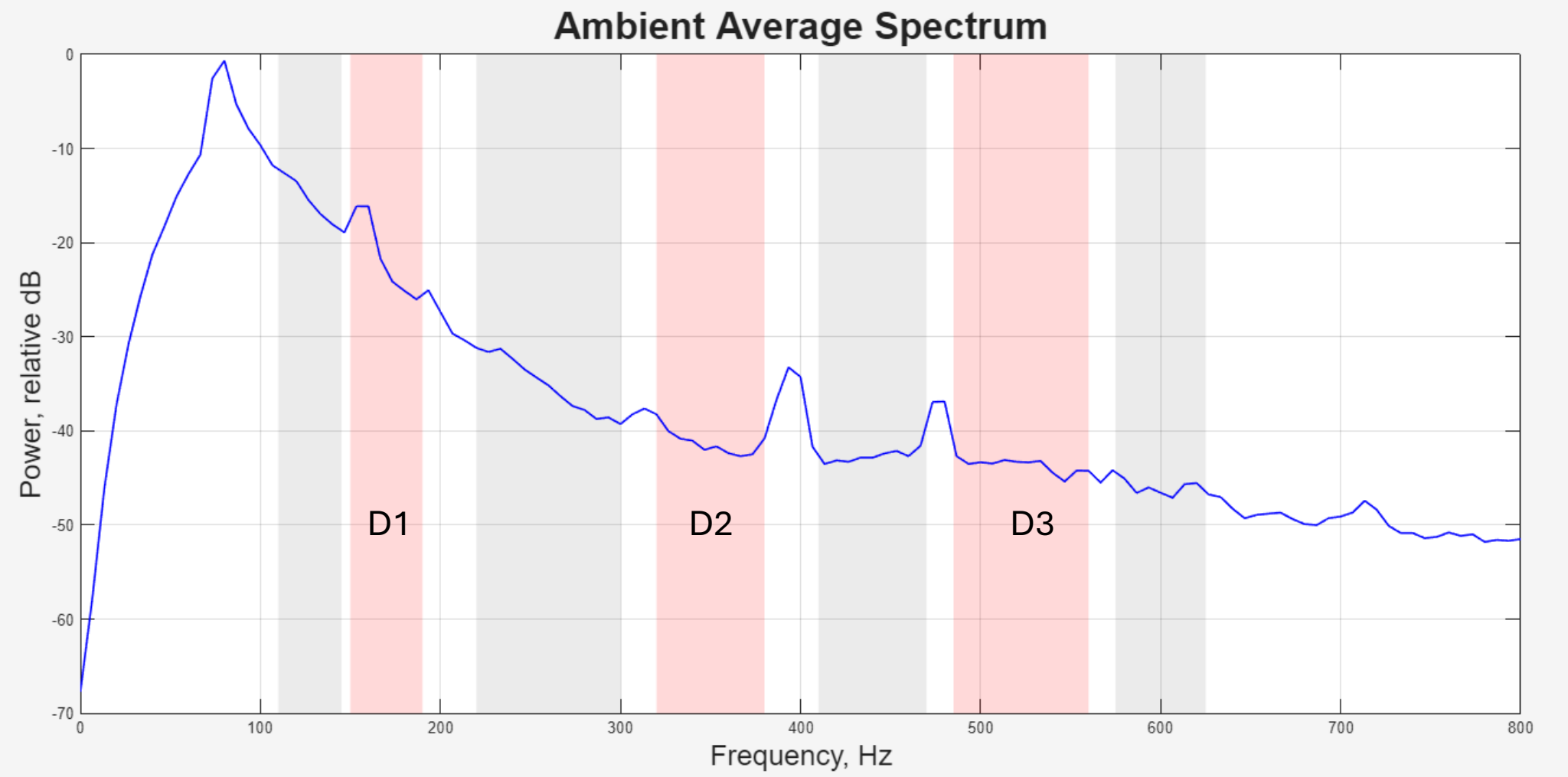

Detection Logic

Spectral Features:

$$P_{d,i} = \text{mean power in drone band } i$$

$$P_{r,i} = \text{mean power in reference bands}$$

$$R_i = 10 \log_{10}\left(\frac{P_{d,i}}{P_{r,i} + \epsilon}\right)$$

Energy Gate:

$$\mathrm{RMS}_{dB} = 20 \log_{10}\left(\sqrt{\frac{1}{N}\sum x^2}\right)$$

Thresholding:

$$d_i = (R_i \geq T_i), \quad d_4 = (\mathrm{RMS}_{dB} \geq T_4)$$

Detection Rule:

$$\text{Detection} = d_4 \ \wedge \ (d_1 \vee d_2 \vee d_3)$$

Each detector looks for the same energy pattern, but in different frequency bands where drone harmonics may appear.

Energy gate that ensures detections occur only when the signal is strong enough, preventing false alarms from noise

Testing Results of FR1 & FR3

$$\hat{y} = -1.64d + 104.5$$

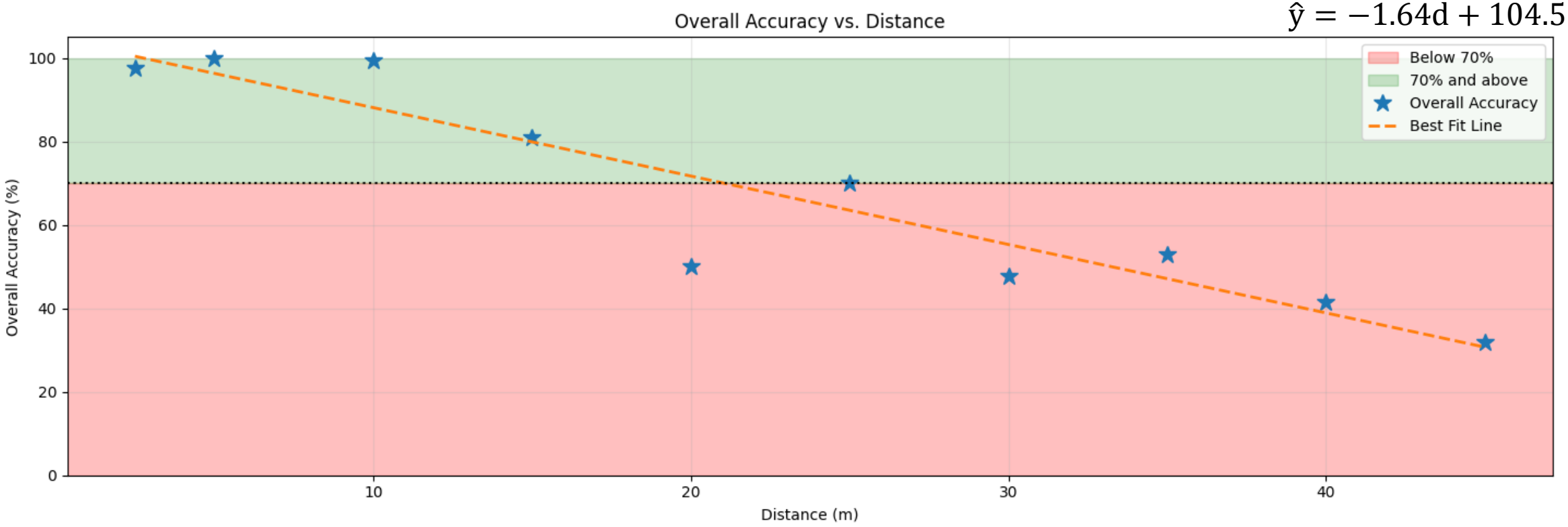

Justification of Data at d=20m

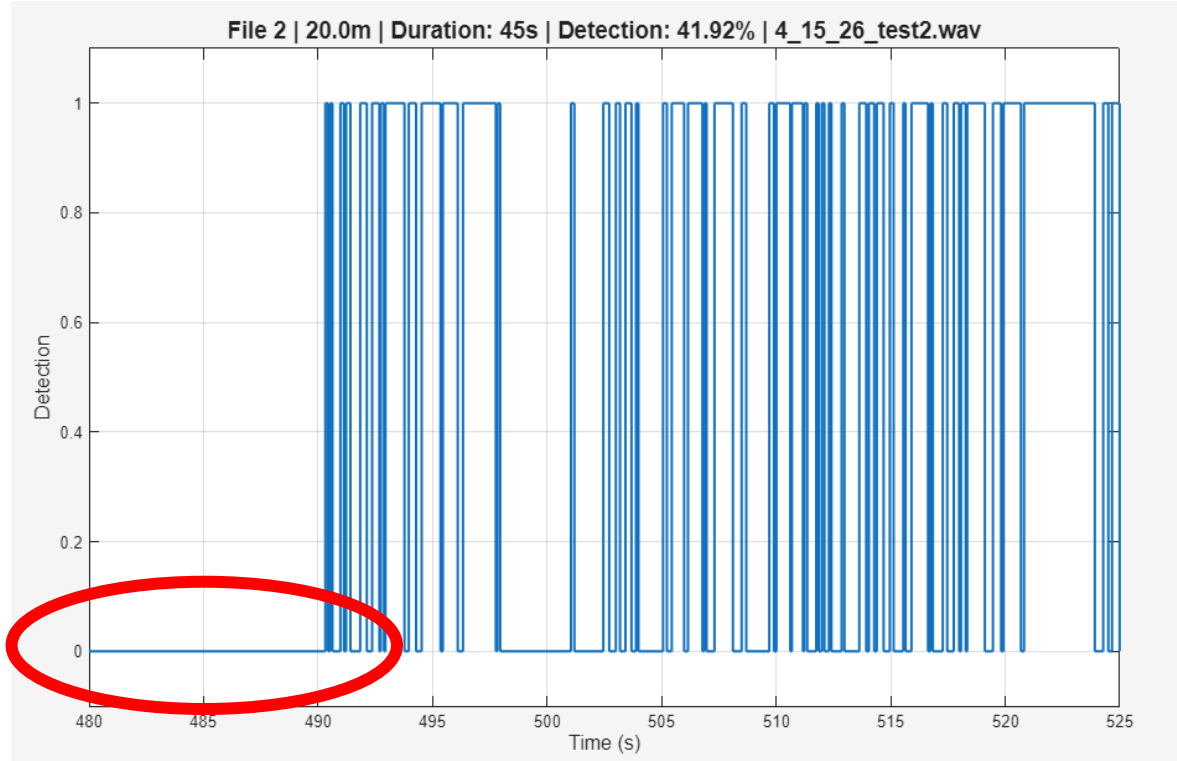

- $\hat{y}(20) \approx 71.7\%$
- $y(20) = 50.06\%$
- Standardized residual:
  - $r_i^* = \frac{|y_i - \hat{y}_i|}{\sigma_r} = \frac{21.65}{9.17} = 2.36$
- $r_i^* > 2$ → OUTLIER (Kim HY, 2019)

Restorative Dentistry & Endodontics RDE

Appendix 1. Procedure of residual analysis of simple linear regression (SLR) model using IBM SPSS

The residual analysis of SLR using IBM SPSS Statistics for Windows Version 23.0 (IBM Corp., Armonk, NY, USA) is performed during or after regression procedure appeared in the previous session [1].

- D-1: During regression procedure in SLR [1], residual plots against Ŷ (ZRESID*ZPRED) to check equal variance assumption and standardized residual plots (histogram and normal probability plot) to check normality assumption are requested.
- D-2: To save the predicted values and residual values (original & standardized). Standardized residual values larger than 2 in absolute scale can be used to identify outliers.
- H-1 and H-2: To request a scatter plot of (standardized) residual against X to check the linearity assumption.

Kim HY. Statistical notes for clinical researchers: simple linear regression 3 - residual analysis. Restor Dent Endod. 2019 Feb 12;44(1):e11. doi: 10.5395/rde.2019.44.e11. PMID: 30834233; PMCID: PMC6387894.

Summary Key Requirement #1 & #2

Code	Description
FR1	The system shall detect the presence of a DJI Matrice 100 drone at a minimum distance of 100 meters.
FR3	The system shall classify detected activity as either a drone or a non-drone with at least 70% accuracy.

Notes:	**The system is able to detect a drone with at least 70% of accuracy when the drone is 21m from the sensors (interpolation analysis). Based on the in-depth analysis of the results, we are confident to be able to detect a drone with at least 70% of accuracy up to a distance of 25m.**

Key Requirement #3

Code	Description
FR6	The system shall passively detect the presence of a DJI Matrice 100 drone in an unobstructed environment.

Traceability and Testing

Test Cases

Code	Test Case Name
TC-FR1-01	Minimum Detection Distance
TC-FR1-02	Valid Drone Detection
TC-FR2-01	Passive Sensing Verification
TC-FR3-01	Drone Classification Accuracy Non-Drone
TC-FR3-02	Drone Classification Accuracy with Drone
TC-FR3-03	Drone Classification Accuracy with Mixed Audio
TC-FR3-04	Detection Shorter than Minimum Run
TC-FR4-01	Processing Latency

Test Cases

Code	Test Case Name
TC-FR5-01	120-Degree Detection Window
TC-FR6-01	Detection in Unobstructed Environment
TC-DR1-01	1-Hour Portable Operation
TC-DR2-01	Removable Power Source
TC-DR3-01	Maximum Dimensions
TC-DR4-01	Maximum Weight
TC-TR1-01	FAA Compliance Testing
TC-TR2-01	Maximum Detection Range

DO-160

Code	Test Case Name
DO-160-TC-OR1-01	DO-160-TC-OR1-01 Section 5.4.13 Outdoor Temperature Operation at Different Temperatures Test
DO-160-TC-OR1-02	DO-160-TC-OR1-02 Section 5.4.14 Outdoor Temperature Operation at a Given Temperature

DO-160: Thermal Chamber Testing

- Demonstrate that the system can operate between 0°C and 40°C using a thermal chamber

DO-160: Results of Thermal Chamber Testing

5.5.15. DO-160-TC-OR1-01 Outdoor Temperature Operation at Different Temperatures

Description: Demonstrate that the system can operate between 0°C and 40°C using a thermal chamber
Procedures: 1. Ensure the thermal chamber that will be used to test the system is properly calibrated 2. Use a FLUKE 51 II Thermometer to measure the inside of the thermal chamber 3. Place the system in a Tenney Jr. Thermal Chamber 4. Power the system on 5. Ramp the thermal chamber temperature down to -4°C and flip the switch to "COOLING" 6. After 10 minutes, record system functionality 7. Ramp the thermal chamber temperature up to 0°C 8. After 10 minutes, record system functionality 9. Keep ramping the thermal chamber up every 10°C and repeatedly record system functionality after 10 minutes 10. Once 20°C is reached, flip the switch to "HEAT" 11. Proceed with step 9 until you reach 50°C 12. Once the data is recorded, turn the switch to "OFF" 13. Open the chamber and power off the system
Validation: • The test passes if the system operates normally and maintains required functionality at ambient temperatures of 0°C, 20°C, and 40°C
Requirement that is being tested: OR-01

Graph: Results from testing PDD system in the thermal chamber and what the system got "stuck on"

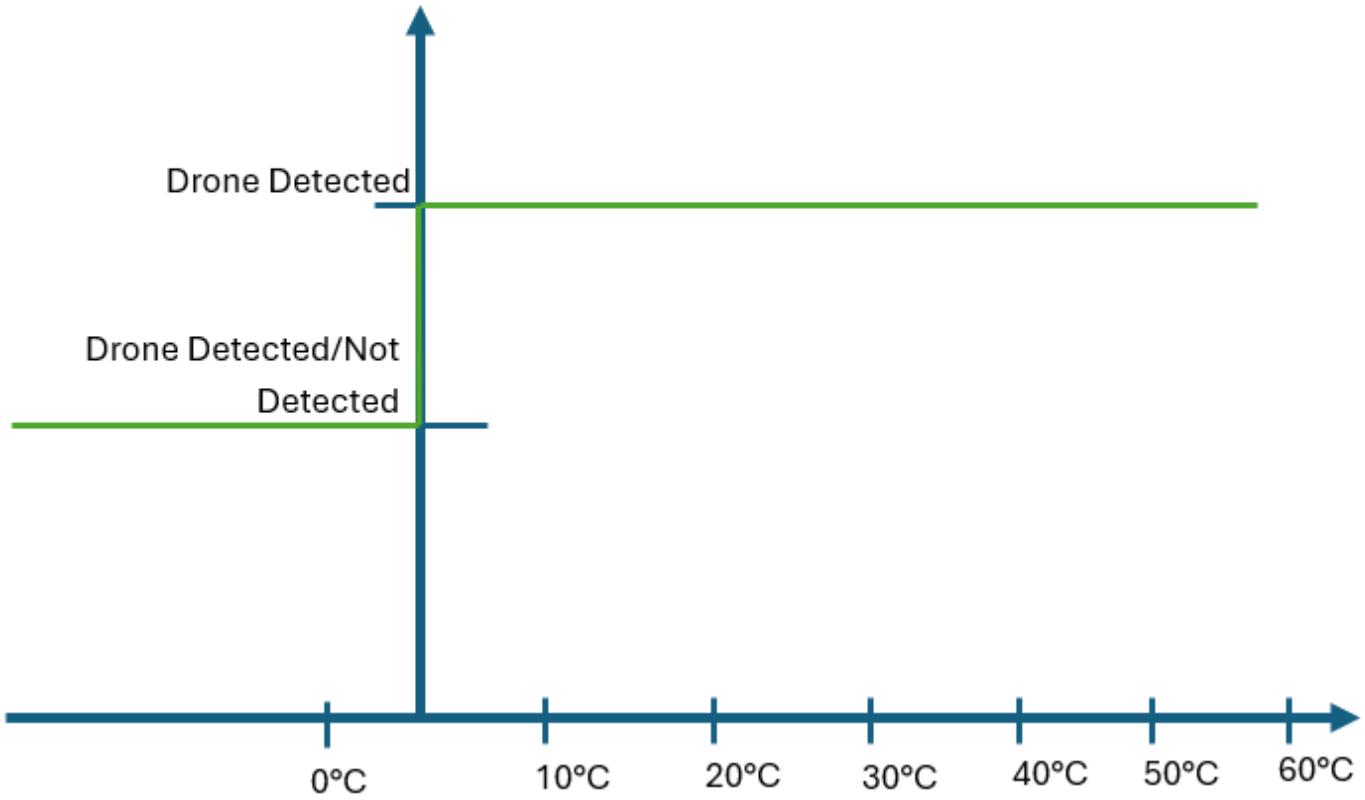

Requirements Traceability Matrix

Requirements Traceability Matrix	
PROJECT NAME	Passive Drone Detection Capstone Project
PREPARED BY	Ally Allman
DATE	4/16/2026
TOTAL No. of SYSTEM REQUIREMENTS	16
TOTAL No. of TEST CASES	23

Notes:

Any box that is filled in green is a completed test case. Yellow is incomplete.

Requirements Traceability		SYSTEM REQUIREMENTS															
		REQ-FR-1	REQ-FR-02	REQ-FR-03	REQ-FR-04	REQ-FR-05	REQ-FR-06	REQ-DR-01	REQ-DR-02	REQ-DR-03	REQ-DR-04	REQ-OR-01	REQ-TR-01	REQ-TR-02	REQ-SR-01	REQ-SR-02	REQ-SR-03
TEST CASE ID's	TC-FR1-01																
	TC-FR1-02																
	TC-FR2-01																
	TC-FR3-01																
	TC-FR3-02																
	TC-FR3-03																
	TC-FR3-04																
	TC-FR4-01																
	TC-FR5-01																
	TC-FR6-01																
	TC-DR1-01																
	TC-DR2-01																
	TC-DR3-01																
	TC-DR4-01																
	DO-160-TC-OR1-01																
	DO-160-TC-OR1-02																
	TC-TR1-01																
	TC-TR2-01																
	TC-SR1-01																
	TC-SR1-02																
	TC-SR2-01																
	TC-SR2-02																
	TC-SR3-01																

Schedule

PDD Journey

Milestone	Expected Completition Date	Actual Completition Date
MRD	11/01	11/01
PRD	11/01	11/01
Individual Development Plan	12/10	12/10
Order Parts	01/15	12/31
Individual Components Design	02/15	01/31
Individual Components Testing	03/15	HW: 01/31 SW: 03/30
System Integration	04/15	04/15
System Testing	04/24	04/15
Prototype Delivery	04/24	Expected: 04/24

Moving Forward

Project Future

- Demo Day 4/24 @ 3pm
- Year 1 of a multi-year project
- Future students may continue to build off our foundation
  - Drone threats are only growing

Proposed Changes For Version 2

- Explore Machine Learning Detection
- Reduce footprint
- Cheaper components
- Increase Code Efficiency
- Focus on Real World Implementation

Documentation

CML Document Tree

Required Documents for the ERAU CESE Capstone Configuration Management Library

Description	Family →	065	066	076	366	002	003	004	005	006	008	001
Part numbers are composed: Family-Instance-Flavor XXX-YYYY-ZZ	Instance ↓	CML Document Matrix	Bill of Materials (BOM)	Assembly Drawings	Source Code	Electrical Schematic-Wiring Diagram	Market Requirements Document (MRD)	Product Requirements Document (PRD)	Test Readiness Review	Design Reviews (PDR and CDR)	Environmental Test Procedures	User Manual
0128		065-0128-02	066_0128_01	076-0128-01	366_0128_01	002_0128_01	003-0128-02	004-0128-02	005-0128-03	006-0128-03_PDR	008_0128_01	001_0128_01
										006_0128_04_CDR		

- 002-0128-01_PCB
- 066_0128_01_BOM
- 366_0128_01_SourceCode
- 001_0128_01_UserGuide.docx
- 003-0128-02_MRD.docx
- 004-0128-02_PRD.docx
- 005-0128-03_TRR.docx
- 006-0128-03_PDR.pptx
- 006-0128-04_CDR.pptx
- 008_0128_01_TestProcedures.docx
- 065-0128-03_DocumentTree.xlsx
- 076-0128-01_AssemblyDrawing.png
- PDD_Poster_V1.pdf
- PDD_Poster_V2.pdf
- PDD_Poster_V3.pdf

Demo & Poster Design

Demo

PDD
Detecting Drones with Acoustic Sensors
• Range (25m+)
• Real-Time Detection
• Signal Validation
Acoustic Sensor

SEE
SAY
12:03

Poster Topics

PROJECT OBJECTIVES

HARDWARE

SYSTEM BLOCK DIAGRAM

BOX DESIGN

SYSTEM REQUIREMENTS

DESIGN OF EXPERIMENTS

TEST CASES

RESULTS

Poster Layout

Passive Drone Detection (PDD)

Saeed Alfalasi, Ally Allman, Emanuele Bossi, Hannah Gonzales, Duncan Martin, Sam Yorio
Mr. Joseph Chandler, Mr. David Fullmer, Dr. John Sevic, Dr. Ahmed Sulyman

System Block Diagram

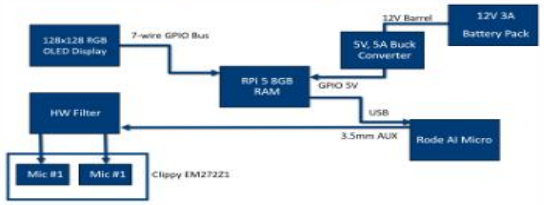

DOE

Method	Range	Size (≤50 cm)	Weight (≤10 kg)	Next Steps
Acoustic	25 m+	Yes	Yes	Improve filtering, amplification, and testing to extend range
IR	10 m	Yes	Yes	Higher-quality thermal cameras needed (cost, narrow FOV limitations)
RF	2 m	No	Yes	Requires additional testing and improved equipment; limited detection beyond 2 m

Table 1. Design of Experiments (DOE)

Project Objectives

Goal

- Develop a **fully passive, covert** UAV detection system

Approach

- Selected **acoustic sensing** over IR and RF modalities
- Detected UAVs using **harmonic signatures**
- Extracted frequency-domain features and apply thresholding
- Implemented a **real-time** detection pipeline
- Designed a scalable architecture (range, hardware, fusion)

Enclosure Design

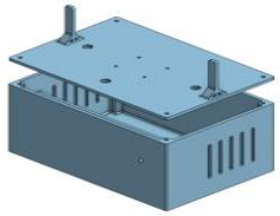

Test Cases

Code	Description
TC-FR1-02	Valid Drone Detection
TC-FR3-02	Drone classification Accuracy with Drone
TC-FR4-01	Processing Latency
TC-FR5-01	120-Degree Detection Window
TC-FR6-01	Detection in Unobstructed Environment
TC-DR1-01	1-Hour Portable Operation
TC-DR2-01	Removable Power Source
TC-DR4-01	Maximum Weight
TC-TR2-01	Maximum Detection Range
DO-160-TC-OR1-01	Outdoor Temperature Operation at Different Temperatures Test

Table 2. Test Cases

Hardware

- Clippy EM272Z1 Microphones
- Rode AI Micro Compact Audio Interface
- 3D Printed Box
- Microphone Windscreen
- Raspberry Pi 5
- Buck Converter
- 12V Power Bank

System Requirements

Code	Description
FR1	The system shall detect the presence of a DJI Matrice 100 drone at a minimum distance of 100 meters.
FR2	The system shall operate using passive sensing only.
FR3	The system shall classify detected activity as either a drone or a non-drone with at least 70% accuracy.
FR4	The system shall process sensor data and provide an output with a latency of less than 10 seconds from the time of detection.
FR5	The system shall passively detect the presence of a DJI Matrice 100 drone within a 120-degree visual window.
FR6	The system shall passively detect the presence of a DJI Matrice 100 drone in an unobstructed environment.

Table 3. Functional Requirements

Code	Description
DR1	The system shall operate for a minimum of 1 hour on portable power (such as a battery)
DR2	The system shall use a removable and replaceable power source.
DR3	The system shall not exceed a maximum dimension of 50 centimeters in any direction.
DR4	The system shall weigh no more than 10 kilograms including the enclosure and battery.

Table 4. Design Requirements

Results

- 74.1% Overall Accuracy
  - 73.3% Ambient Accuracy
  - 74.7% Drone Accuracy

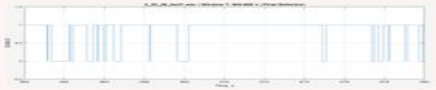

Final drone detection output

Spring 2026

Lessons Learned

Lessons Learned

- Acoustic detection is sensitive to environmental noise
  - Offline algorithm achieved ~73% accuracy under controlled conditions
  - Online implementation produced a high rate of false positives
  - Real world noise significantly impacts performance
- Order critical components early
  - Delays in PCB fabrication risk incomplete system integration
  - Contributed to higher noise
  - Highlights importance of accounting for lead times and schedule margin
- Clear team coordination is important
  - Miscommunications created delays and unclear expectations

Appendix

Filter PCB Layout

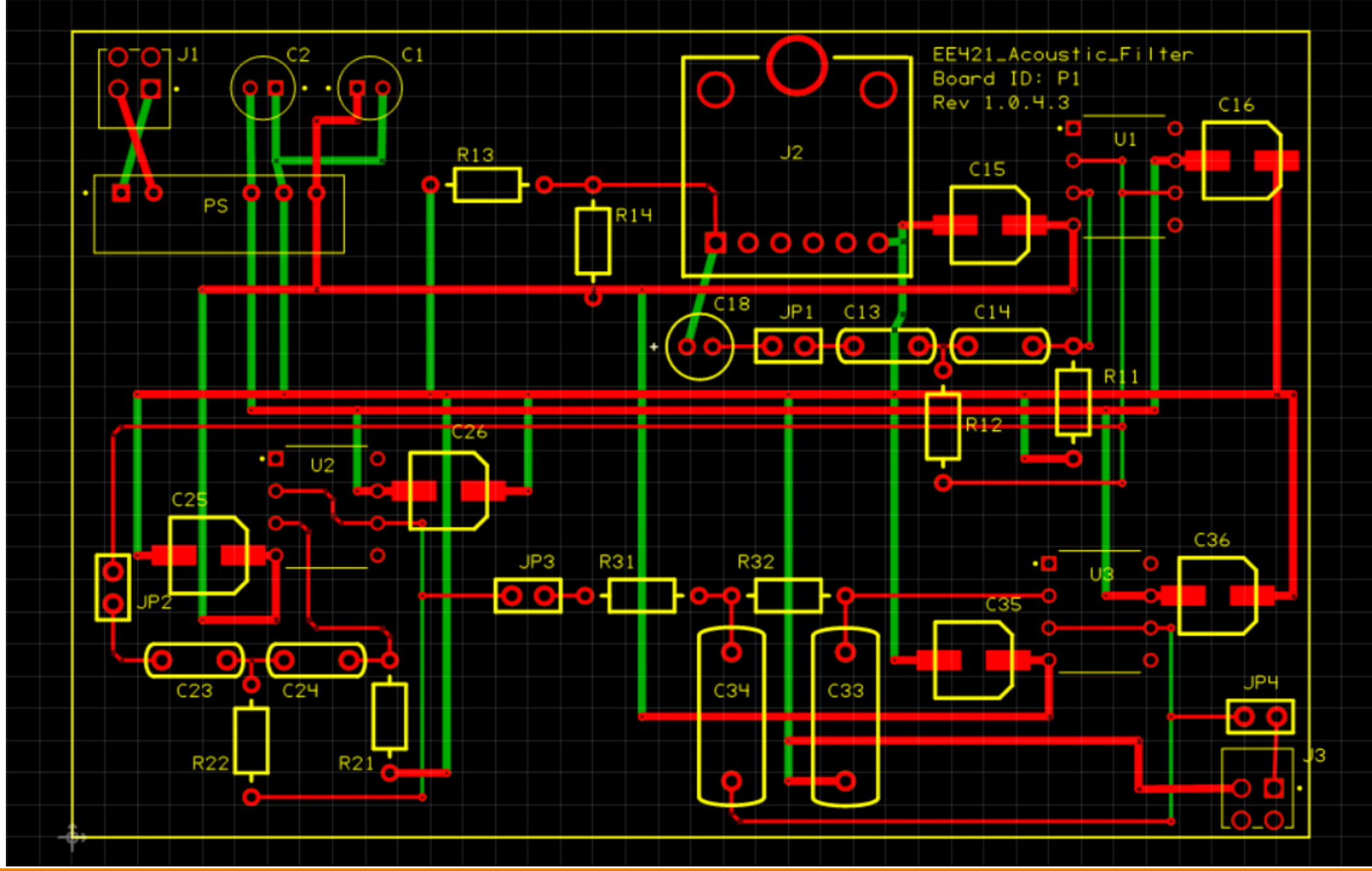

2nd-Order, Sallen-Key High-Pass Filter Circuit

- To filter out frequencies below 200Hz

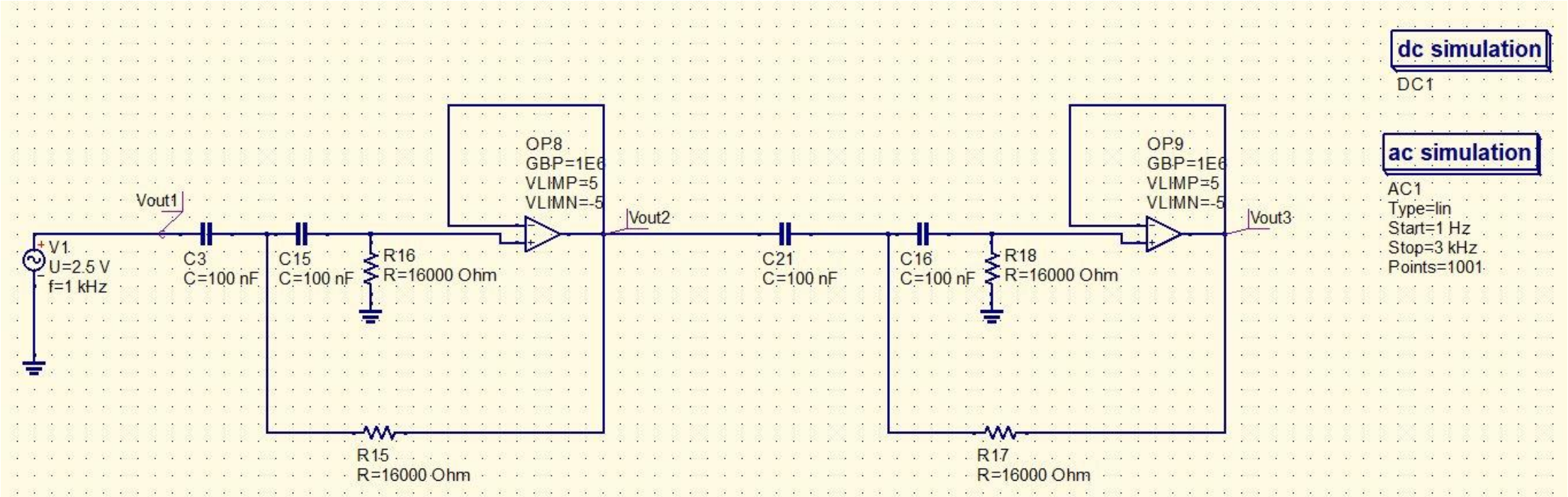

Filter Response

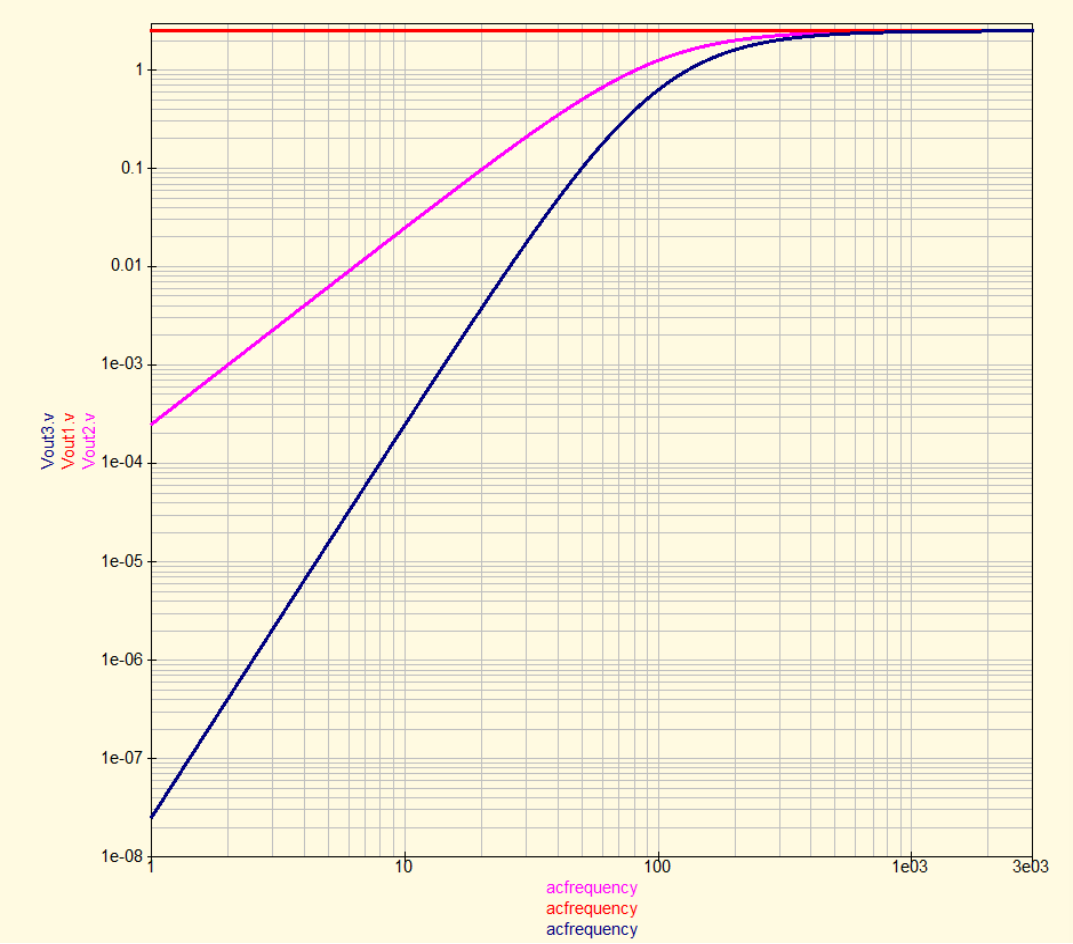

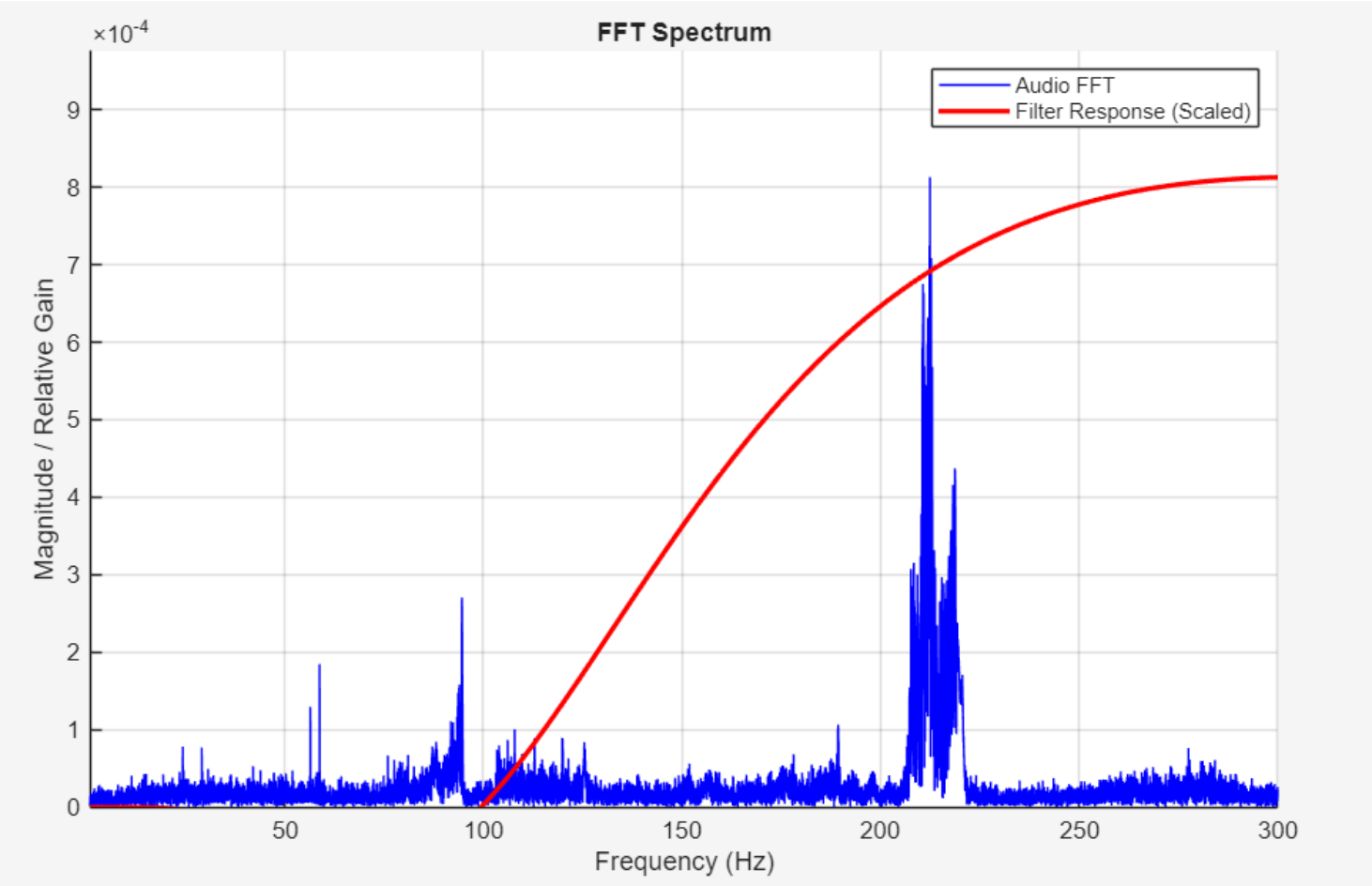

Testing Raw Data (04/15)

Distance_m	WindowDuration_Rec1_s	Accuracy_Rec1_percent	WindowDuration_Rec2_s	Accuracy_Rec2_percent	Overall
2.5			45	97.64496778	97.64497
5	20	99.70014993	45	100	99.90774
10	20	98.95052474	45	99.5556543	99.36946
15	20	72.66366817	45	84.64785603	80.96041
20	20	68.36581709	45	41.92401689	50.05996
25	20	92.003998	45	60.3199289	70.06887
30	20	24.63768116	45	57.9426794	47.69499
35	20	50.02498751	45	54.27682737	52.96857
40	20	99.00049975	45	15.84092424	41.42849
45	20	84.30784608	45	8.553654743	31.86264