INDIVIDUAL DEVELOPMENT PLAN

Version 1.0.0

PASSIVE DRONE DETECTION (PDD)

Emanuele Bossi

December, 8th 2025

AGENDA

BACKGROUND 01

OBJECTIVES 02

MARKET ANALYSIS 03

KEY REQUIREMENTS 04

SYSTEM ARCHITECTURE 05

06 DESIGN TRADEOFFS

07 PROPOSED SOFTWARE DESIGN

08 FINANCIAL ANALYSIS

09 PROJECT SCHEDULE

10 RISK ASSESSMENT

01

BACKGROUND

ESCALATION OF DRONE THREATS

- Since 2021, **>3,000** drone events near US airports, with 11 aircraft in 2025 reporting evasive maneuvers to avoid drones [1].
- Stadium incursions in the U.S. almost doubled, from 1,300 to **2,300** between 2021 and 2024 [2].

IN 2025

9 September, Poland

Russian drones force airspace closures over 4 airports; NATO Article 4 invoked [3].

24 September, USA

NFL game stopped due to hovering drone over ~71,000 fans, underscoring stadium airspace vulnerabilities [4].

22 September, Denmark

Large drones shut Scandinavia's busiest hub for ~4 hours; officials call it the most serious attack yet on Danish critical infrastructure [5].

02

OBJECTIVES

OBJECTIVES

OUR AIM

To develop a reliable, covert, and fully passive drone-detection capability that enhances situational awareness in sensitive environments without emitting any RF or revealing the presence of the system.

THE GOAL

To design, implement, and experimentally validate a first-generation passive detection “box” using an acoustic sensing pipeline, supported by real-time signal processing and a threshold-based detection algorithm capable of identifying Type-1 and Type-2 UAV signatures under controlled field conditions.

PROBLEM STATEMENT

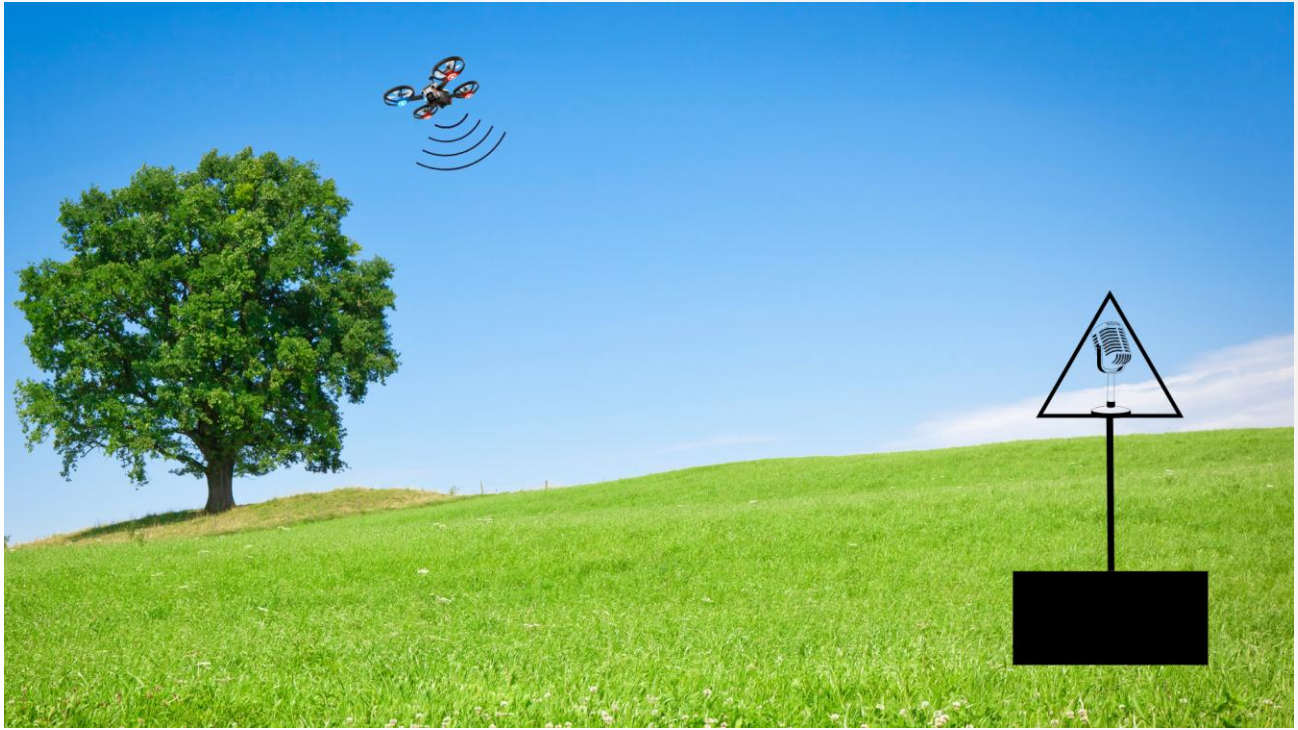

03

MARKET ANALYSIS

MAJOR COMPETITORS

LOCKHEED MARTIN

RAYTHEON

LEONARDO

NORTHROP

DRONESHIELD

DEDRONE

STRENGTHS OF COMPETITORS

ESTABLISHED DEFENSE RELATIONSHIP

Large companies like Lockheed Martin, Raytheon, and Northrop Grumman have long-term contracts with militaries, which provides strong sales channels and credibility.

INTEGRATED SYSTEMS

Many competitors offer fully integrated counter-UAS suites (detection + mitigation) and can bundle hardware, software, and command-and-control functionalities.

MULTI-SENSOR FUSION

Some players already deploy multi-modal detection (radar + RF + EO/IR + acoustic), which improves detection performance across different drone types and environments.

LARGE R&D BUDGETS

Big defense firms can invest heavily in R&D, allowing them to stay ahead in detection, classification, and mitigation technologies.

WEAKNESSES OF COMPETITORS

COST AND PORTABILITY

Many existing detection systems are large, fixed, or expensive, making them less suitable for rapid deployment or small-scale field use.

OVER-RELIANCE ON ACTIVE SENSING

Several systems rely heavily on active radar or jamming approaches, which may be detectable themselves and less “stealthy.”

COMPLEXITY AND POWER REQUIREMENTS

Highly integrated systems may consume a lot of power, require complex installation, and are less suited for compact or dismounted operations.

FALSE ALARM AND CLASSIFICATION CHALLENGES

Differentiating small drones from birds, civilian UAVs, or clutter remains a non-trivial problem, especially in noisy environments.

SWOT ANALYSIS

STRENGTHS

- PASSIVE OPERATION
- PORTABILITY AND MODULARITY
- ONBOARD EDGE COMPUTING
- COST-EFFECTIVE

WEAKNESSES

- LIMITED DETECTION RANGE
- ENVIRONMENTAL SENSITIVITY
- NOVELTY AND MARKET ADOPTION
- HARDWARE CONSTRAINTS

OPPORTUNITIES

- EMERGING MUNICIPIAL AIRSPACE MANAGEMENT NEEDS
- GROWING DRONE THREATS
- DEFENSE AND CRITICAL INFRASTRUCTURE MARKET
- RESEARCH ADVANCEMENTS

THREATS

- COMPETITIVE MARKET
- TECHNOLOGICAL RISK
- REGULATORY AND CERTIFICATION CHALLENGES
- RAPID UAV INNOVATION

04

KEY REQUIREMENTS

MARKET REQUIREMENTS

ID	MARKET REQUIREMENT	DESCRIPTION
MR-1	PASSIVE DETECTION CAPABILITIES	The system must operate completely passively, emitting no RF energy or detectable signals, enabling deployment in sensitive and covert operational environments.
MR-2	EFFECTIVE DETECTION RANGE	The system must detect small UAS at operationally meaningful distances, with software-based signal enhancement (e.g., noise suppression, spectral filtering, and multi-frame integration) improving effective detection range beyond the raw limits of the passive sensing hardware.
MR-3	LOW FALSE-ALARM RATE	The system must maintain a low false-positive rate to ensure alerts remain actionable and to reduce operator fatigue in complex or cluttered environments.
MR-4	SCALABLE AND COST-EFFECTIVE UNIT PRICING	The per-unit cost must remain low enough (target <1,000$) to enable multi-sensor deployments across large perimeters or distributed infrastructure sites.
MR-5	ENVIRONMENTAL AND OPERATIONAL ROBUSTNESS	The system must operate reliably in typical outdoor environments, across weather conditions, temperature variations, and background noise.

PRODUCT REQUIREMENTS

1. FUNCTIONAL REQUIREMENTS (FR): Summarize what the system must accomplish.
    I. Passive Detection Capability,
    II. Performance Expectations,
    III. Core Behaviors.

2. OPERATIONAL REQUIREMENTS (OR): Capture the environmental and usage conditions under which the system must function.

3. DESIGN REQUIREMENTS (OR): Describe the physical, power, size, and hardware-related constraints that the system must satisfy.

4. TEST REQUIREMENTS (TR): Define the evaluations and compliance checks the system must undergo.
    I. FAA Compliance,
    II. Detection Range.

5. SOFTWARE REQUIREMENTS (SR): Summarize the software-side expectations.

SOFTWARE REQUIREMENTS (PART 1)

ID	MARKET REQUIREMENT	DESCRIPTION
SR-1	REAL TIME SIGNAL PROCESSING	The software shall process incoming digital streams in real time with latency low enough to enable timely UAV detection and alerting ($T \leq 1s$).
SR-2	FEATURE EXTRACTION PIPELINE	The software shall compute relevant acoustic features (e.g., spectral energy bands, harmonic structure, temporal patterns) required for downstream detection and classification algorithms.
SR-3	DETECTION ALGORITHM IMPLEMENTATION	The software shall implement a detection algorithm capable of identifying UAV-like acoustic signatures under varying noise and environmental conditions.
SR-4	CLASSIFICATION ALGORITHM	The software shall classify detected signatures into UAV vs. non-UAV categories using rule-based or machine-learning–based models.

SOFTWARE REQUIREMENTS (PART 2)

ID	MARKET REQUIREMENT	DESCRIPTION
SR-5	CONFIGURABLE THRESHOLDS	The software shall allow operator-adjustable detection thresholds to tune system sensitivity and false-alarm rates for different deployment environments.
SR-6	FAULT HANDLING AND LOGGING	The software shall detect subsystem faults, handle exceptions gracefully, and log diagnostic information for post-event analysis and debugging.
SR-7	DATA OUTPUT AND ALERTING	The software shall generate standardized alert messages and transmit them to the communications module for user notification.

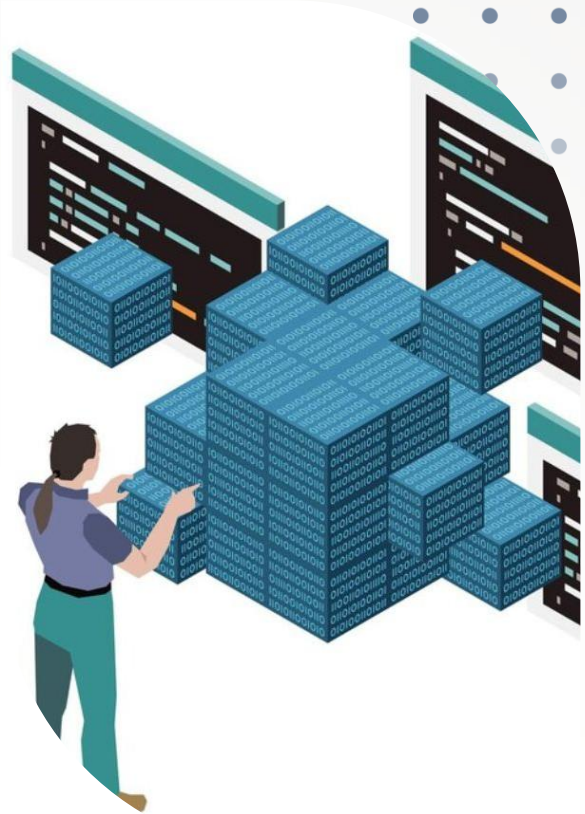

05

SYSTEM ARCHITECTURE

HIGH-LEVEL ARCHITECTURE

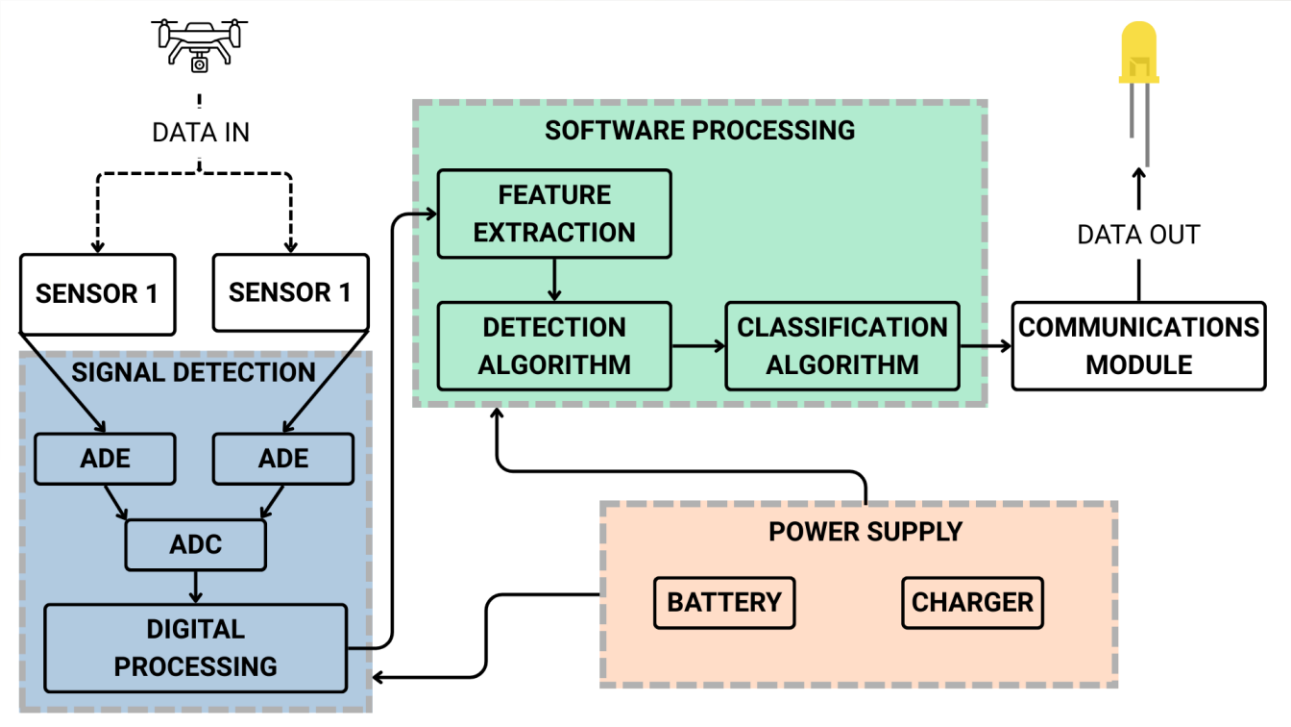

SOFTWARE PROCESSING

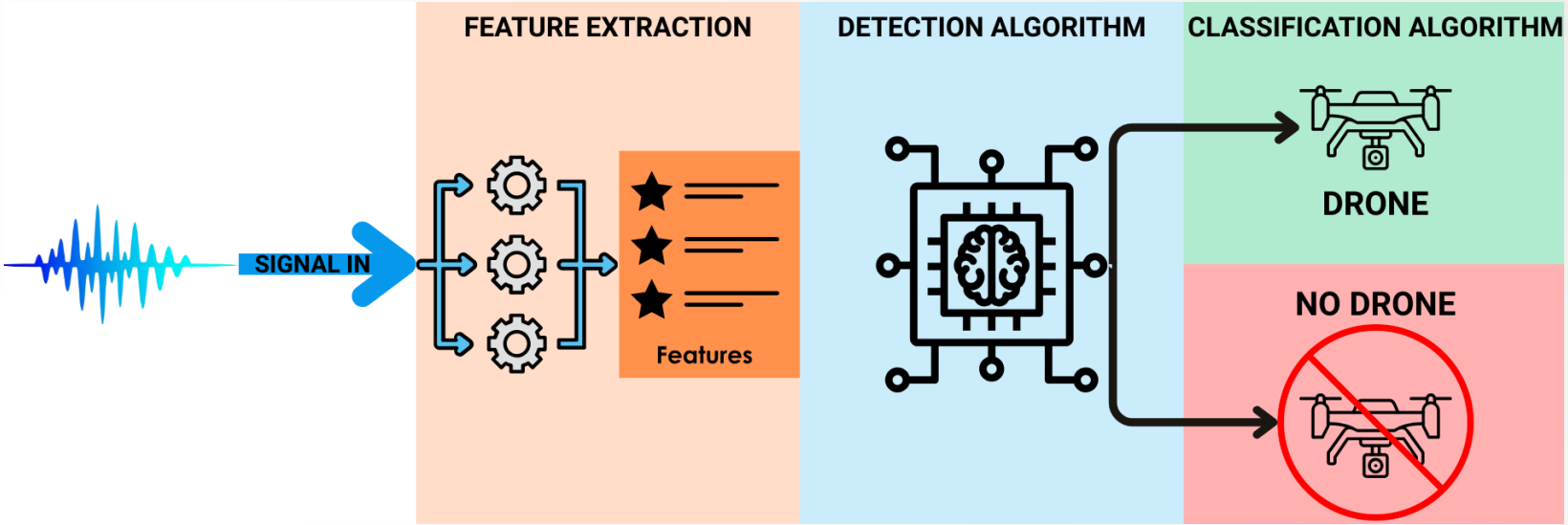

06

DESIGN TRADEOFF STUDY

SENSING MODALITY SELECTION

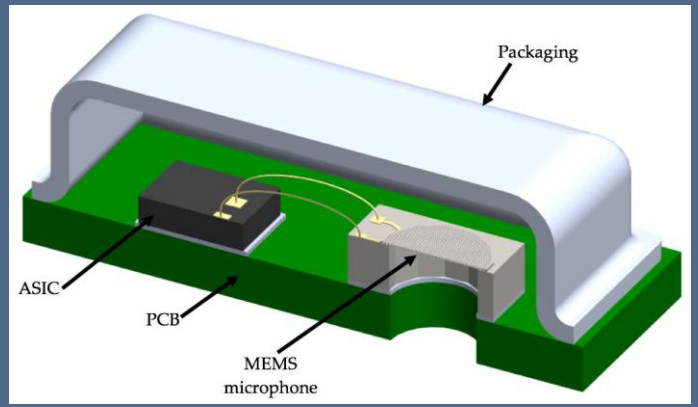

MODALITY	BENEFITS	DRAWBACKS
ACOUSTIC SENSING	• Low-cost hardware • Well-suited DSP pipeline • Ml compatibility • Early prototype friendly	• Highly sensitive to ambient noise • Short sensing range • Directional uncertainty • Large dataset requirements for ML
INFRARED (IR) SENSING	• Unaffected by ambient audio noise • Potential for longer-range detection • Simple baseline algorithm	• High hardware cost • High computational load • Environmental vulnerabilities • Datset difficulty
ELECTROMAGNETIC INTERFERENCE (EMI) SENSING	• Unique UAV signatures • ML-friendly spectral signatures • More robust to environmental noise than acoustic	• Moderate-to-high hardware complexity • Complex DSP pipeline

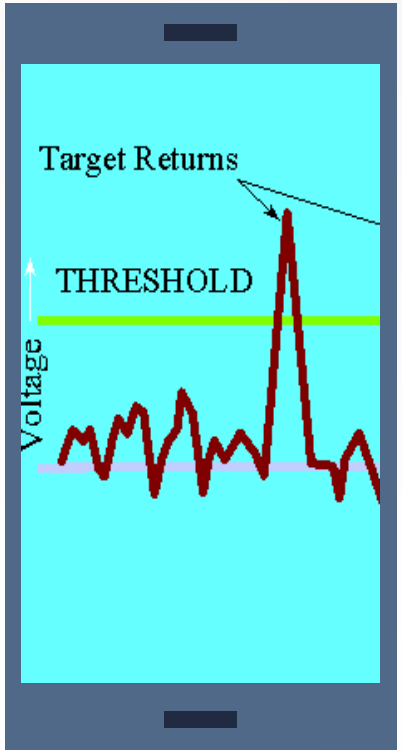

DETECTION METHODOLOGY

MODALITY	BENEFITS	DRAWBACKS
THRESHOLD-BASED DETECTION	• Extremely low computational cost • No training data required • Fast to implement • Fully interpretable behavior • Enables early system testing	• Highly sensitive to noise and environmental variability • High false-alarm rate • Poor generalization • Single-feature dependence • Requires manual tuning
MACHINE LEARNING-BASED DETECTION	• Robust to noise and environmental variation • Scales well across sensing modalities • Supports multi-sensor fusion	• High computational load • Large dataset requirements • Complex training pipeline • Storage and memory considerations

ON-DEVICE COMPUTE OPTIONS

MODALITY	BENEFITS	DRAWBACKS
MICROCONTROLLER (MCU)	• Ultra-low power consumption • Deterministic real-time behavior • Simplified hardware integration	• Limited processing throughput • Restricted memory footprint • Reduced flexibility for future updates
SINGLE-BOARD COMPUTER (SBC)	• High computational capacity • Full operating system support • Better model scalability	• Higher power consumption • Higher thermal output • Increased system complexity
COMPANION LAPTOP	• Maximum processing power • High development flexibility • Large storage & memory • Integrated networking & visualization	• High power consumption • Bulky form factor • Limited environmental hardening

07

PROPOSED SOFTWARE DESIGN

DATA INTERFACE

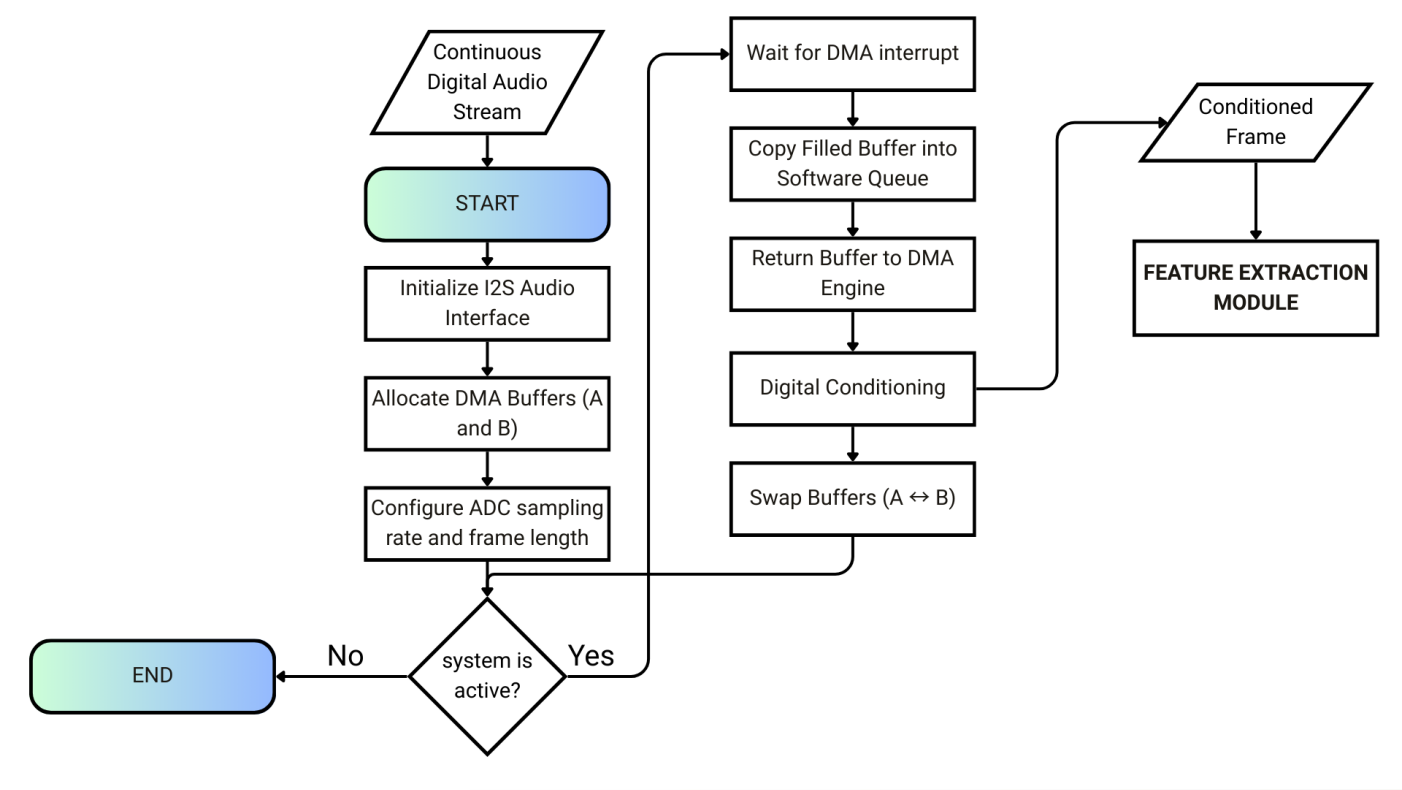

FEATURE EXTRACTION

- Computes STFTs, spectrograms, spectral centroid/bandwidth/flatness, and other UAV-relevant audio features.
- Performs harmonic–percussive separation and peak-enhanced spectral transforms used to identify blade-passing frequencies.

- Handles array operations, frame manipulation, and efficient vectorized math used throughout the DSP pipeline.
- Provides the data structures and fast computations needed to process continuous audio streams in real time.

- Supplies advanced DSP tools such as band-pass filtering, windowing functions, and feature smoothing.
- Detects spectral peaks and harmonic patterns (via scipy.signal.find_peaks) critical for distinguishing UAV tonal signatures.

DETECTION ALGORITHM

- The algorithm evaluates each audio frame using three complementary indicators of UAV presence:

1. **Spectral-Harmonic Condition**
   - Identifies stable tonal peaks and harmonic spacing characteristic of UAV blade-passing frequencies.
   - Uses Librosa + SciPy peak analysis to detect periodic rotor signatures.

2. **Energy-Based Condition**
   - Measures bandpower in UAV-relevant frequency regions.
   - Applies a dynamic threshold scaled by real-time SNR and gain metadata.
   - Helps reject low-energy environmental noise.

3. **Information-Theoretic Condition**
   - Computes KL divergence between the frame spectrum and an adaptive noise model.
   - UAVs produce low-entropy, high-structure patterns unlike background noise.
   - Provides robustness in cluttered outdoor environments.

08

FINANCIAL ANALYSIS

GROSS AND NET REVENUE FORECAST

$188.12
Per-Unit Cost (based on BOM)

$950
ASP in Q3 (Launching Price)

$850
ASP in Q4

$600–$700
ASP range from Q5 to Q8

$855,408
NPV

39%
IRR

GROSS AND NET REVENUE FORECAST

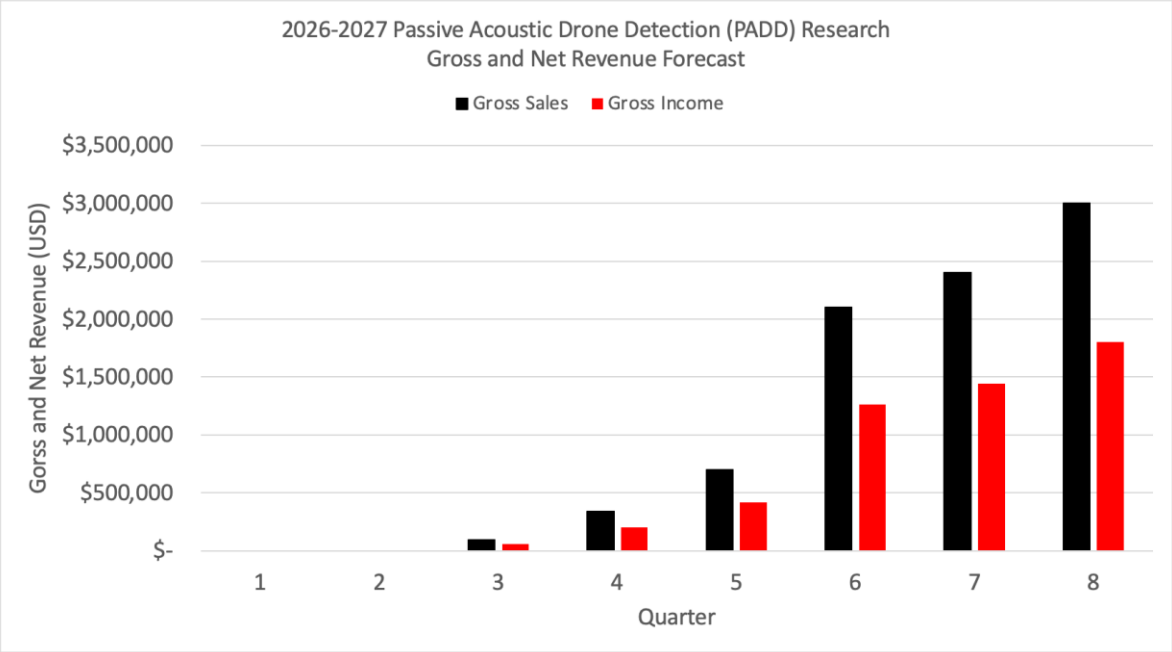

- Product released in Q3
- Broader commercialization in Q4 and Q5
- Price reduction in Q7 and Q8 as anticipating the announcement of Version 2

ACCUMULATED CASH FLOW

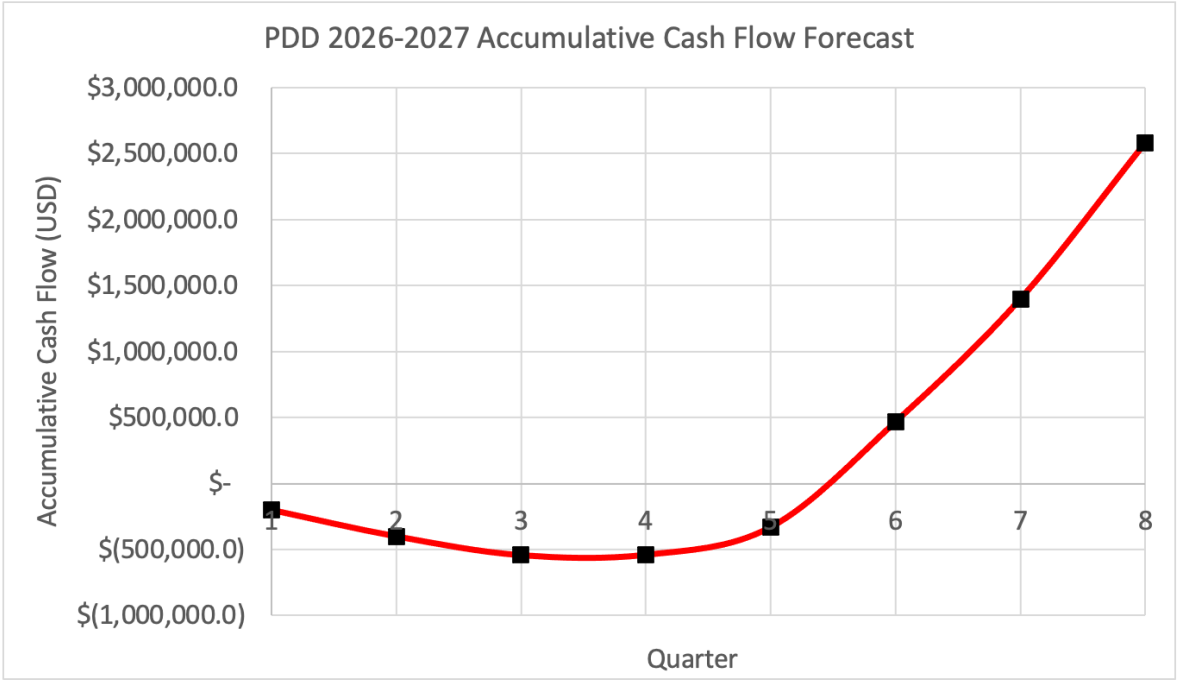

- Until Q3, negative cashflow: personnel costs, early engineering activities, and overhead allocations
- In Q5, two engineers transition from Version 1 to Version 2
- By Q6, break-even point
- From Q6 through Q8, accumulated cash flow accelerates sharply

09

PROJECT SCHEDULE

MAJOR MILESTONES

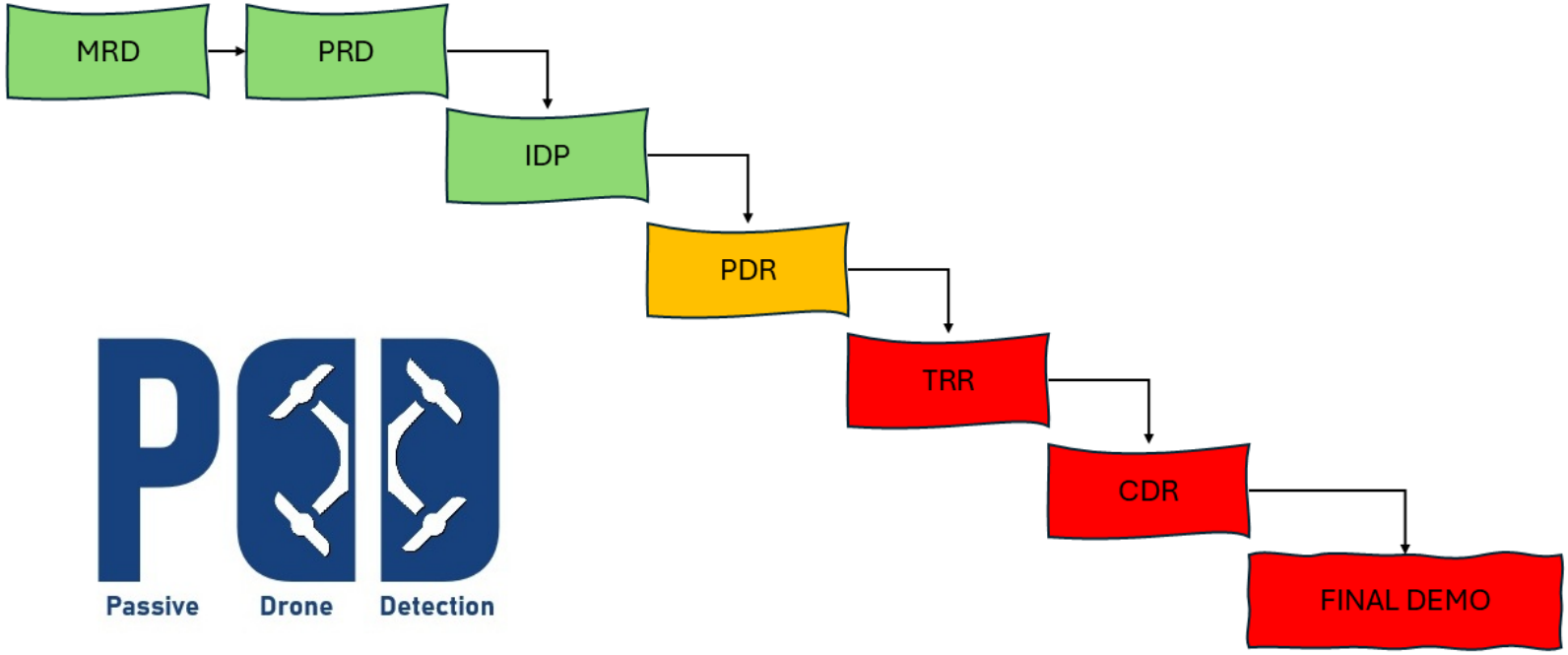

SPRING 2026 ROADMAP

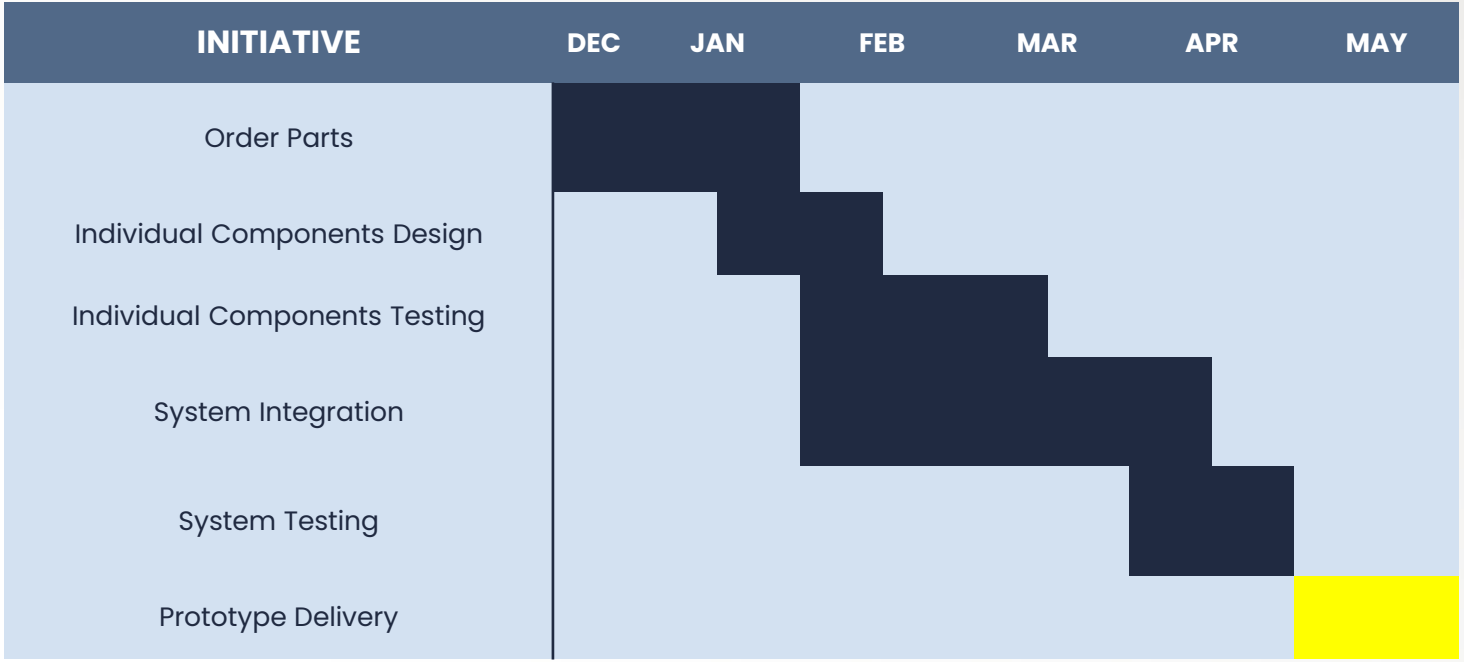

10

RISK ASSESSMENT

RISK MATRIX

RISK	RPN	MITIGATION STRATEGY
Environmental Noise interference	9/9	Conduct controlled indoor tests first; apply adaptive filtering; collect noise profiles from each field site.
Insufficient Dataset	6/9	Begin acoustic data collection early; supplement with synthetic datasets; collaborate with EE team for structured test flights.
Hardware Integration Delays	6/9	Parallelize software development with simulated sensor inputs; maintain weekly integration checkpoints with EE team.
False Alarms/Missed Alarms	6/9	Implement multi-feature thresholding; validate with iterative field testing; prepare fallback logic for ambiguous detections.
Outdoor Test Constraints	4/9	Schedule multiple test days; use indoor acoustic/EMI testbeds; secure FAA approval early.
Schedule Risk	4/9	Create cross-team Gantt dependencies; hold biweekly sync meetings; maintain buffer time for integration phases.

RESOURCES

[1] Reuters. *Increasing drone incidents near US airports, stadiums prompt alarm, officials say*. 2025. https://www.reuters.com/business/aerospace-defense/increasing-drone-incidents-near-us-airports-stadiums-prompt-alarm-officials-say-2025-07-22.
[2] CBS News. *Unauthorized drone flights pose rising threat to U.S. bases, border, civilian events, senator warns*. 2025. https://www.cbsnews.com/news/unauthorized-drone-flights-rising-threat-u-s-bases-border-events-tom-cotton.
[3] Chancellor of Prime Minister, Republic of Poland. *Poland Moves to Invoke NATO Article 4 After Airspace Violation*. 2025. https://www.gov.pl/web/primeminister/poland-moves-to-invoke-nato-article-4-after-airspace-violation.
[4] CNS Maryland. *Ravens drone incidents underscore congressional concerns over security, safety threats*. 2025. https://cnsmaryland.org/2025/09/24/ravens-drone-incidents-underscore-congressional-concerns-over-security-safety-threats.
[5]BBC. *Drone attacks leave Denmark exposed - and searching for response*. 2025. https://www.bbc.com/news/articles/c4g96gvql99o.

Q&A

QUESTIONS