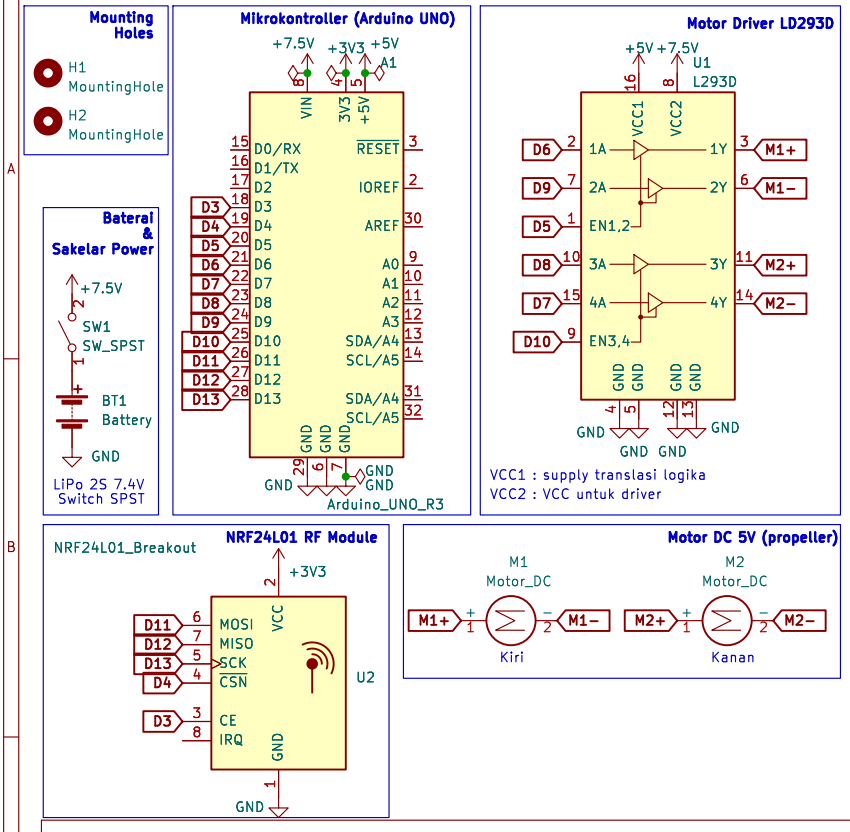

Catatan:
1. Pin MOSI–MISO pada Arduino UNO terdapat pada D11 & D12

Yolivia Robong Langi
Institut Teknologi Bandung

Sheet: /
File: ROV.kicad_sch

Title: Remotely Operated Underwater Vehicle (ROV)

Size: User	Date: 2024–05–12	**Rev: 1.0**
KiCad E.D.A. eeschema (7.99.0–200–gad838e3d73)		Id: 1/1