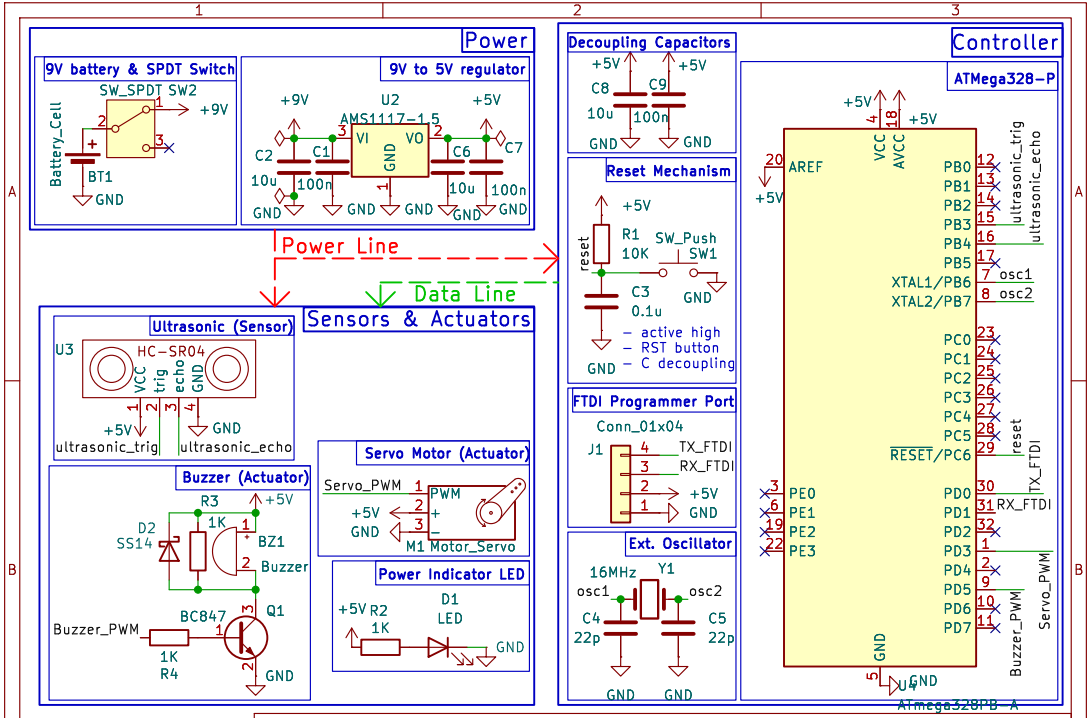

Designed by:
Bostang Palaguna
Bandung Institute of Technology (ITB)

Sheet: /
File: ObstacleAvoider.kicad_sch

Notes

1. R is high enough so that the current through LED is small but the lit is still visible.
VF = 2.1V, for R = 1K -> I = 3mA, -> Pd = 9mW

2. Assumed that ATMega328-P is put in socket that it can be swapped in order broken or want to be programmed externally.

3. PWM from the ATMega for Buzzer is 4kHz.

References

[1] https://somanytech.com/9v-to-5v-converter-circuit/
[2] https://docs.arduino.cc/retired/hacking/hardware/building-an-arduino-on-a-breadboard/
[3] https://forum.arduino.cc/t/atmega328-uno-adc-aref/114077
[4] https://www.alldatasheet.com/datasheet-pdf/pdf/82833/FAIRCHILD/LM7805.html

Title: Obstacle Avoider ATMega328-P

Size: User	Date: 2024-12-05	Rev: 2.0
KiCad E.D.A. 8.0.7		Id: 1/1