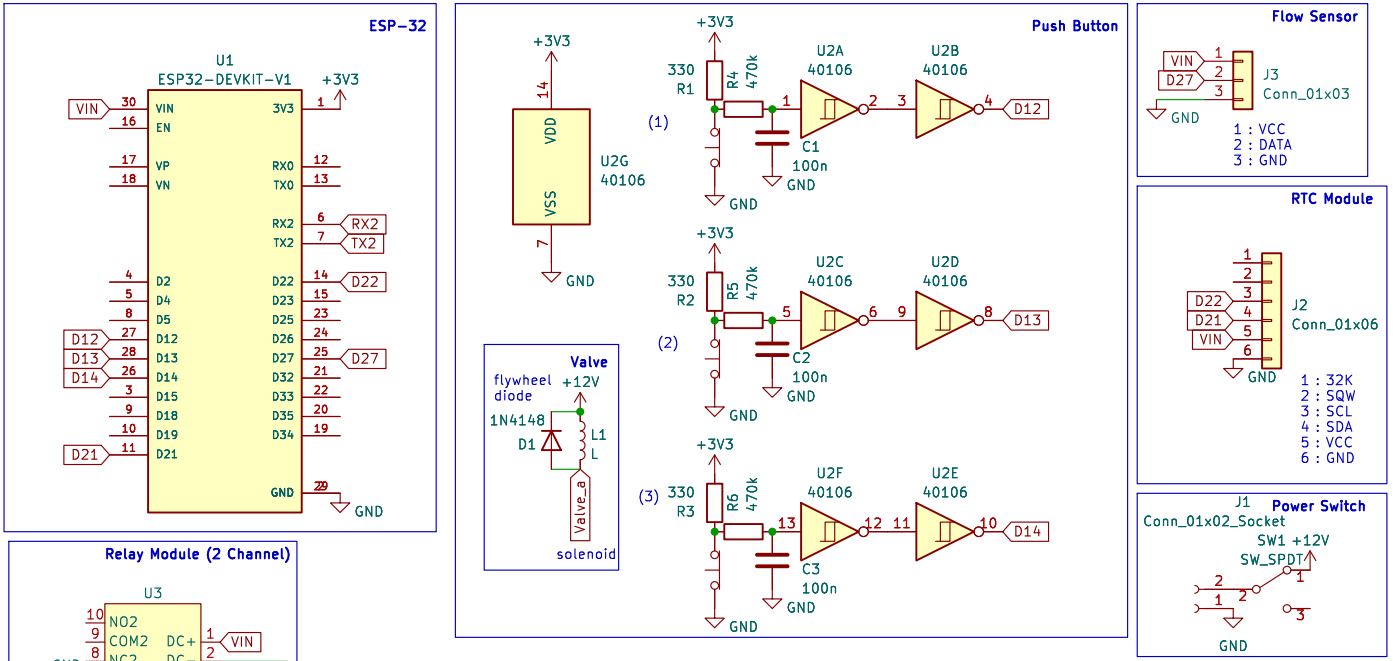

Jefferson Grizzlie

Institut Teknologi Bandung

Sheet: /

File: Smart_Irrigation_System.kicad_sch

Title: Smart Irrigation system

Size: A5	Date: 2024-05-06	**Rev: 2.0**
KiCad E.D.A. kicad (7.99.0-200-gad838e3d73)		Id: 1/1