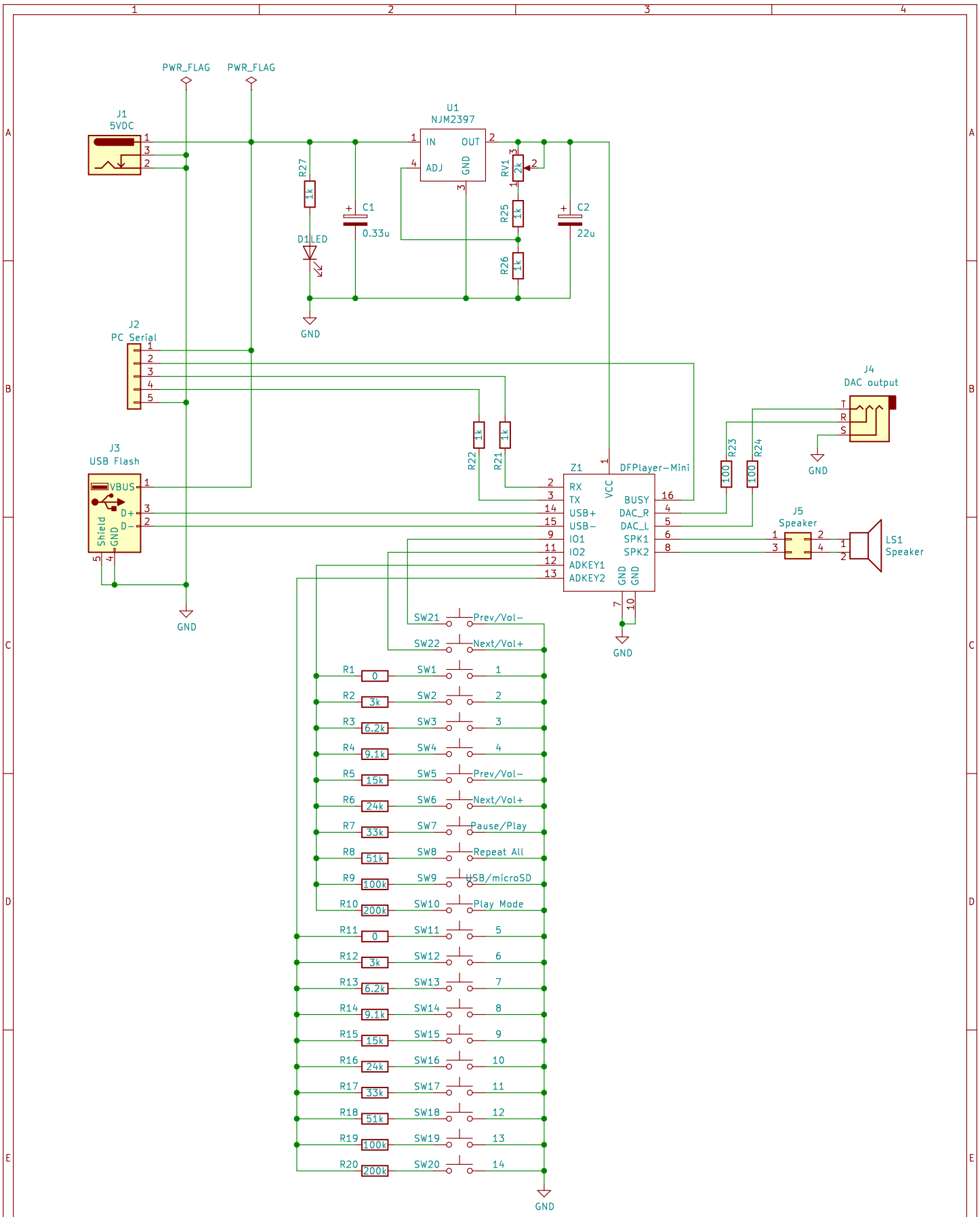

DFplayerMini Evaluation Board

Copyright 2019 BotanicFields, Inc.

Sheet: /

File: bf−011.sch

Title: BF−011

Size: A4	Date: 2019−08−25	**Rev: V02L01**
KiCad E.D.A. kicad (5.1.4)−1		Id: 1/1