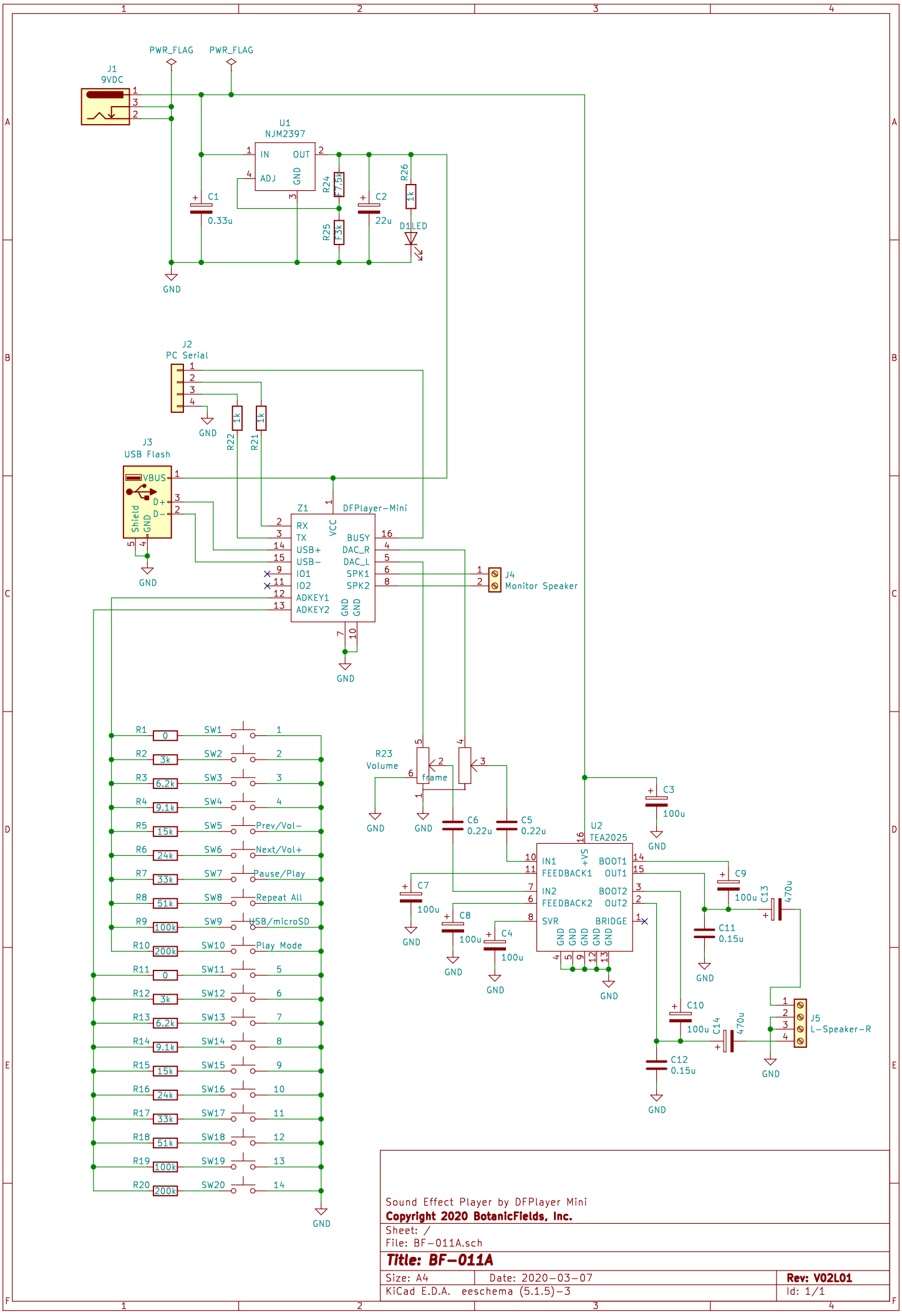

Sound Effect Player by DFPlayer Mini

Copyright 2020 BotanicFields, Inc.

Sheet: /

File: BF−011A.sch

Title: BF−011A

Size: A4	Date: 2020−03−07	**Rev: V02L01**
KiCad E.D.A. eeschema (5.1.5)−3		Id: 1/1