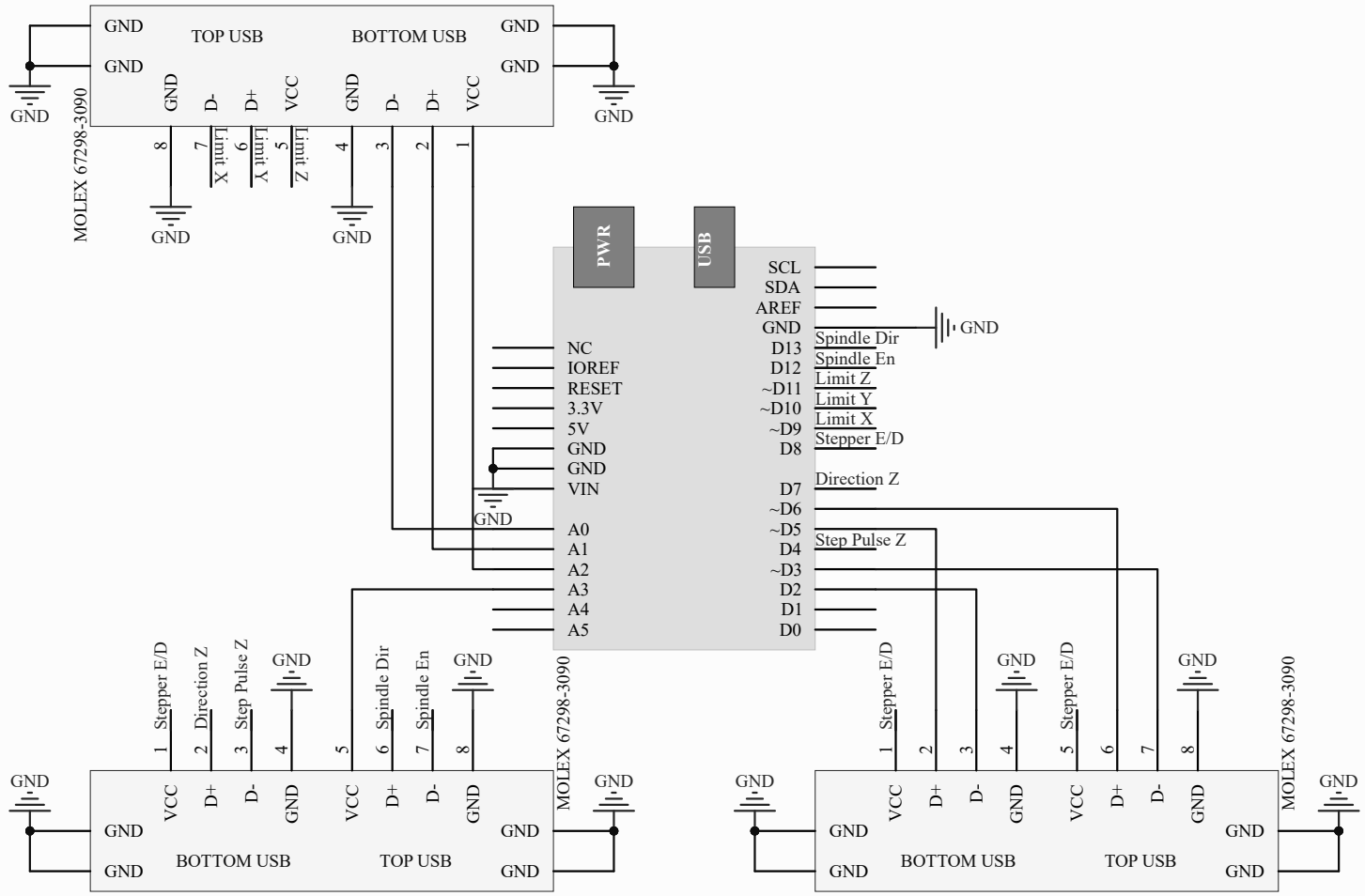

Title	Arduino Uno CNC Hat	
Size	Number	Revision
A		1
Date:	5/30/2024	Sheet of
File:	Sheet1.SchDoc	Drawn By: