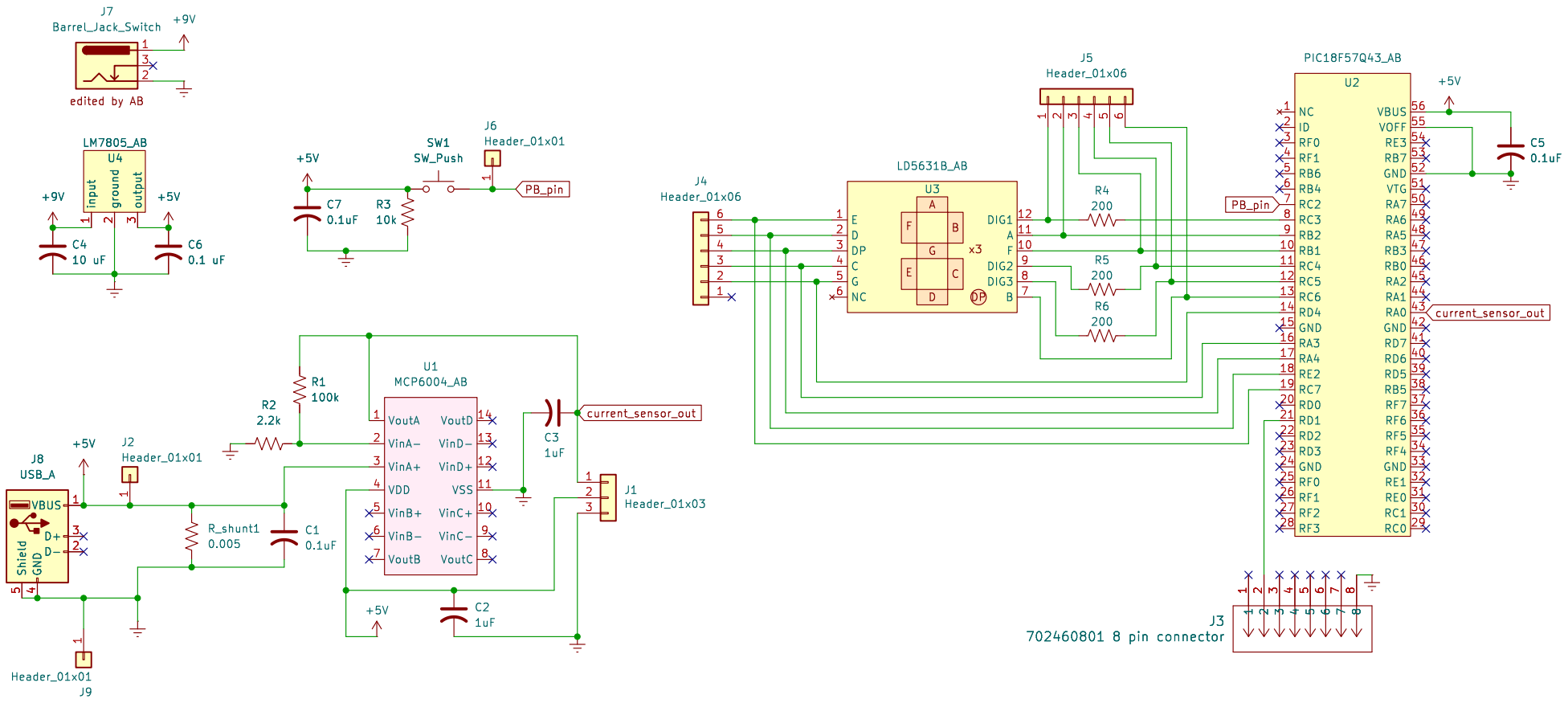

EGR304-203

Sheet: /

File: current_sensor.kicad_sch

Title: Spark Guard Power Monitor Schematic

Size: A4	Date: 2025-10-27	**Rev: A**
KiCad E.D.A. 9.0.4		Id: 1/1