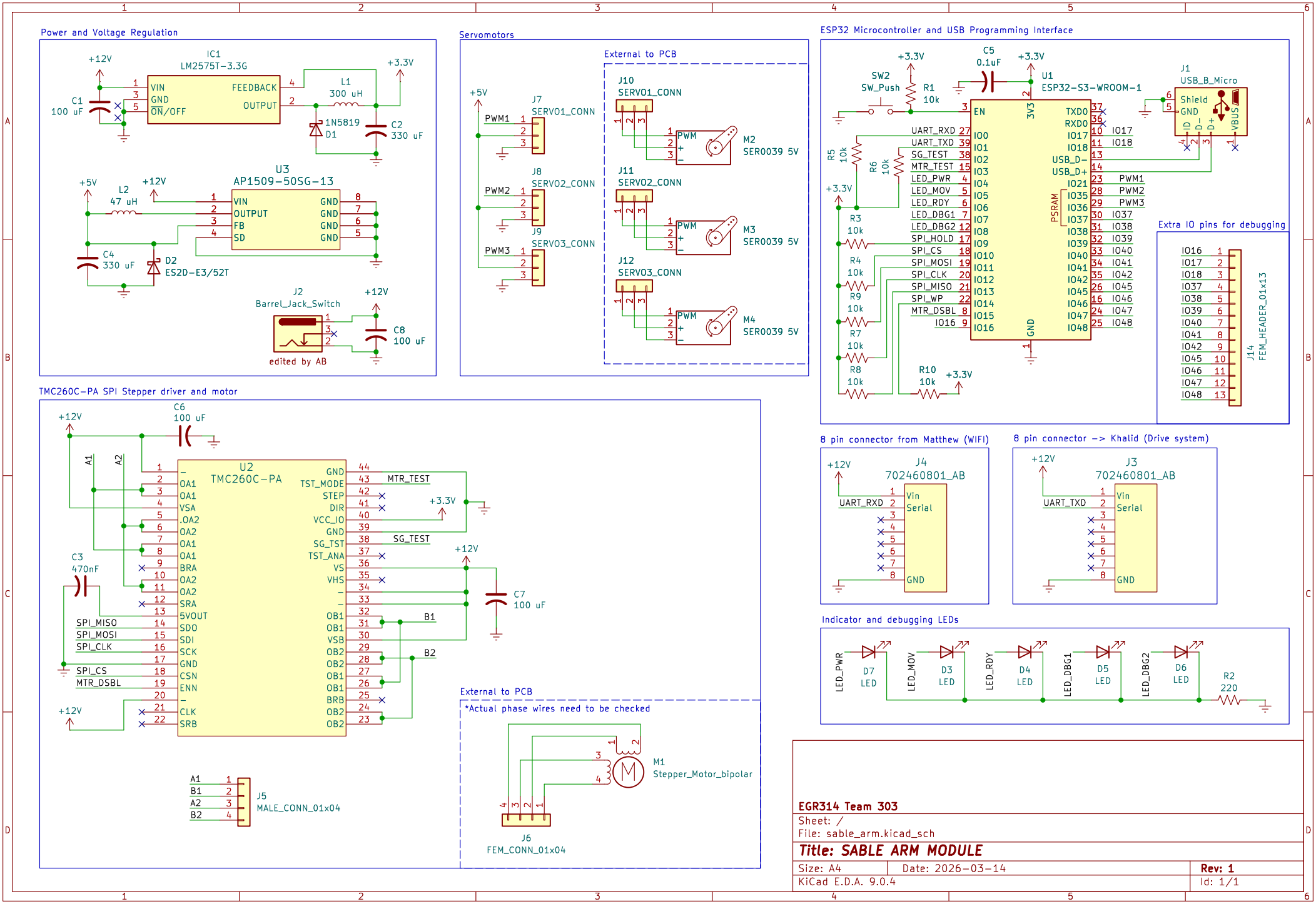
Power and Voltage Regulation
IC1
LM2575T-3.3G
VIN
GND
ON/OFF
FEEDBACK
OUTPUT
+12V
C1
100 uF
L1
300 uH
+3.3V
1N5819
D1
C2
330 uF
U3
AP1509-50SG-13
+5V
L2
47 uH
VIN
OUTPUT
FB
SD
GND
C4
330 uF
D2
ES2D-E3/52T
J2
Barrel_Jack_Switch
C8
100 uF
edited by AB
Servomotors
External to PCB
J7
SERVO1_CONN
J8
SERVO2_CONN
J9
SERVO3_CONN
PWM1
PWM2
PWM3
J10
SERVO1_CONN
J11
SERVO2_CONN
J12
SERVO3_CONN
M2
SER0039 5V
M3
SER0039 5V
M4
SER0039 5V
ESP32 Microcontroller and USB Programming Interface
SW2
SW_Push
R1
10k
C5
0.1uF
U1
ESP32-S3-WROOM-1
EN
3V3
GND
UART_RXD
UART_TXD
SG_TEST
MTR_TEST
LED_PWR
LED_MOV
LED_RDY
LED_DBG1
LED_DBG2
SPI_HOLD
SPI_CS
SPI_MOSI
SPI_CLK
SPI_MISO
SPI_WP
MTR_DSBL
IO16
TXD0
RXD0
IO17
IO18
USB_D-
USB_D+
PSRAM
R5
10k
R6
10k
R3
10k
R4
10k
R9
10k
R7
10k
R8
10k
R10
10k
J1
USB_B_Micro
Shield
GND
VBUS
Extra IO pins for debugging
J14
FEM_HEADER_01x13
8 pin connector from Matthew (WIFI)
J4
702460801_AB
Vin
Serial
GND
8 pin connector -> Khalid (Drive system)
J3
702460801_AB
Indicator and debugging LEDs
LED_PWR
D7
LED
LED_MOV
D3
LED
LED_RDY
D4
LED
LED_DBG1
D5
LED
LED_DBG2
D6
LED
R2
220
TMC260C-PA SPI Stepper driver and motor
U2
TMC260C-PA
C6
100 uF
C3
470nF
C7
100 uF
MTR_TEST
SG_TEST
B1
B2
SPI_MISO
SPI_MOSI
SPI_CLK
SPI_CS
MTR_DSBL
J5
MALE_CONN_01x04
External to PCB
*Actual phase wires need to be checked
M1
Stepper_Motor_bipolar
J6
FEM_CONN_01x04
EGR314 Team 303
Sheet: /
File: sable_arm.kicad_sch
Title: SABLE ARM MODULE
Size: A4
Date: 2026-03-14
Rev: 1
KiCad E.D.A. 9.0.4
Id: 1/1