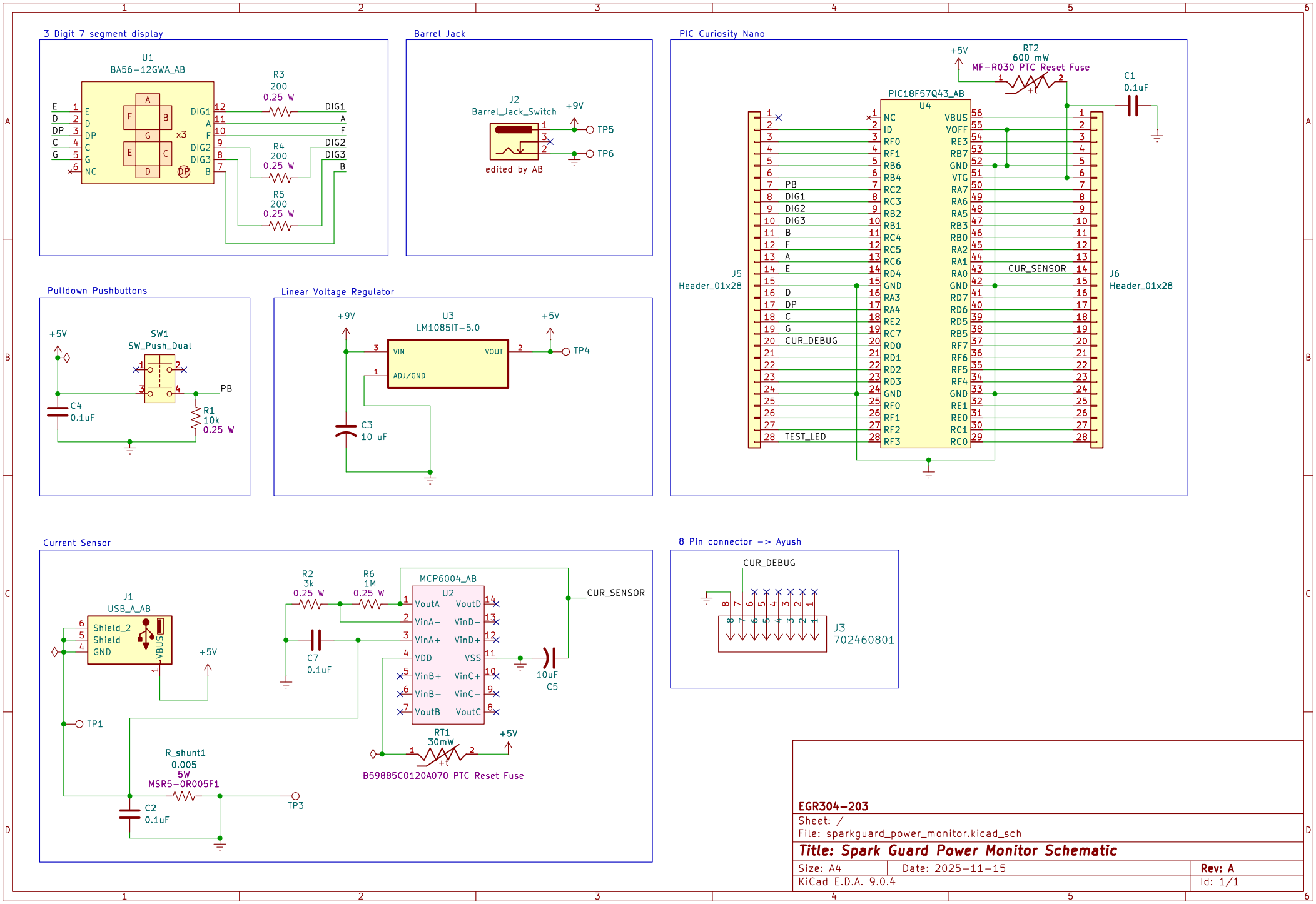

EGR304-203

Sheet: /

File: sparkguard_power_monitor.kicad_sch

Title: Spark Guard Power Monitor Schematic

Size: A4	Date: 2025-11-15	**Rev: A**
KiCad E.D.A. 9.0.4		Id: 1/1