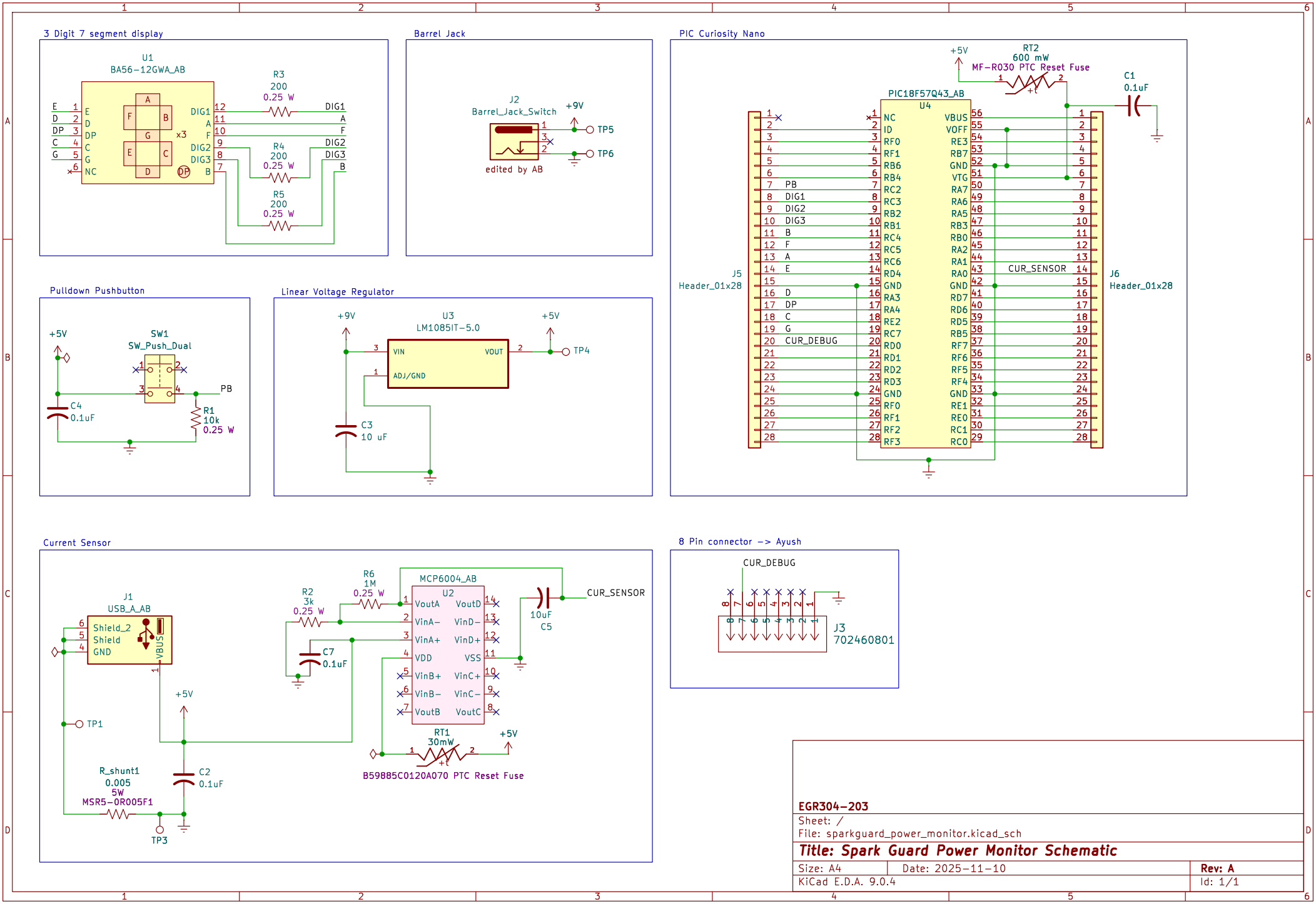


EGR304-203

Sheet: /

File: sparkguard_power_monitor.kicad_sch

**Title: Spark Guard Power Monitor Schematic**

Size: A4 | Date: 2025-11-10 | Rev: A

KiCad E.D.A. 9.0.4 | Id: 1/1