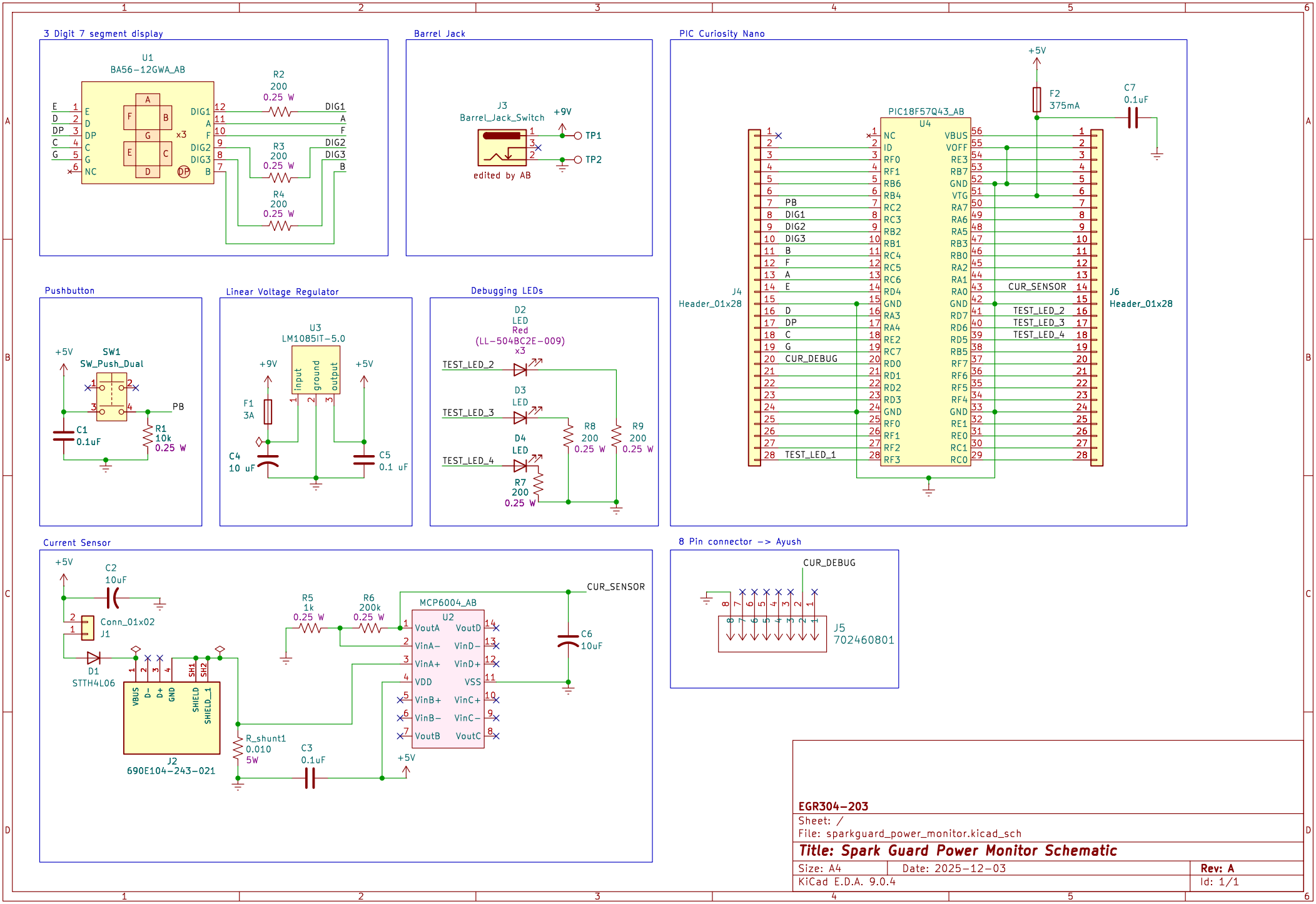
3 Digit 7 segment display
U1
BA56-12GWA_AB
x3
R2
200
0.25 W
R3
200
0.25 W
R4
200
0.25 W
DIG1
DIG2
DIG3
Barrel Jack
J3
Barrel_Jack_Switch
+9V
TP1
TP2
edited by AB
PIC Curiosity Nano
+5V
F2
375mA
C7
0.1uF
PIC18F57Q43_AB
U4
J4
Header_01x28
J6
Header_01x28
CUR_SENSOR
TEST_LED_2
TEST_LED_3
TEST_LED_4
CUR_DEBUG
Pushbutton
SW1
SW_Push_Dual
PB
C1
0.1uF
R1
10k
0.25 W
Linear Voltage Regulator
U3
LM1085IT-5.0
input
ground
output
F1
3A
C4
10 uF
C5
0.1 uF
Debugging LEDs
D2
LED
Red
(LL-504BC2E-009)
x3
D3
LED
D4
LED
R8
200
0.25 W
R9
200
0.25 W
R7
200
0.25 W
Current Sensor
C2
10uF
Conn_01x02
J1
D1
STTH4L06
J2
690E104-243-021
R5
1k
0.25 W
R6
200k
0.25 W
MCP6004_AB
U2
VoutA
VinA-
VinA+
VDD
VinB+
VinB-
VoutB
VoutD
VinD-
VinD+
VSS
VinC+
VinC-
VoutC
C6
10uF
R_shunt1
0.010
5W
C3
0.1uF
8 Pin connector -> Ayush
J5
702460801
EGR304-203
Sheet: /
File: sparkguard_power_monitor.kicad_sch
Title: Spark Guard Power Monitor Schematic
Size: A4
Date: 2025-12-03
Rev: A
KiCad E.D.A. 9.0.4
Id: 1/1