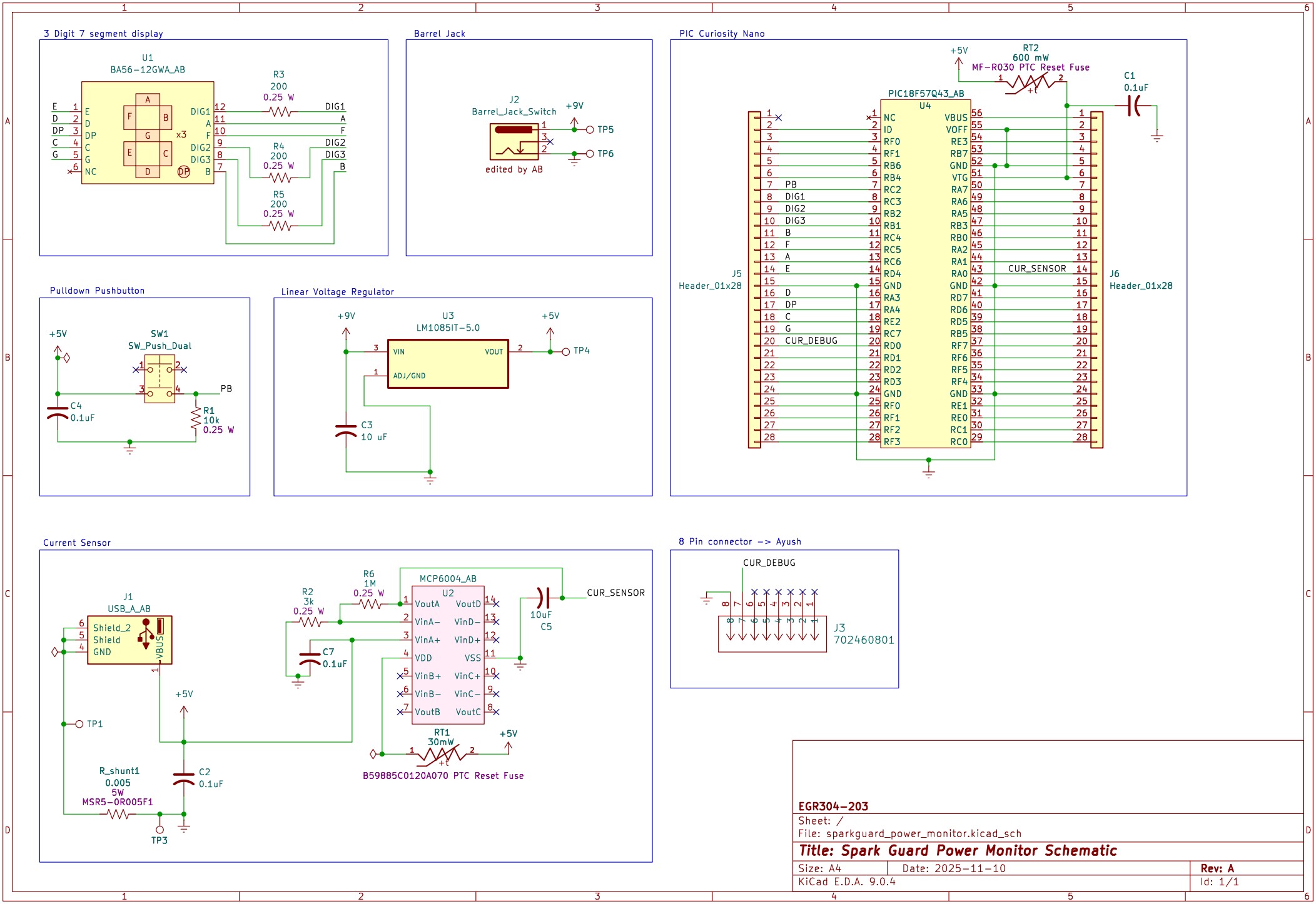
3 Digit 7 segment display
U1
BA56-12GWA_AB
R3
200
0.25 W
R4
200
0.25 W
R5
200
0.25 W
DIG1
DIG2
DIG3
x3
Barrel Jack
J2
Barrel_Jack_Switch
+9V
TP5
TP6
edited by AB
PIC Curiosity Nano
+5V
RT2
600 mW
MF-R030 PTC Reset Fuse
C1
0.1uF
PIC18F57Q43_AB
U4
J5
Header_01x28
J6
Header_01x28
CUR_SENSOR
CUR_DEBUG
Pulldown Pushbutton
+5V
SW1
SW_Push_Dual
PB
C4
0.1uF
R1
10k
0.25 W
Linear Voltage Regulator
+9V
U3
LM1085IT-5.0
VIN
VOUT
ADJ/GND
+5V
TP4
C3
10 uF
Current Sensor
J1
USB_A_AB
Shield_2
Shield
GND
VBUS
TP1
+5V
R_shunt1
0.005
5W
MSR5-0R005F1
TP3
C2
0.1uF
R2
3k
0.25 W
R6
1M
0.25 W
C7
0.1uF
MCP6004_AB
U2
VoutA
VinA-
VinA+
VDD
VinB+
VinB-
VoutB
VoutD
VinD-
VinD+
VSS
VinC+
VinC-
VoutC
10uF
C5
CUR_SENSOR
RT1
30mW
+5V
B59885C0120A070 PTC Reset Fuse
8 Pin connector -> Ayush
CUR_DEBUG
J3
702460801
EGR304-203
Sheet: /
File: sparkguard_power_monitor.kicad_sch
Title: Spark Guard Power Monitor Schematic
Size: A4
Date: 2025-11-10
Rev: A
KiCad E.D.A. 9.0.4
Id: 1/1