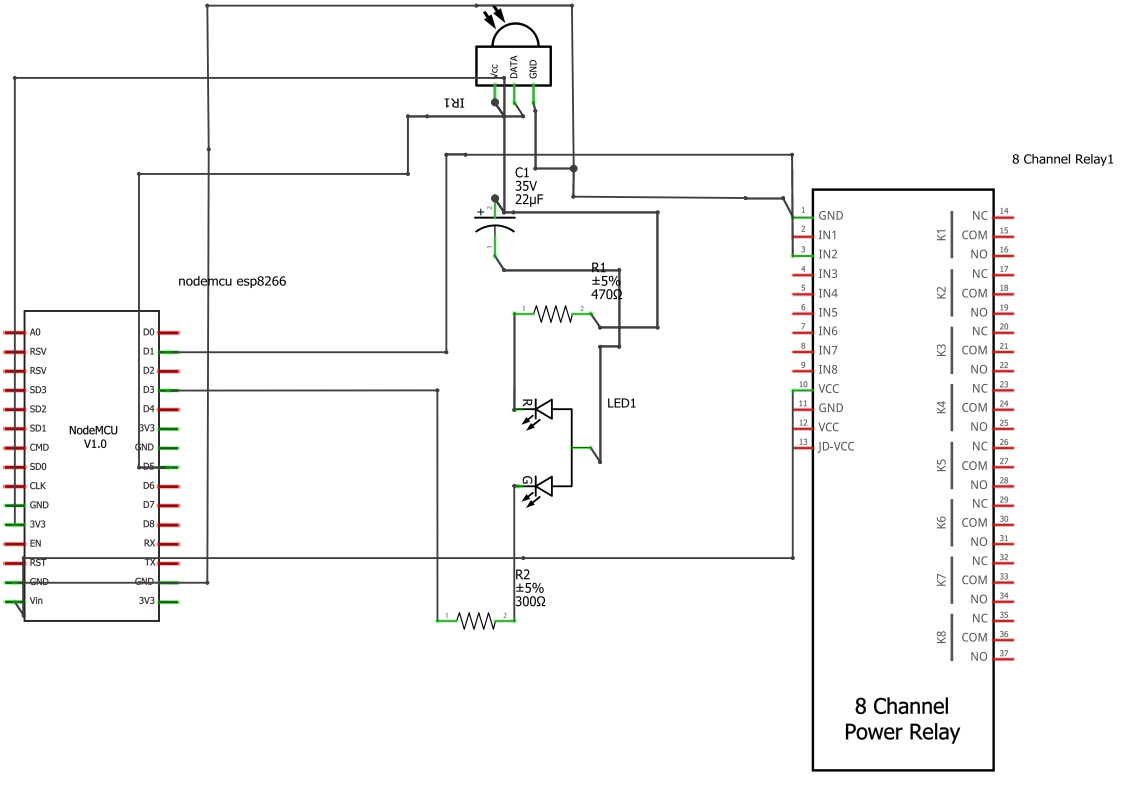
VCC
DATA
GND
IR1
C1
35V
22µF
R1
±5%
470Ω
LED1
R
G
R2
±5%
300Ω
nodemcu esp8266
NodeMCU
V1.0
A0
RSV
RSV
SD3
SD2
SD1
CMD
SD0
CLK
GND
3V3
EN
RST
GND
Vin
D0
D1
D2
D3
D4
3V3
GND
D5
D6
D7
D8
RX
TX
GND
3V3
8 Channel Relay1
GND
IN1
IN2
IN3
IN4
IN5
IN6
IN7
IN8
VCC
GND
VCC
JD-VCC
K1
K2
K3
K4
K5
K6
K7
K8
NC
COM
NO
8 Channel
Power Relay

fritzing