Protein Language Modeling beyond static folds reveals sequence-encoded flexibility

Finn H. Lüth, Victor Mihalia, Milot Mirdita, Martin Steinegger, Burkhard Rost, Michael Heinzinger

Beyza Nur Deniz

Boğaziçi University, Computer Engineering Dept.

20/02/2026

Abstract

Abstract

Motivation

Most discoveries commence with static representations of protein structures. The purpose of this work is to investigate the feasibility of leveraging **protein dynamics** to improve **homology detection**.

Introduction

Introduction

"While traditional MSAs proxy the diversity of sequence space of related proteins (so-called homologs), our description proxies the dynamic space of a single protein sequence within the constraints of the 3Di alphabet."

Proposed Framework

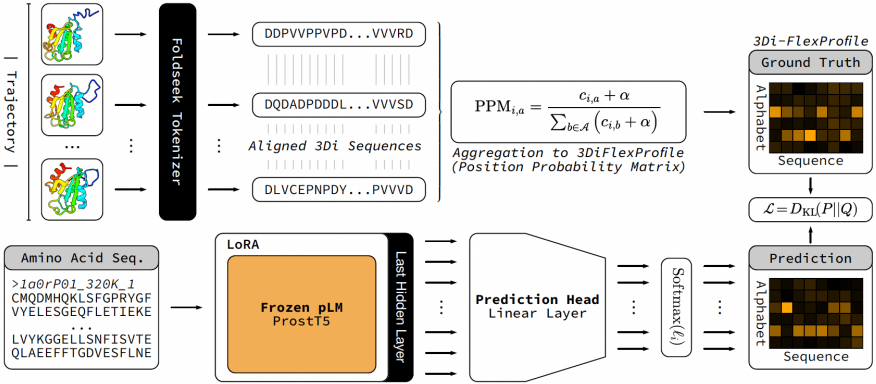

Overview of the proposed framework

Related Work

Static Structural Alphabets (Foldseek & 3Di)

Approach

Protein 3D geometries are discretized into a one-dimensional structural alphabet (3Di), enabling extremely fast large-scale database searches.

Limitation

Only the **static conformation** is represented. Flexibility and conformational dynamics — which are often crucial for protein function — are not captured.

Sequence-to-Structure Language Models (ProstT5)

Approach

Amino acid sequences are translated directly into Foldseek's **3Di structural alphabet**, bypassing the need for explicit 3D structure prediction.

Limitation

Although structure prediction is accelerated, the output still reflects **frozen geometry**. Protein dynamics and conformational variability remain unmodeled.

Dynamic-Predicting (PETIMOT, SeaMoon, ESMDynamic)

Approach

Protein language models (pLMs) are used to predict **motion vectors** or **dynamic contact maps**, capturing conformational behavior beyond static folds.

Limitation

Outputs are high-dimensional and complex (vectors or binary contact maps), making them impractical for:

- Large-scale remote homology search
- Standard alignment-based tools

Materials and Methods

Profiles

- Profiles capture, for each residue position, the probability distribution of alphabet symbols across aligned sequences.

$$PPM_{i,a} = \frac{c_{i,a} + \alpha}{\sum_{b \in A} (c_{i,b} + \alpha)}$$

Dataset

- Training uses **mdCATH**: a subset of **5,398** proteins from CATH with **pairwise sequence identity** $\leq 20\%$.
- Each protein has MD simulations run at **5 temperatures** with **5 replicas**.
- Due to structural degradation at higher temperatures, the authors use only the **lowest-temperature trajectories (320 K)** for training, since degradation primarily adds noise.

Train / Test Split (Topology-Aware)

- Dataset: **N = 5,398** protein domains, each labeled with a **CATH topology** class.
- Compute per-topology class sizes:

$$t(c) = \left|\{(x_i, y_i) \in D : y_i = c\}\right|$$

- Candidate topologies exclude:
  - singletons $(t(c) = 1)$
  - very large classes $(t(c) > 30)$

Evaluation Set Construction

- From remaining topologies $S = \{c : 1 < t(c) < 30\}$, sample **k = 50** evaluation topologies (fixed seed **s = 42**).
- Define splits:

$$D_{\text{eval}} = \{(x_i, y_i) \in D : y_i \in T\}, \quad D_{\text{train}} = D \setminus D_{\text{eval}}$$

- Resulting sizes: **192 eval (3.56%)** and **5206 train (96.44%)**.
- Leakage guard: remove **3rhaA00** from train (subdomain of a test entry; **100%** identity).
- Max train–test sequence identity: **34.3%**.

Base Model

- **ProtProfileMD** is built on top of the **ProstT5** protein language model (pLM).
- ProstT5 extends **ProtT5** by adding a **bilingual training objective**:
  - *Folding:* amino acids → Foldseek **3Di** structure tokens
  - *Reverse folding:* 3Di tokens → amino acids

Parameter-Efficient Finetuning (LoRA)

- Use **LoRA** instead of full fine-tuning: keep W frozen, learn a low-rank update.

$$W' = W + \gamma BA, \qquad B \in \mathbb{R}^{d\times r},\ A \in \mathbb{R}^{r\times d},\ r \ll d$$

- Applied to attention projections **Q,V** with $r = 8$, $\alpha = 16$, dropout $= 0.05$.
- Trainable parameters: **2,199,988**. No gains from larger sets (e.g., QKVO).

Model Architecture

- Input: a sequence of length L is fed into **ProstT5**.
- Last hidden layer output:

$$H \in \mathbb{R}^{L \times d}, \qquad d = 1024$$

- Linear projection (with dropout):

$$\ell = \mathrm{Dropout}(H)\, W + b, \qquad \ell \in \mathbb{R}^{L \times |A|}, \quad |A| = 20$$

- Per-position probability profile:

$$PPM_i = \mathrm{softmax}(\ell_i)$$

Learning Objective

- Minimize KL divergence between target distribution P and predicted distribution Q over valid residue positions.

$$\mathcal{L}_{\mathrm{KL}} = \frac{1}{L}\sum_{i=1}^{L} D_{\mathrm{KL}}(P_i \,\|\, Q_i) = \frac{1}{L}\sum_{i=1}^{L}\sum_{a\in A} P_{i,a}\Big(\log P_{i,a} - \log Q_{i,a}\Big)$$

Visualizing Dynamics

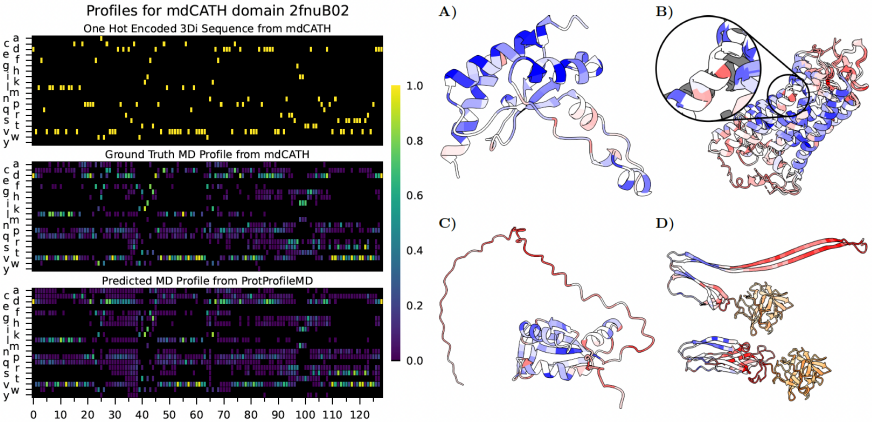

Model's predicted statistical entropy onto 3D structures

Evaluation

- **Global change:** compare **RMSD** (atom-level displacement after alignment) with **substitution-weighted 3Di Hamming distance** (sequence-level divergence in 3Di; substitutions weighted by the 3Di matrix so similar states are penalized less).
- **Local flexibility:** compare **RMSF** (positional fluctuation across a trajectory) with **FlexProfile entropy** (variability of the per-residue 3Di state distribution).

Evaluation

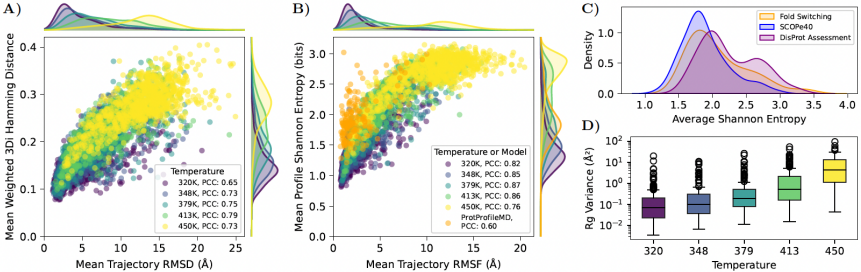

Evaluation

Results & Discussion

Results

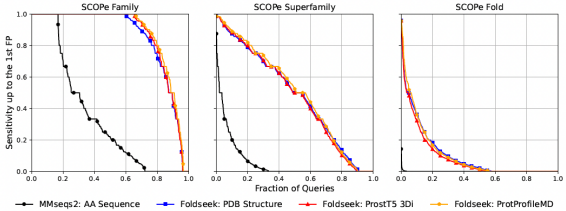

	Fam.	Supfam.	Fold
MMseqs2 AA	0.341	0.057	0.001
PDB Structures	0.855	0.482	0.103
ProstT5 3Di	0.864	0.477	0.091
ProtProfileMD	**0.875**	**0.495**	**0.104**

Results

Discussion

- The gains over static baselines are **modest**, suggesting limited improvement in raw performance.
- However, the key advantage is **speed and scalability**: a pLM can produce dynamic-like profiles without running **weeks-long MD simulations**.
- They report generating dynamic profiles for the **entire human proteome** in **35 minutes** on a single **RTX A6000** GPU.

Why Are the Improvements Modest?

- **Benchmark mismatch:** SCOPe is dominated by relatively rigid proteins, so it is not an ideal testbed for benefits coming from **dynamics-aware** representations.
- **Alphabet bottleneck:** the **20-letter 3Di** alphabet is primarily a *shape* code—it can indicate that a local state changed, but not the underlying dynamical mechanism.
- **Tooling limitation:** Foldseek is optimized for **discrete token matching**, not comparing **probability distributions**; in practice, profiles often get collapsed to fixed letters for search.

Proof of Concept

- **Dynamics can be learned in a discrete space:** MD-derived flexibility signals can be captured through a **1D structural alphabet** (profiles over 3Di states).
- **No explicit 3D reconstruction required:** dynamics-aware profiles can be predicted **directly from sequence**, without first predicting full 3D structure.

Thanks for listening.

Any questions?