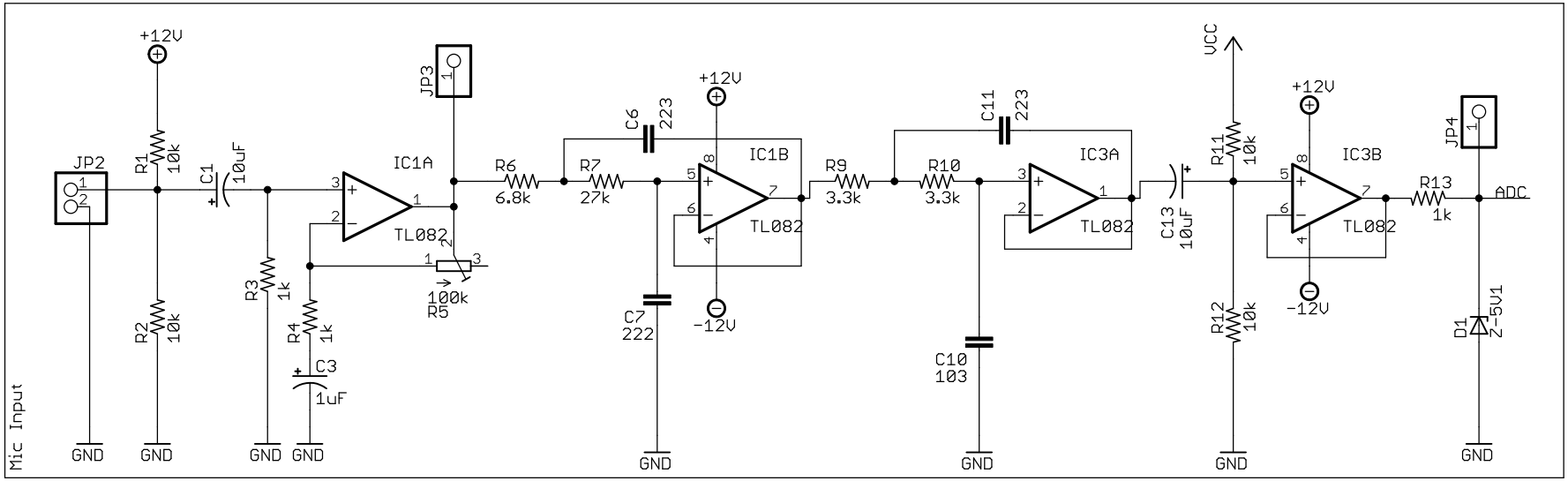

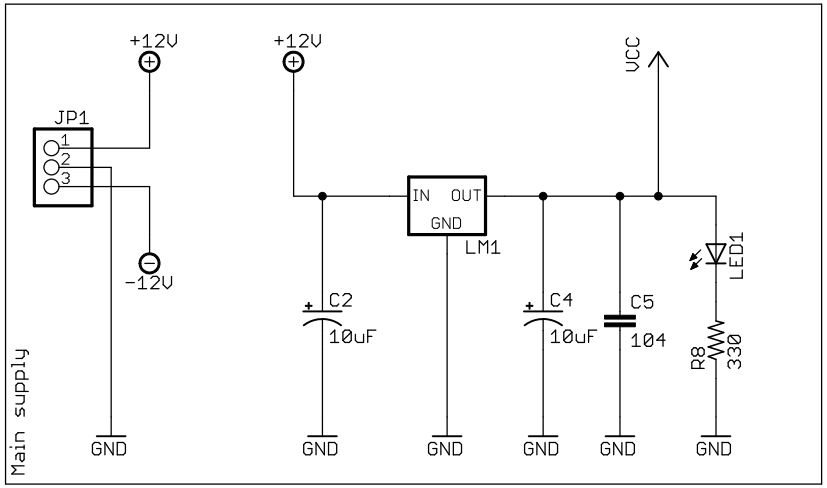

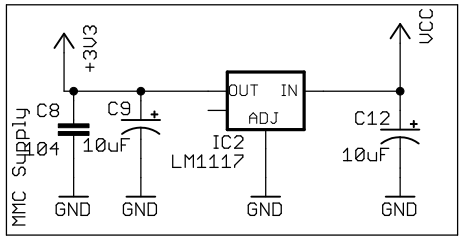

mmcaudio	
03/11/2013 11:35:12	CH
Sheet: 1/3	

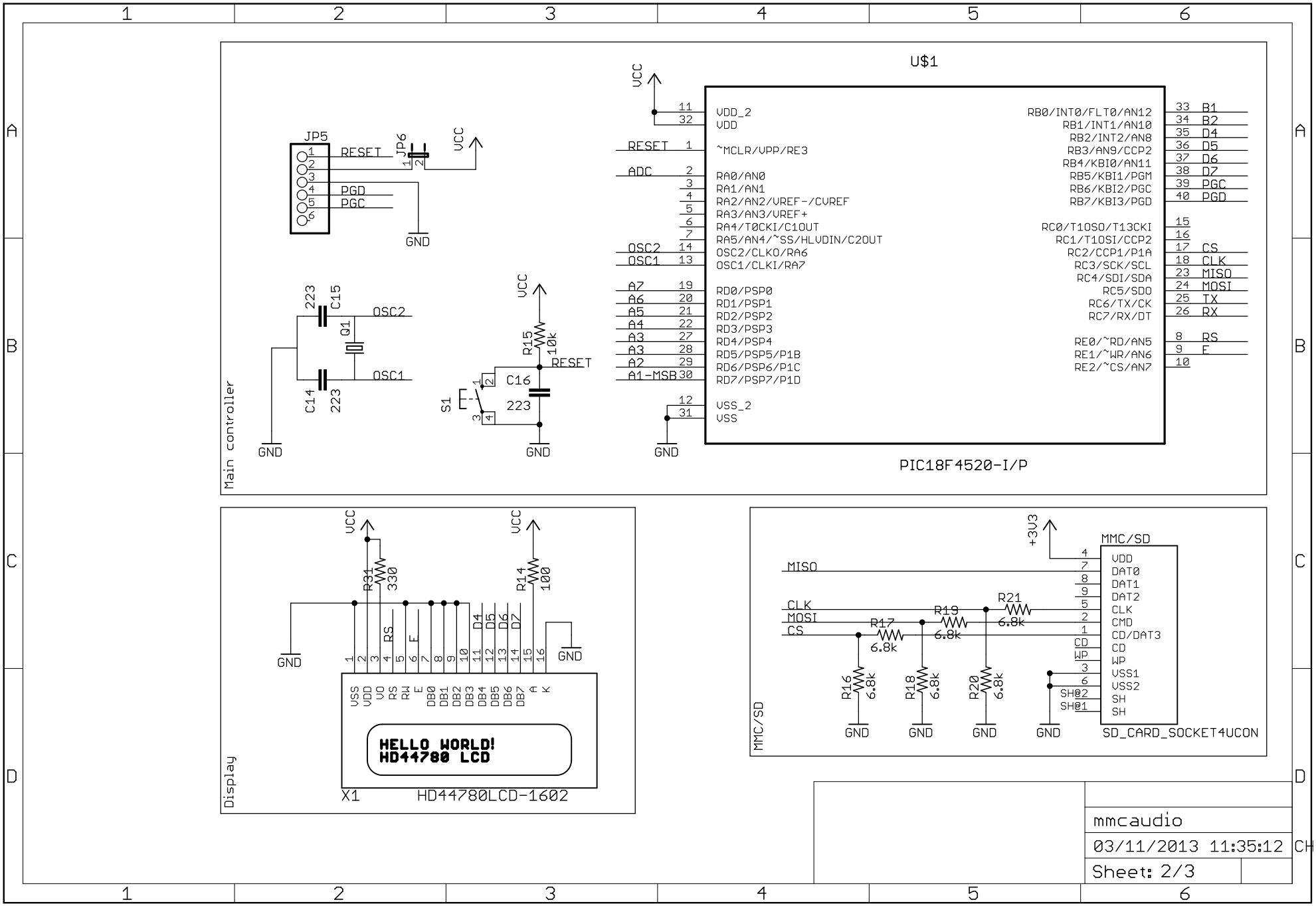
U$1
PIC18F4520-I/P
VDD_2
VDD
~MCLR/VPP/RE3
RA0/AN0
RA1/AN1
RA2/AN2/VREF-/CVREF
RA3/AN3/VREF+
RA4/T0CKI/C1OUT
RA5/AN4/~SS/HLVDIN/C2OUT
OSC2/CLKO/RA6
OSC1/CLKI/RA7
RD0/PSP0
RD1/PSP1
RD2/PSP2
RD3/PSP3
RD4/PSP4
RD5/PSP5/P1B
RD6/PSP6/P1C
RD7/PSP7/P1D
VSS_2
VSS
RB0/INT0/FLT0/AN12
RB1/INT1/AN10
RB2/INT2/AN8
RB3/AN9/CCP2
RB4/KBI0/AN11
RB5/KBI1/PGM
RB6/KBI2/PGC
RB7/KBI3/PGD
RC0/T1OSO/T13CKI
RC1/T1OSI/CCP2
RC2/CCP1/P1A
RC3/SCK/SCL
RC4/SDI/SDA
RC5/SDO
RC6/TX/CK
RC7/RX/DT
RE0/~RD/AN5
RE1/~WR/AN6
RE2/~CS/AN7
B1
B2
D4
D5
D6
D7
PGC
PGD
CS
CLK
MISO
MOSI
TX
RX
RS
E
RESET
ADC
OSC2
OSC1
A7
A6
A5
A4
A3
A3
A2
A1-MSB
JP5
JP6
C15
C14
G1
223
R15
10k
C16
S1
VCC
GND
Main controller
Display
R31
330
R14
100
VSS
VDD
VO
RS
RW
E
DB0
DB1
DB2
DB3
DB4
DB5
DB6
DB7
A
K
HELLO WORLD!
HD44780 LCD
X1
HD44780LCD-1602
MMC/SD
+3V3
VDD
DAT0
DAT1
DAT2
CLK
CMD
CD/DAT3
CD
WP
VSS1
VSS2
SH
SH@2
SH@1
R16
R17
R18
R19
R20
R21
6.8k
SD_CARD_SOCKET4UCON
mmcaudio
03/11/2013 11:35:12
Sheet: 2/3

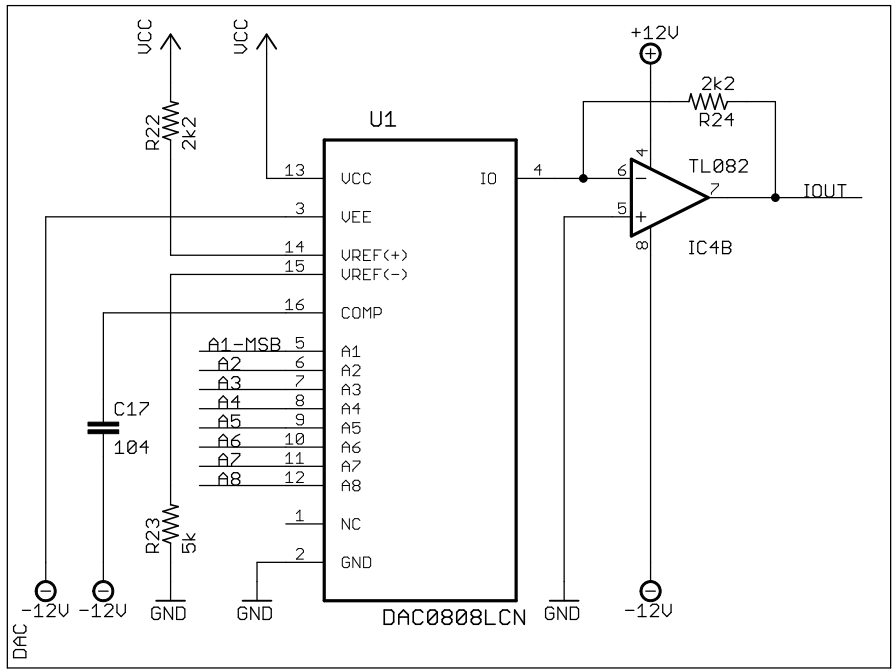

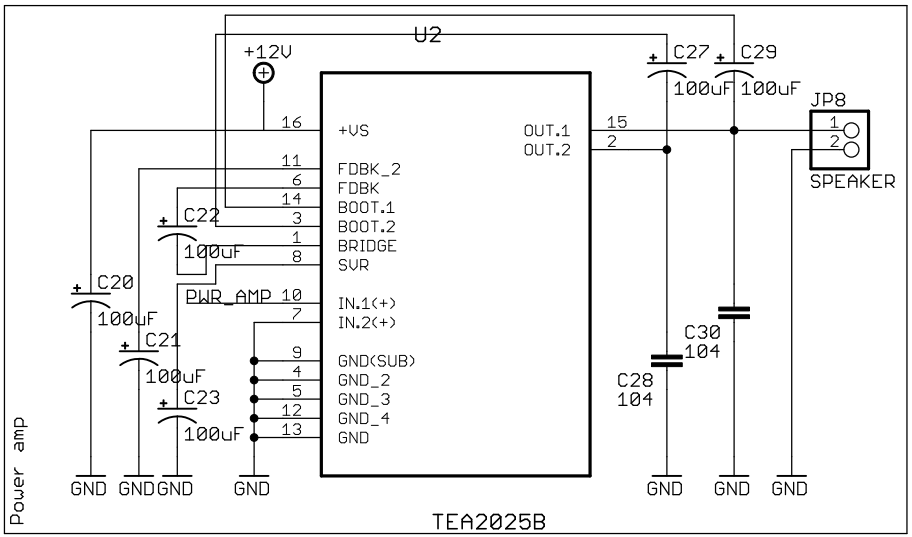

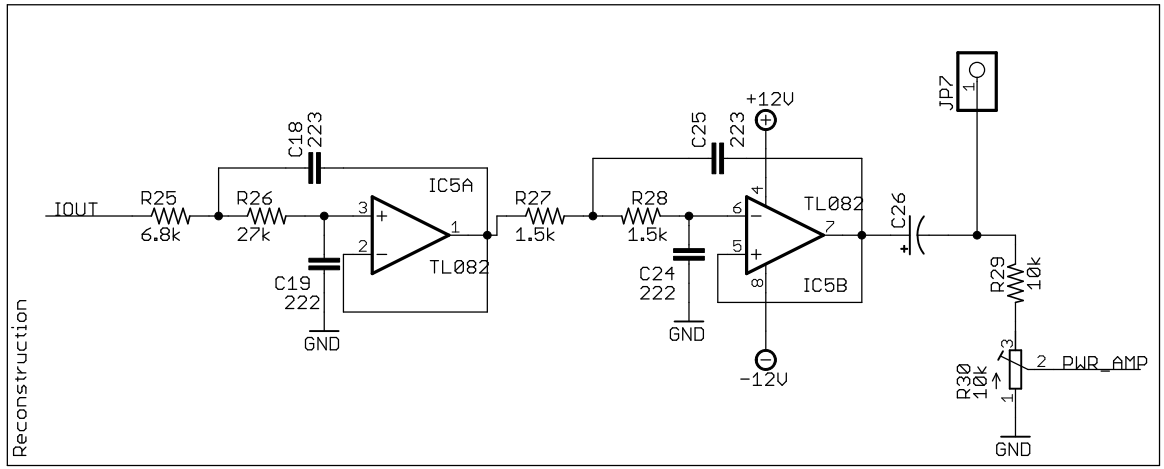

mmcaudio

03/11/2013 11:35:12

Sheet: 3/3