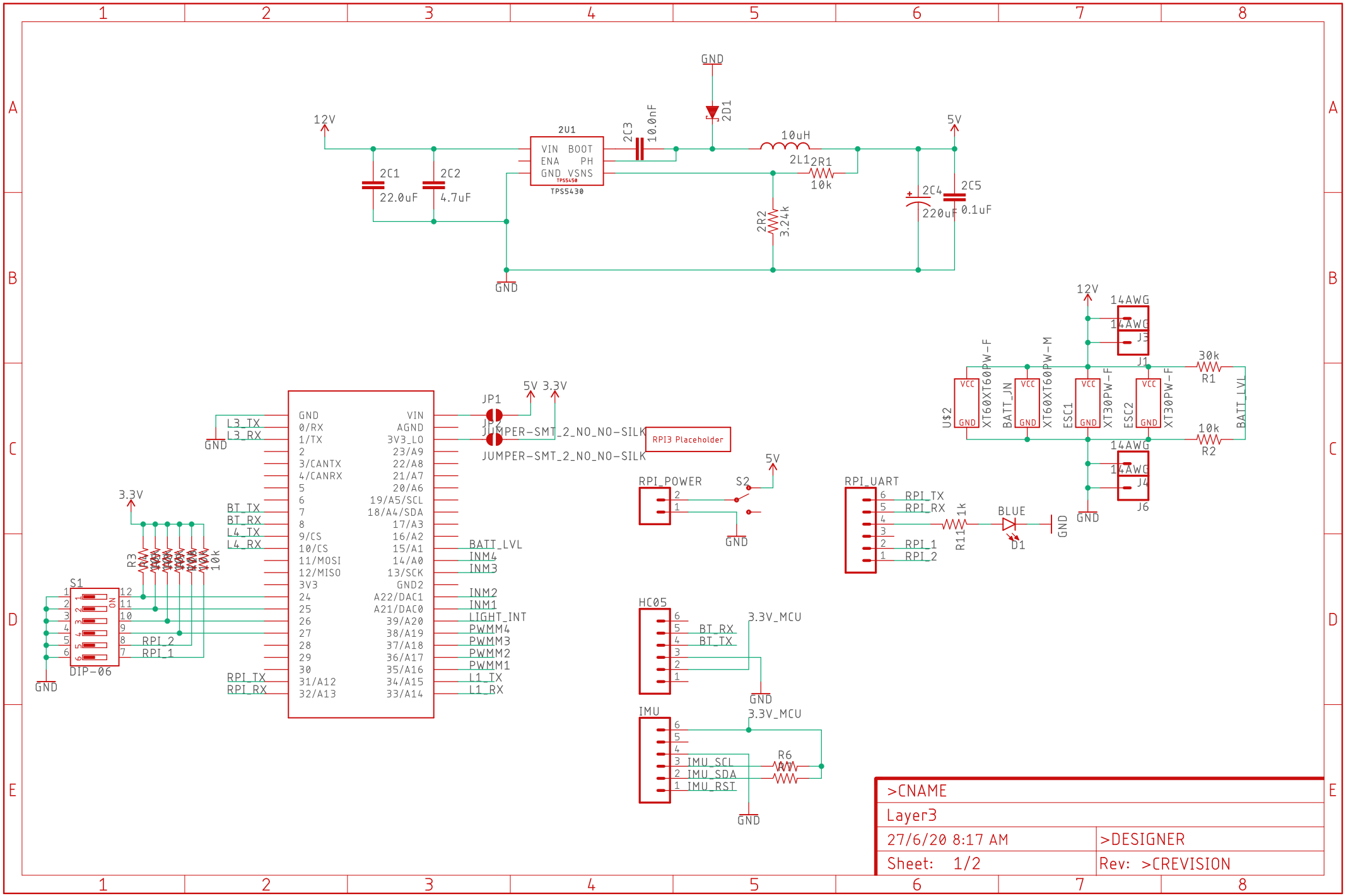

>CNAME	
Layer3	
27/6/20 8:17 AM	>DESIGNER
Sheet: 1/2	Rev: >CREVISION

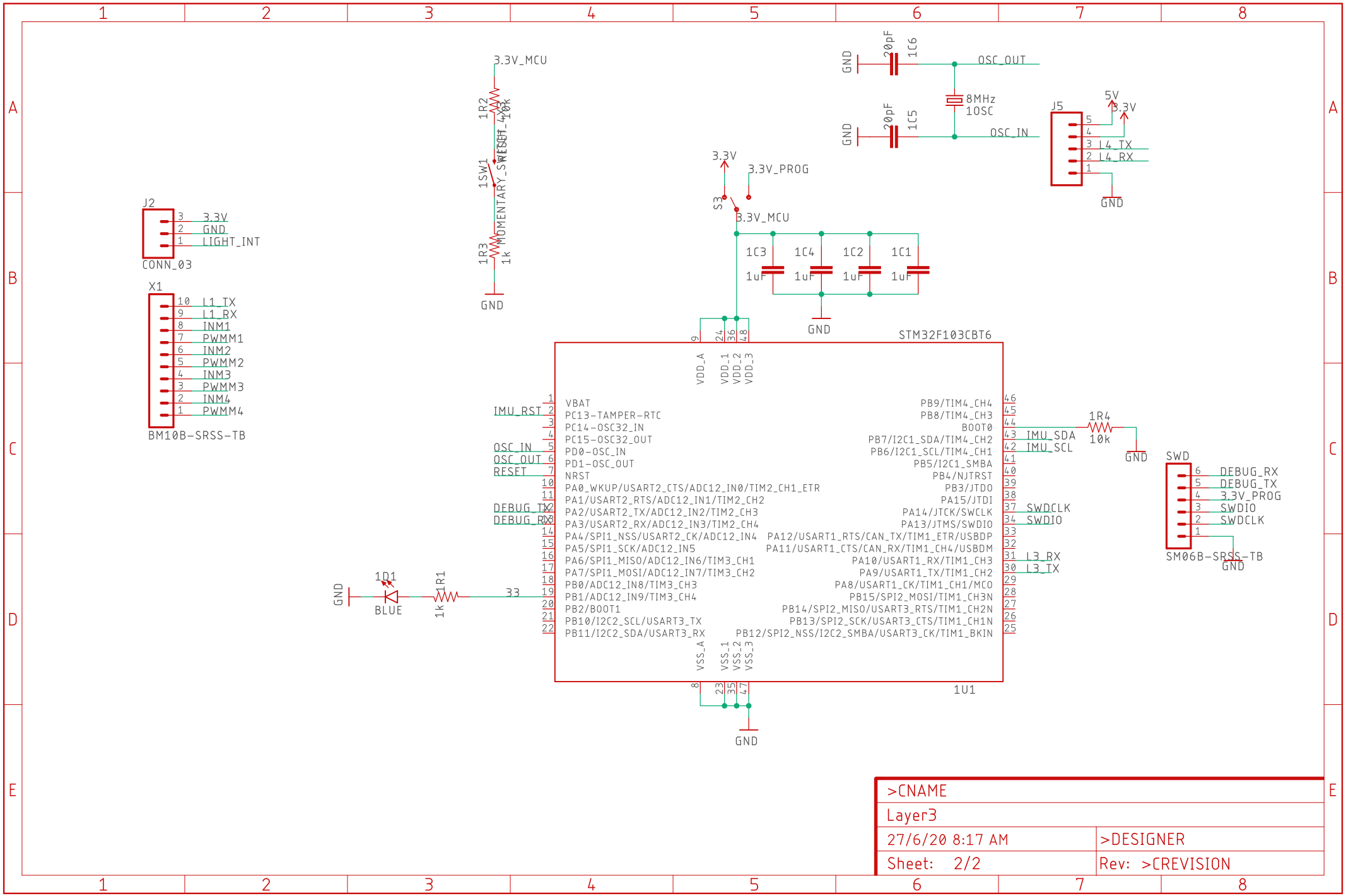

>CNAME	
Layer3	
27/6/20 8:17 AM	>DESIGNER
Sheet: 2/2	Rev: >CREVISION