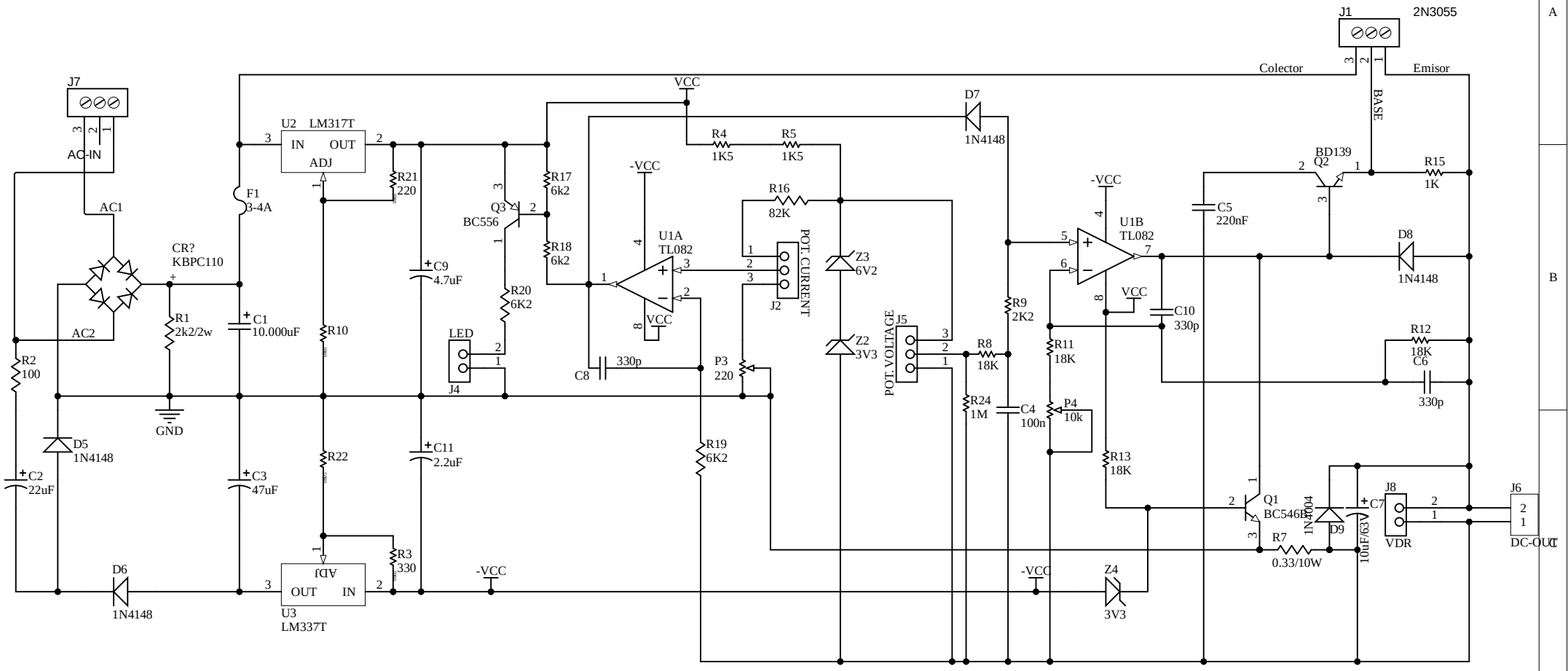

Title		
Size A4	Number	Revision
Date: 6/18/2023	Sheet of	
File: K:\Proyectos\..\Fuente 0-30V 0-2A.Sheet.Sch.Doc	Drawn By:	

89.5 (mm)
67.75 (mm)
POWER SUPPLY
0-30V 0-2A

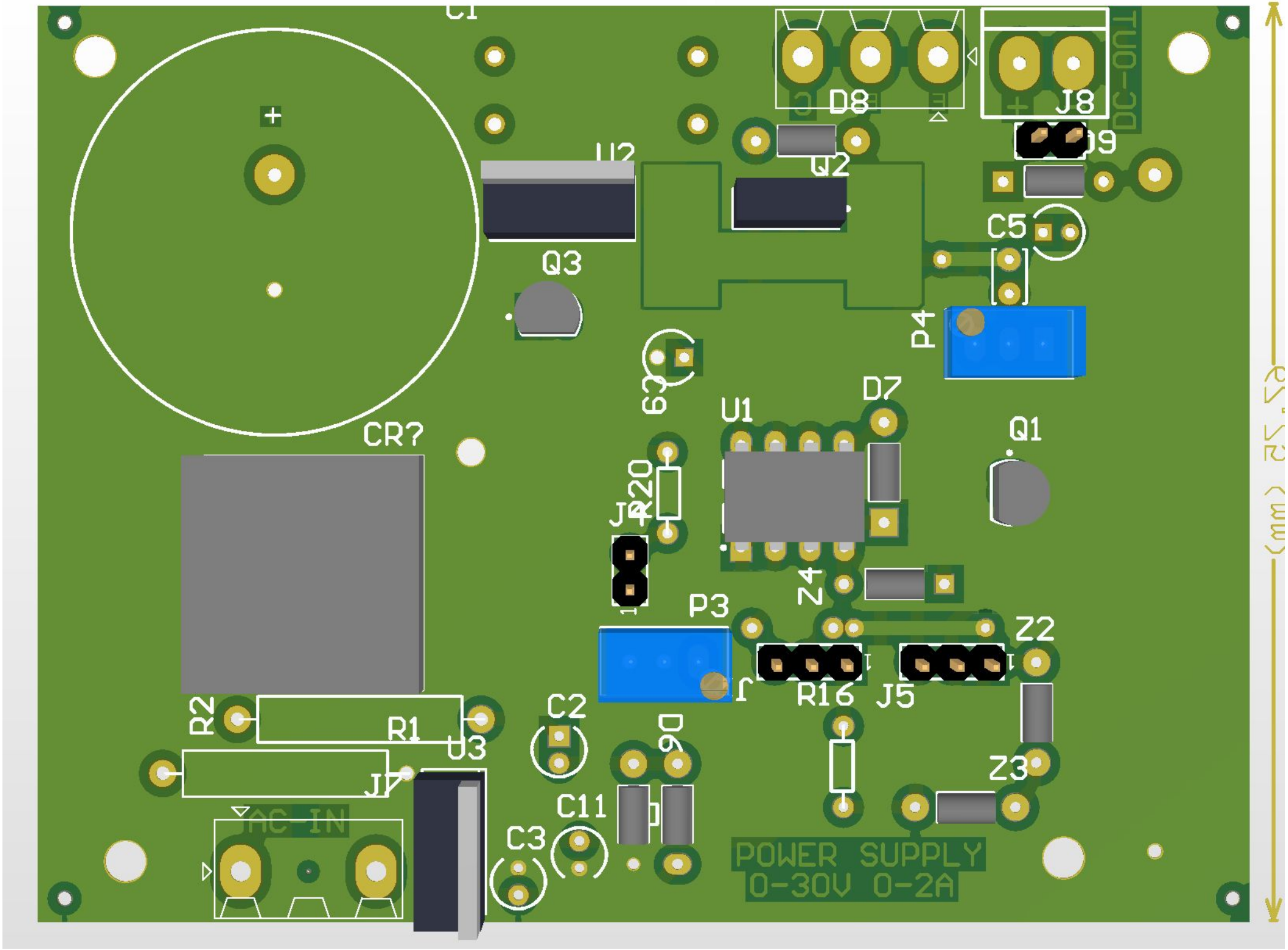
C1
D8
J8
J9
DC-OUT
U2
Q2
C5
Q3
P4
C6
U1
D7
Q1
CR?
R20
J4
P3
Z4
Z2
R16
J5
R2
R1
U3
C2
C9
J1
AC-IN
C11
C3
Z3
POWER SUPPLY
0-30V 0-2A
25.52 (mm)