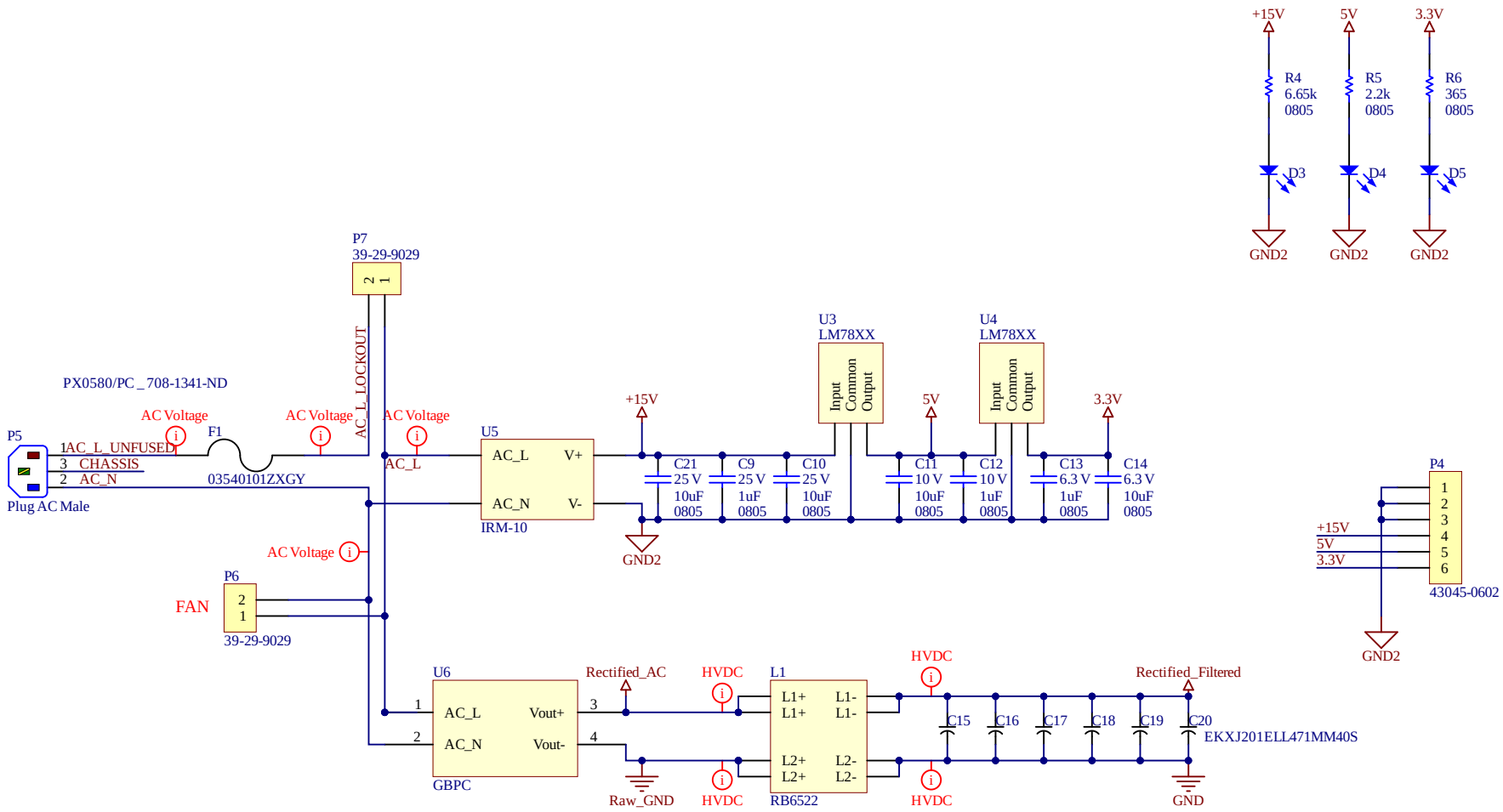

Title:	***Power Supply***
Project:	**EDM Power Supply**
Print:	5/1/2023
Drawn By:	Zachary Kilburn
Part Number:	Z1
Version:	0
File: PowerSupply.SchDoc	Size: A - Letter / Sheet 1 of 2

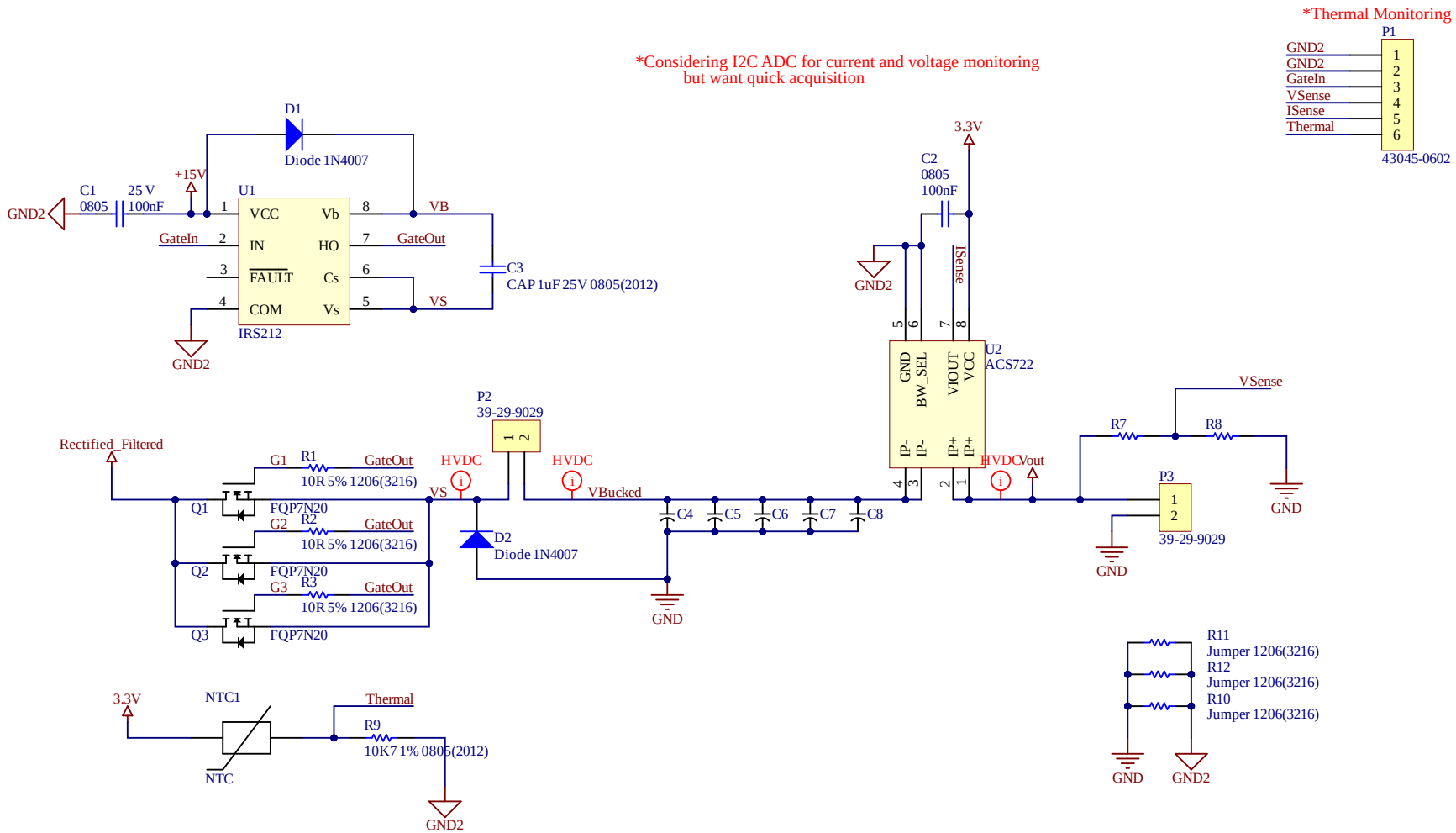

Title:	***Output Control***
Project:	**EDM Power Supply**
Print:	5/1/2023
Drawn By:	Zachary Kilburn
Part Number:	Z1
Version:	0
File: OutputControl.SchDoc	Size: A - Letter / Sheet 2 of 2

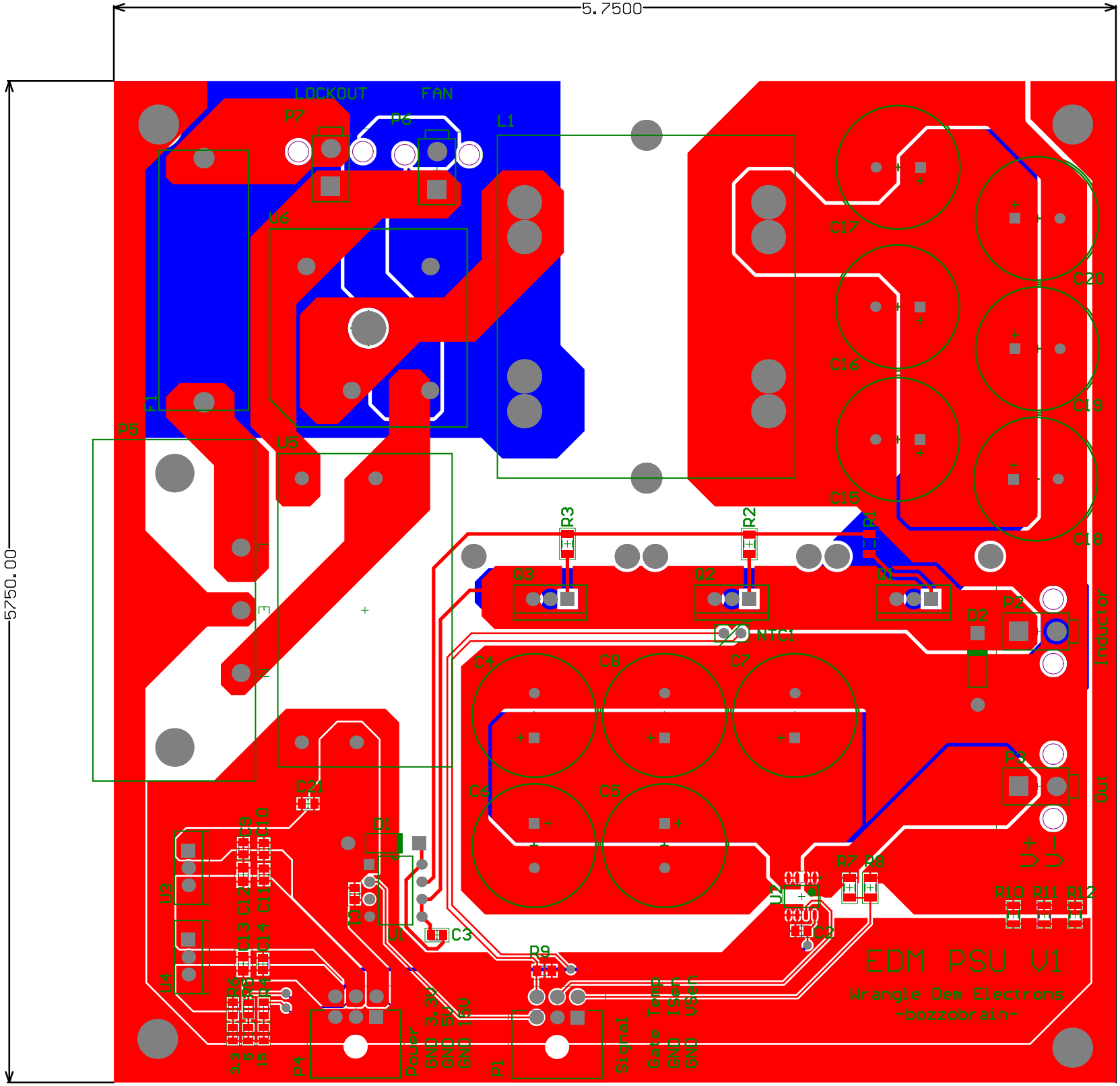
5.7500
5750.00
LOCKOUT
FAN
P7
P6
L1
U6
U5
P5
C1
C17
C20
C16
C19
C15
C18
R3
R2
R1
Q3
Q2
Q1
NTC1
P2
D2
Inductor
C4
C8
C7
C6
C5
P3
Out
C21
D1
U3
U1
C3
R9
R7
R8
U2
C2
R10
R11
R12
L4
P4
Power
3.3
GND
GND
GND
15V
P1
Signal
Gate
Temp
Isen
Vsen
GND
GND
EDM PSU V1
Wrangle Dem Electrons
-bozzobrain-