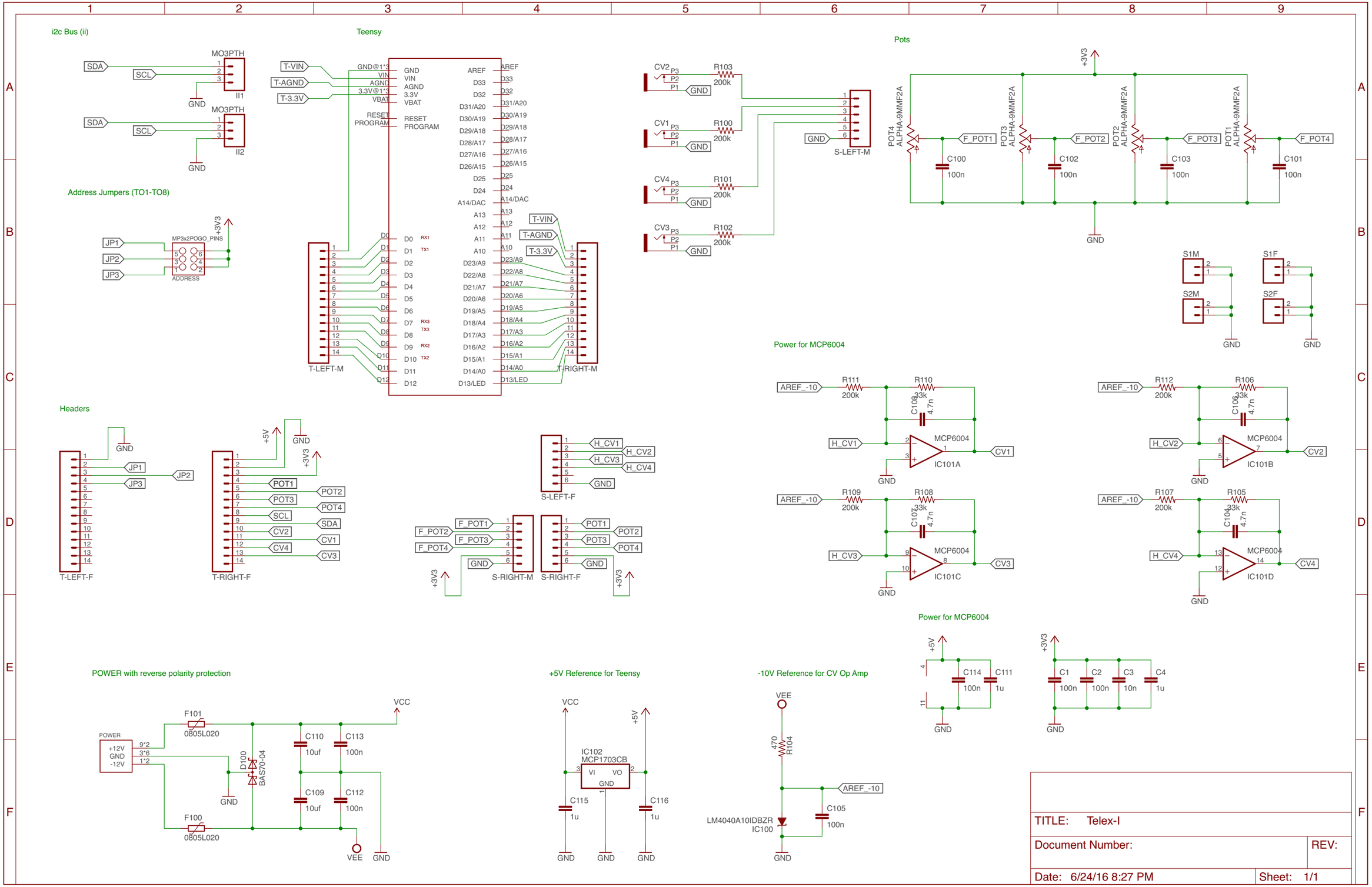
i2c Bus (ii)
Teensy
Pots
Address Jumpers (TO1-TO8)
Headers
Power for MCP6004
Power for MCP6004
POWER with reverse polarity protection
+5V Reference for Teensy
-10V Reference for CV Op Amp
TITLE: Telex-I
Document Number:
REV:
Date: 6/24/16 8:27 PM
Sheet: 1/1