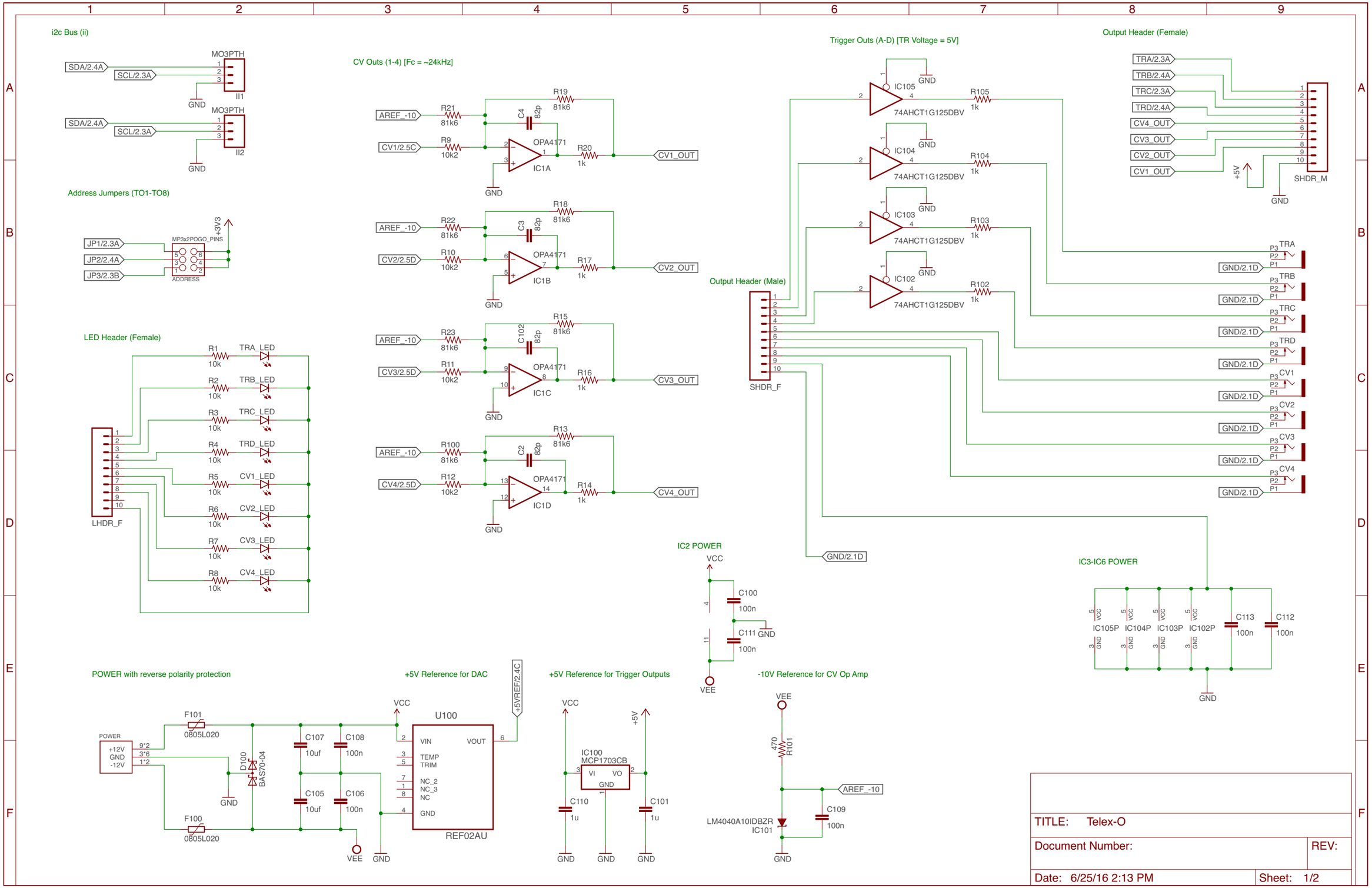
i2c Bus (ii)
SDA/2.4A
SCL/2.3A
MO3PTH
II1
II2
GND
Address Jumpers (TO1-TO8)
JP1/2.3A
JP2/2.4A
JP3/2.3B
MP3x2POGO_PINS
ADDRESS
+3V3
LED Header (Female)
LHDR_F
R1 10k TRA_LED
R2 10k TRB_LED
R3 10k TRC_LED
R4 10k TRD_LED
R5 10k CV1_LED
R6 10k CV2_LED
R7 10k CV3_LED
R8 10k CV4_LED
CV Outs (1-4) [Fc = ~24kHz]
AREF_-10
CV1/2.5C
CV2/2.5D
CV3/2.5D
CV4/2.5D
R21 81k6
R9 10k2
R19 81k6
C4 82p
OPA4171
IC1A
R20 1k
CV1_OUT
R22 81k6
R10 10k2
R18 81k6
C3 82p
IC1B
R17 1k
CV2_OUT
R23 81k6
R11 10k2
R15 81k6
C102 82p
IC1C
R16 1k
CV3_OUT
R100 81k6
R12 10k2
R13 81k6
C2 82p
IC1D
R14 1k
CV4_OUT
Trigger Outs (A-D) [TR Voltage = 5V]
IC105
IC104
IC103
IC102
74AHCT1G125DBV
R105 1k
R104 1k
R103 1k
R102 1k
Output Header (Male)
SHDR_F
GND/2.1D
Output Header (Female)
TRA/2.3A
TRB/2.4A
TRC/2.3A
TRD/2.4A
CV4_OUT
CV3_OUT
CV2_OUT
CV1_OUT
SHDR_M
+5V
TRA
TRB
TRC
TRD
CV1
CV2
CV3
CV4
P3
P2
P1
IC2 POWER
VCC
VEE
C100 100n
C111 100n
IC3-IC6 POWER
IC105P
IC104P
IC103P
IC102P
C113 100n
C112 100n
POWER with reverse polarity protection
POWER
+12V
GND
-12V
9*2
3*6
1*2
F101 0805L020
F100 0805L020
D100 BAS70-04
C107 10uf
C108 100n
C105 10uf
C106 100n
+5V Reference for DAC
U100
VIN
VOUT
TEMP
TRIM
NC_2
NC_3
NC
REF02AU
+5VREF/2.4C
+5V Reference for Trigger Outputs
IC100
MCP1703CB
VI
VO
C110 1u
C101 1u
-10V Reference for CV Op Amp
470 R101
LM4040A10IDBZR
IC101
C109 100n
TITLE: Telex-O
Document Number:
REV:
Date: 6/25/16 2:13 PM
Sheet: 1/2

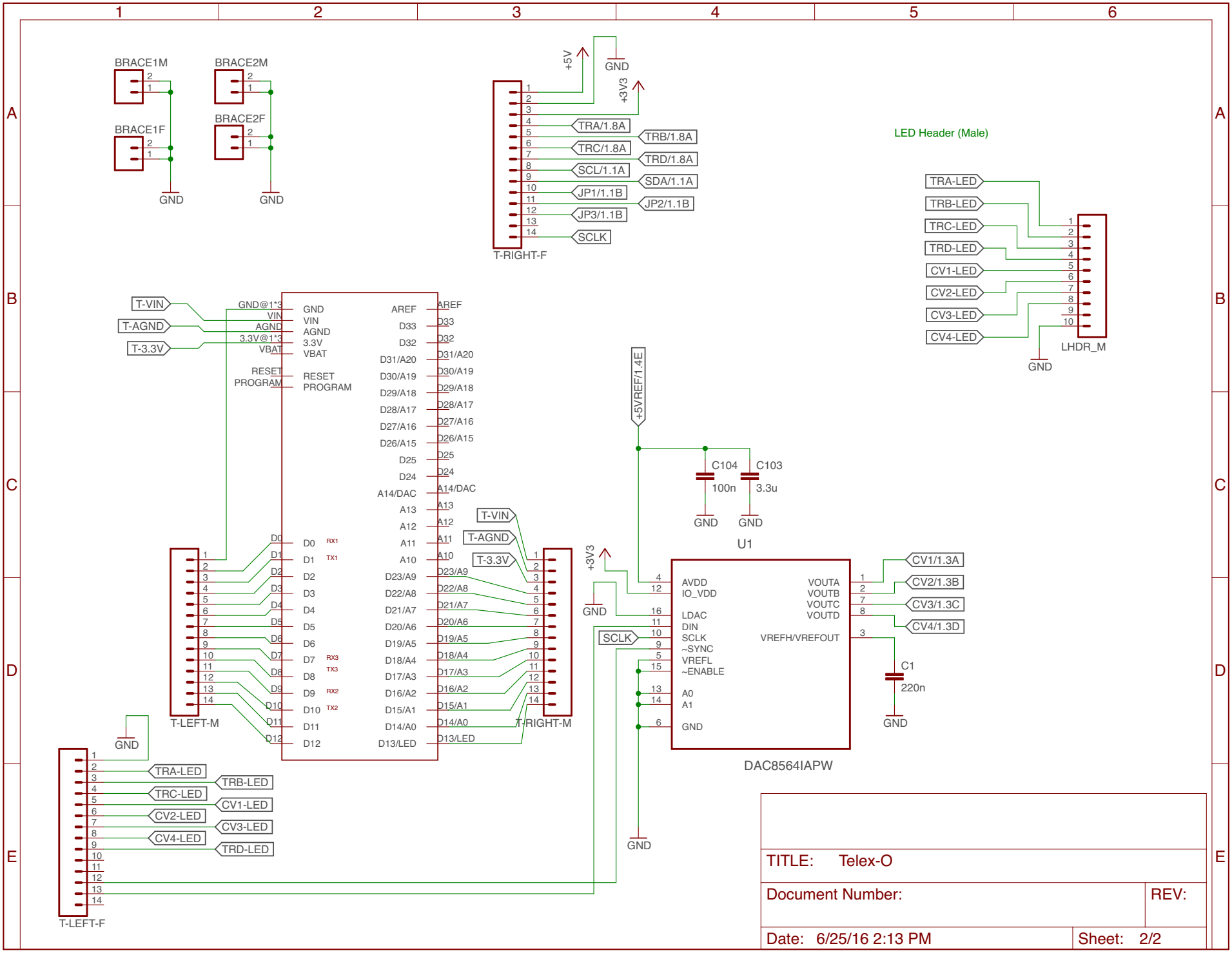
BRACE1M
BRACE2M
BRACE1F
BRACE2F
GND
+5V
+3V3
TRA/1.8A
TRB/1.8A
TRC/1.8A
TRD/1.8A
SCL/1.1A
SDA/1.1A
JP1/1.1B
JP2/1.1B
JP3/1.1B
SCLK
T-RIGHT-F
LED Header (Male)
TRA-LED
TRB-LED
TRC-LED
TRD-LED
CV1-LED
CV2-LED
CV3-LED
CV4-LED
LHDR_M
T-VIN
T-AGND
T-3.3V
GND@1*3
VIN
AGND
3.3V@1*3
VBAT
RESET
PROGRAM
AREF
D33
D32
D31/A20
D30/A19
D29/A18
D28/A17
D27/A16
D26/A15
D25
D24
A14/DAC
A13
A12
A11
A10
D23/A9
D22/A8
D21/A7
D20/A6
D19/A5
D18/A4
D17/A3
D16/A2
D15/A1
D14/A0
D13/LED
D0
D1
D2
D3
D4
D5
D6
D7
D8
D9
D10
D11
D12
RX1
TX1
RX3
TX3
RX2
TX2
T-LEFT-M
T-RIGHT-M
T-LEFT-F
+5VREF/1.4E
C104
100n
C103
3.3u
U1
AVDD
IO_VDD
LDAC
DIN
SCLK
~SYNC
VREFL
~ENABLE
A0
A1
VOUTA
VOUTB
VOUTC
VOUTD
VREFH/VREFOUT
CV1/1.3A
CV2/1.3B
CV3/1.3C
CV4/1.3D
C1
220n
DAC8564IAPW
TITLE: Telex-O
Document Number:
REV:
Date: 6/25/16 2:13 PM
Sheet: 2/2