Edit: This project was awarded 'Best Market Potential' across all sections of the Toy Design Course

Toy Design - Torchic

Group 12: Alex Goto, Ben Masters, Allen Yin, Lizzy Jensen

Torchic Market

- Pokémon is a world-wide phenomenon
- Mostly for Kids, Ages 3-12
  - Potentially for young adults if more polished
- Stimulating
  - Walks and Beak Moves
- Painted for realistic appearance

Walking

- Designed and verified with motion skeletons
- Prototyped fully operable version
- Held in place with slot in the body
- Inspired from popsicle stick ‘DIY’ article

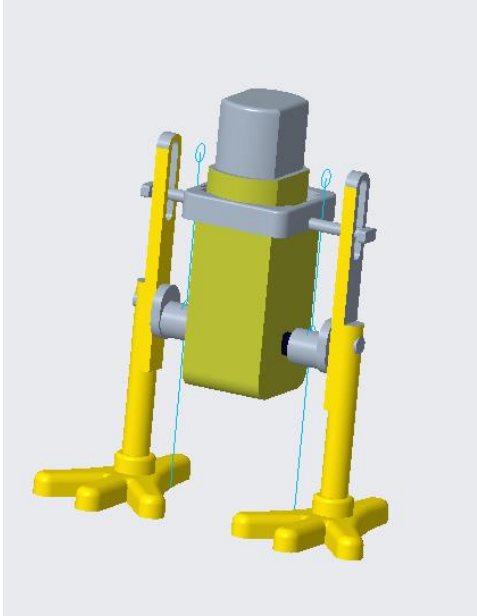

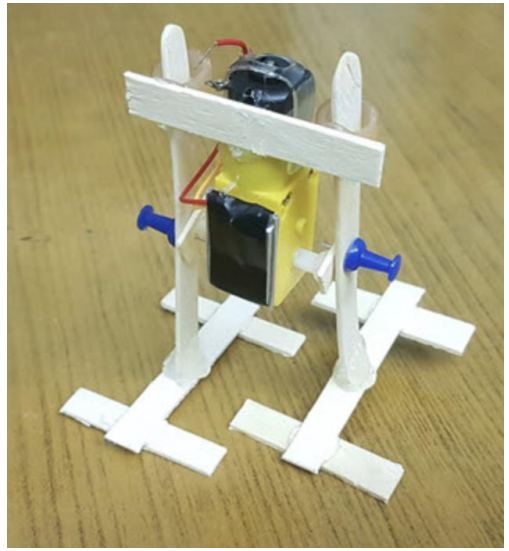

Beak

- Pear Cam and follower to open beak
- Motor with gearbox at 30 rpm
- Spring for return action to close beak

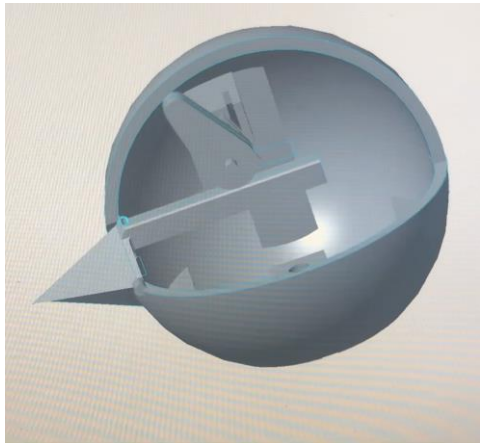

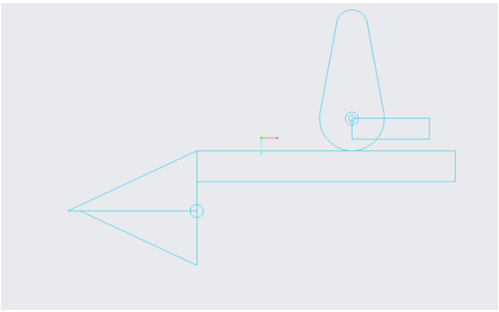

Electronic System

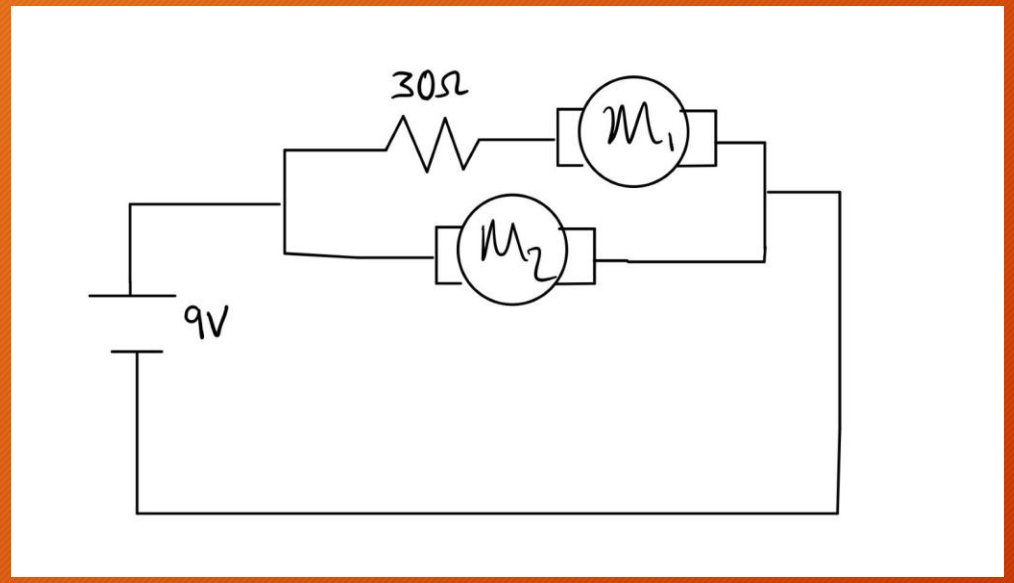

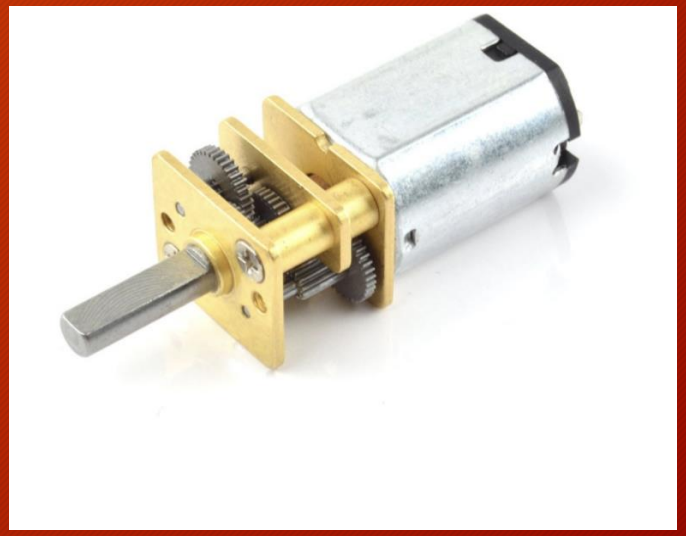

Prototyping Process

Conclusions

- Great durability
- Realistic appearance
- Improvements
  - Smoother mechanism operation
  - More secure connection between head and body