iRobot® Create® 2 Open Interface (OI) Specification based on the iRobot® Roomba® 600

Last Updated April 2, 2015

Table of Contents

Table of Contents 2
iRobot Roomba® Open Interface Overview 3
Physical Connections 3
  Roomba's External Serial Port Mini-DIN Connector Pinout 3
Serial Port Settings 4
Power Saving 4
Roomba Physical Dimensions 5
Roomba Open Interface Modes 5
Roomba Open Interface Command Reference 7
  Getting Started Commands 7
  Mode Commands 9
  Cleaning Commands 10
  Actuator Commands 12
  Input Commands 20
Roomba Open Interface Sensor Packets 22
  Characters sent by iRobot devices 25
Roomba Open Interface Sensors Quick Reference 36
Appendix: What's new in Create 2 39

iRobot Roomba® Open Interface Overview

The Roomba Open Interface (OI) is a software interface for controlling and manipulating Roomba's behavior. The software interface lets you manipulate Roomba's behavior and read its sensors through a series of commands, including mode commands, actuator commands, song commands, cleaning commands, and sensor commands that you send to the Roomba's serial port by way of a PC or microcontroller that is connected to the Mini-DIN connector.

Physical Connections

To use the OI, a processor capable of generating serial commands such as a PC or a microcontroller must be connected to the external Mini-DIN connector on Roomba. This connector provides two-way, serial communication at TTL (0 – 5V) levels. The connector also provides an unregulated direct connection to Roomba's battery, which you can use to power the OI applications. The Mini-DIN connector is located in the rear right side of Roomba, beneath a snap-away plastic guard.

Roomba's External Serial Port Mini-DIN Connector Pinout

This diagram shows the pinout of the top view of the female connector in Roomba. Note that pins 6 and 7 are towards the outside circumference of Roomba.

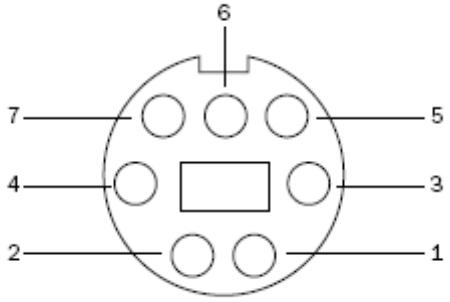

Pin	Name	Description
1	Vpwr	Roomba battery + (unregulated)
2	Vpwr	Roomba battery + (unregulated)
3	RXD	0 – 5V Serial input to Roomba
4	TXD	0 – 5V Serial output from Roomba
5	BRC	Baud Rate Change
6	GND	Roomba battery ground
7	GND	Roomba battery ground

Since the RXD and TXD pins use 0 – 5V logic voltage and the PC serial ports use different voltages (RS-232 levels), it is necessary to shift voltage levels. You will need to use a level shifting cable such as the iRobot Create USB cable.

Pins 1 and 2 (Vpwr) are connected to the Roomba battery through a 200 mA PTC resettable fuse. The continuous draw from these two pins together should not exceed 200 mA. Do not draw more than 500 mA peak from these pins, or the fuse will reset.

Serial Port Settings

Baud: 115200 or 19200 (see below)

Data bits: 8

Parity: None

Stop bits: 1

Flow control: None

By default, Roomba communicates at 115200 baud. If you are using a microcontroller that does not support 115200 baud, there are two ways to force Roomba to switch to 19200:

Method 1:

While powering off Roomba, continue to hold down the Clean/Power button after the light has turned off. After about 10 seconds, Roomba plays a tune of descending pitches. Roomba will communicate at 19200 baud until the processor loses battery power or the baud rate is explicitly changed by way of the OI.

Method 2:

Use the Baud Rate Change pin (pin 5 on the Mini-DIN connector) to change Roomba's baud rate. After turning on Roomba, wait 2 seconds and then pulse the Baud Rate Change low three times. Each pulse should last between 50 and 500 milliseconds. Roomba will communicate at 19200 baud until the processor loses battery power or the baud rate is explicitly changed by way of the OI.

Power Saving

In Passive mode, Roomba will sleep after 5 minutes of inactivity to preserve battery power. In Safe and Full modes, Roomba will never sleep, and if left in this state for an extended period of time, will deeply discharge its battery, even if plugged into the charger. The charger will power Roomba in all modes, but it will not charge the battery in Safe or Full mode. It is important that when you are finished working with Roomba that you issue either the Passive or Stop command to protect the battery.

Roomba Physical Dimensions

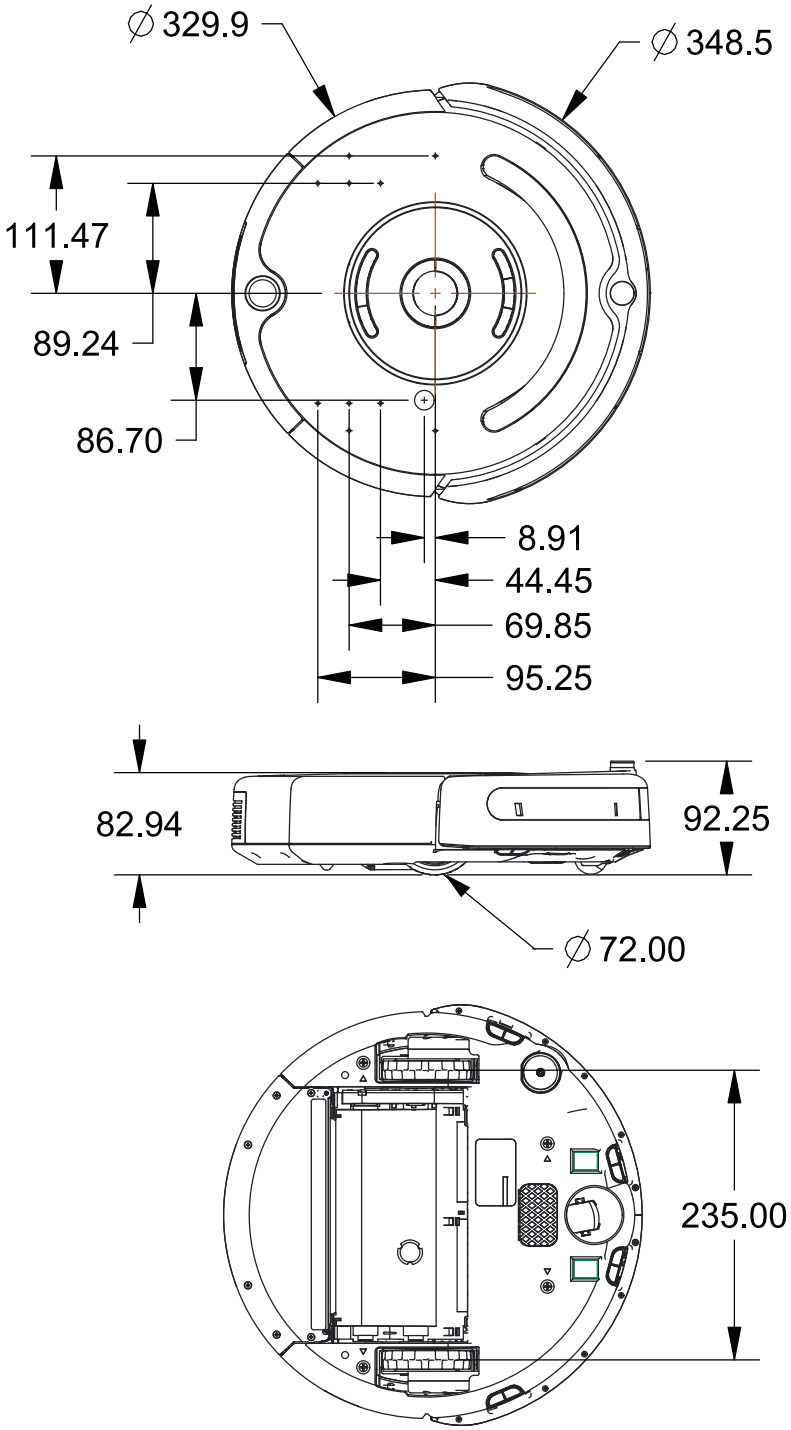

Robot Weight: ~3.5 kilograms
Encoder: 508.8 counts/revolution

Roomba Open Interface Modes

The Roomba OI has four operating modes: Off, Passive, Safe, and Full. After a battery change or when power is first turned on, the OI is in "off" mode. When it is off, the OI listens at the default baud rate (115200 or 19200 - see Serial Port Settings above) for an OI Start command. Once it receives the Start command, you can enter into any one of the four operating modes by sending a mode command to the OI. You can also switch between operating modes at any time by sending a command to the OI for the operating mode that you want to use.

Passive Mode

Upon sending the Start command or any one of the cleaning mode commands (e.g., Spot, Clean, Seek Dock), the OI enters into Passive mode. When the OI is in Passive mode, you can request and receive sensor data using any of the sensor commands, but you cannot change the current command parameters for the actuators (motors, speaker, lights, low side drivers, digital outputs) to something else. To change how one of the actuators operates, you must switch from Passive mode to Full mode or Safe mode.

While in Passive mode, you can read Roomba's sensors, watch Roomba perform a cleaning cycle, and charge the battery.

In Passive mode, Roomba will go into power saving mode to conserve battery power after five minutes of inactivity. To disable sleep, pulse the BRC pin low periodically before these five minutes expire. Each pulse resets this five minute counter. (One example that would not cause the baud rate to inadvertently change is to pulse the pin low for one second, every minute, but there are other periods and duty cycles that would work, as well.)

Safe Mode

When you send a Safe command to the OI, Roomba enters into Safe mode. Safe mode gives you full control of Roomba, with the exception of the following safety-related conditions:

- Detection of a cliff while moving forward (or moving backward with a small turning radius, less than one robot radius).
- Detection of a wheel drop (on any wheel).
- Charger plugged in and powered.

Should one of the above safety-related conditions occur while the OI is in Safe mode, Roomba stops all motors and reverts to the Passive mode.

If no commands are sent to the OI when in Safe mode, Roomba waits with all motors and LEDs off and does not respond to button presses or other sensor input.

Note that charging terminates when you enter Safe Mode, and Roomba will not power save.

Full Mode

When you send a Full command to the OI, Roomba enters into Full mode. Full mode gives you complete control over Roomba, all of its actuators, and all of the safety-related conditions that are restricted when the OI is in Safe mode, as Full mode shuts off the cliff, wheel-drop and internal charger safety features. To put the OI back into Safe mode, you must send the Safe command.

If no commands are sent to the OI when in Full mode, Roomba waits with all motors and LEDs off and does not respond to button presses or other sensor input.

Note that charging terminates when you enter Full Mode, and Roomba will not power save.

Roomba Open Interface Command Reference

The following is a list of all of Roomba's Open Interface commands. Each command starts with a one-byte opcode. Some of the commands must be followed by data bytes. All of Roomba's OI commands including their required data bytes are described below.

NOTE:

Always send the required number of data bytes for the command, otherwise, the processor will enter and remain in a "waiting" state until all of the required data bytes are received.

Getting Started Commands

The following commands start the Open Interface and get it ready for use.

Start	**Opcode: 128**	**Data Bytes: 0**

This command starts the OI. You must always send the Start command before sending any other commands to the OI.

- Serial sequence: [128].
- Available in modes: Passive, Safe, or Full
- Changes mode to: Passive. Roomba beeps once to acknowledge it is starting from "off" mode.

Reset	**Opcode: 7**	**Data Bytes: 0**

This command resets the robot, as if you had removed and reinserted the battery.

- Serial sequence: [7].
- Available in modes: Always available.
- Changes mode to: Off. You will have to send [128] again to re-enter Open Interface mode.

Stop	**Opcode: 173**	**Data Bytes: 0**

This command stops the OI. All streams will stop and the robot will no longer respond to commands. Use this command when you are finished working with the robot.

- Serial sequence: [173].
- Available in modes: Passive, Safe, or Full
- Changes mode to: Off. Roomba plays a song to acknowledge it is exiting the OI.

Baud | Opcode: 129 | Data Bytes: 1

This command sets the baud rate in bits per second (bps) at which OI commands and data are sent according to the baud code sent in the data byte. The default baud rate at power up is 115200 bps, but the starting baud rate can be changed to 19200 by following the method outlined on page 4. Once the baud rate is changed, it persists until Roomba is power cycled by pressing the power button or removing the battery, or when the battery voltage falls below the minimum required for processor operation. You must wait 100ms after sending this command before sending additional commands at the new baud rate.

- Serial sequence: [129][Baud Code]
- Available in modes: Passive, Safe, or Full
- Changes mode to: No Change
- Baud data byte 1: Baud Code (0 - 11)

Baud Code	Baud Rate in BPS
	3
1	6
2	12
3	24
4	48
5	96
6	144
7	192
8	288
9	384
1	576
11	1152

Mode Commands

Roomba has four operating modes: Off, Passive, Safe, and Full. Roomba powers on in the Off mode. The following commands change Roomba's OI mode.

Safe	**Opcode: 131**	**Data Bytes: 0**

This command puts the OI into Safe mode, enabling user control of Roomba. It turns off all LEDs. The OI can be in Passive, Safe, or Full mode to accept this command. If a safety condition occurs (see above) Roomba reverts automatically to Passive mode.

- Serial sequence: [131]
- Available in modes: Passive, Safe, or Full
- Changes mode to: Safe

Note: The effect and usage of the Control command (130) are identical to the Safe command (131).

Full	**Opcode: 132**	**Data Bytes: 0**

This command gives you complete control over Roomba by putting the OI into Full mode, and turning off the cliff, wheel-drop and internal charger safety features. That is, in Full mode, Roomba executes any command that you send it, even if the internal charger is plugged in, or command triggers a cliff or wheel drop condition.

- Serial sequence: [132]
- Available in modes: Passive, Safe, or Full
- Changes mode to: Full

Note: Use the Start command (128) to change the mode to Passive.

Cleaning Commands

The following are commands to start Roomba's built-in cleaning modes and set the clock and schedule.

Clean **Opcode: 135** **Data Bytes: 0**

This command starts the default cleaning mode. This is the same as pressing Roomba's Clean button, and will pause a cleaning cycle if one is already in progress.

- Serial sequence: [135]
- Available in modes: Passive, Safe, or Full
- Changes mode to: Passive

Max **Opcode: 136** **Data Bytes: 0**

This command starts the Max cleaning mode, which will clean until the battery is dead. This command will pause a cleaning cycle if one is already in progress.

- Serial sequence: [136]
- Available in modes: Passive, Safe, or Full
- Changes mode to: Passive

Spot **Opcode: 134** **Data Bytes: 0**

This command starts the Spot cleaning mode. This is the same as pressing Roomba's Spot button, and will pause a cleaning cycle if one is already in progress.

- Serial sequence: [134]
- Available in modes: Passive, Safe, or Full
- Changes mode to: Passive

Seek Dock **Opcode: 143** **Data Bytes: 0**

This command directs Roomba to drive onto the dock the next time it encounters the docking beams. This is the same as pressing Roomba's Dock button, and will pause a cleaning cycle if one is already in progress.

- Serial sequence: [143]
- Available in modes: Passive, Safe, or Full
- Changes mode to: Passive

Power **Opcode: 133** **Data Bytes: 0**

This command powers down Roomba. The OI can be in Passive, Safe, or Full mode to accept this command.

- Serial sequence: [133]
- Available in modes: Passive, Safe, or Full
- Changes mode to: Passive

Schedule — Opcode: 167 — Data Bytes: 15

This command sends Roomba a new schedule. To disable scheduled cleaning, send all 0s.

- Serial sequence: [167] [Days] [Sun Hour] [Sun Minute] [Mon Hour] [Mon Minute] [Tue Hour] [Tue Minute] [Wed Hour] [Wed Minute] [Thu Hour] [Thu Minute] [Fri Hour] [Fri Minute] [Sat Hour] [Sat Minute]
- Available in modes: Passive, Safe, or Full.
- If Roomba's schedule or clock button is pressed, this command will be ignored.
- Changes mode to: No change
- Times are sent in 24 hour format. Hour (0-23) Minute (0-59)

Days

Bit	7	6	5	4	3	2	1	
Value	Reserved	Sat	Fri	Thu	Wed	Tue	Mon	Sun

Example:
To schedule the robot to clean at 3:00 PM on Wednesdays and 10:36 AM on Fridays, send: [167] [40] [0] [0] [0] [0] [0] [0] [15] [0] [0] [0] [10] [36] [0] [0]

To disable scheduled cleaning, send: [167] [0] [0] [0] [0] [0] [0] [0] [0] [0] [0] [0] [0] [0] [0] [0]

Set Day/Time — Opcode: 168 — Data Bytes: 3

This command sets Roomba's clock.

- Serial sequence: [168] [Day] [Hour] [Minute]
- Available in modes: Passive, Safe, or Full.
- If Roomba's schedule or clock button is pressed, this command will be ignored.
- Changes mode to: No change
- Time is sent in 24 hour format. Hour (0-23) Minute (0-59)

Code	Day
0	Sunday
1	Monday
2	Tuesday
3	Wednesday
4	Thursday
5	Friday
6	Saturday

Actuator Commands

The following commands control Roomba's actuators: wheels, brushes, vacuum, speaker, LEDS, and buttons.

Drive **Opcode: 137** **Data Bytes: 4**

This command controls Roomba's drive wheels. It takes four data bytes, interpreted as two 16-bit signed values using two's complement. (http://en.wikipedia.org/wiki/Two%27s_complement) The first two bytes specify the average velocity of the drive wheels in millimeters per second (mm/s), with the high byte being sent first. The next two bytes specify the radius in millimeters at which Roomba will turn. The longer radii make Roomba drive straighter, while the shorter radii make Roomba turn more. The radius is measured from the center of the turning circle to the center of Roomba. A Drive command with a positive velocity and a positive radius makes Roomba drive forward while turning toward the left. A negative radius makes Roomba turn toward the right. Special cases for the radius make Roomba turn in place or drive straight, as specified below. A negative velocity makes Roomba drive backward.

NOTE:

Internal and environmental restrictions may prevent Roomba from accurately carrying out some drive commands. For example, it may not be possible for Roomba to drive at full speed in an arc with a large radius of curvature.

- Serial sequence: [137] [Velocity high byte] [Velocity low byte] [Radius high byte] [Radius low byte]
- Available in modes: Safe or Full
- Changes mode to: No Change
- Velocity (-500 – 500 mm/s)
- Radius (-2000 – 2000 mm)

  Special cases:

  Straight = 32768 or 32767 = 0x8000 or 0x7FFF

  Turn in place clockwise = -1 = 0xFFFF

  Turn in place counter-clockwise = 1 = 0x0001

Example:

To drive in reverse at a velocity of -200 mm/s while turning at a radius of 500mm, send the following serial byte sequence:

[137] [255] [56] [1] [244]

Explanation:

Desired value → two's complement and convert to hex → split into 2 bytes → convert to decimal

Velocity = -200 = 0xFF38 = [0xFF] [0x38] = [255] [56]

Radius = 500 = 0x01F4 = [0x01] [0xF4] = [1] [244]

Drive Direct **Opcode: 145** **Data Bytes: 4**

This command lets you control the forward and backward motion of Roomba's drive wheels independently. It takes four data bytes, which are interpreted as two 16-bit signed values using two's complement. The first two bytes specify the velocity of the right wheel in millimeters per second (mm/s), with the high byte sent first. The next two bytes specify the velocity of the left wheel, in the same format. A positive velocity makes that wheel drive forward, while a negative velocity makes it drive backward.

- Serial sequence: [145] [Right velocity high byte] [Right velocity low byte] [Left velocity high byte] [Left velocity low byte]
- Available in modes: Safe or Full
- Changes mode to: No Change
- Right wheel velocity (-500 – 500 mm/s)
- Left wheel velocity (-500 – 500 mm/s)

Drive PWM **Opcode: 146** **Data Bytes: 4**

This command lets you control the raw forward and backward motion of Roomba's drive wheels independently. It takes four data bytes, which are interpreted as two 16-bit signed values using two's complement. The first two bytes specify the PWM of the right wheel, with the high byte sent first. The next two bytes specify the PWM of the left wheel, in the same format. A positive PWM makes that wheel drive forward, while a negative PWM makes it drive backward.

- Serial sequence: [146] [Right PWM high byte] [Right PWM low byte] [Left PWM high byte] [Left PWM low byte]
- Available in modes: Safe or Full
- Changes mode to: No Change
- Right wheel PWM (-255 – 255)
- Left wheel PWM (-255 – 255)

Motors — Opcode: 138 — Data Bytes: 1

This command lets you control the forward and backward motion of Roomba's main brush, side brush, and vacuum independently. Motor velocity cannot be controlled with this command, all motors will run at maximum speed when enabled. The main brush and side brush can be run in either direction. The vacuum only runs forward.

Serial sequence: [138] [Motors]

- Available in modes: Safe or Full
- Changes mode to: No Change
- Bits 0-2: 0 = off, 1 = on at 100% pwm duty cycle
- Bits 3 & 4: 0 = motor's default direction, 1 = motor's opposite direction. Default direction for the side brush is counterclockwise. Default direction for the main brush/flapper is inward.

Bit	7	6	5	4	3	2	1	
Value	Reserved			Main Brush Direction	Side Brush Clock-wise?	Main Brush	Vacuum	Side Brush

Example:

To turn on the main brush inward and the side brush clockwise, send: [138] [13]

PWM Motors — Opcode: 144 — Data Bytes: 3

This command lets you control the speed of Roomba's main brush, side brush, and vacuum independently. With each data byte, you specify the duty cycle for the low side driver (max 128). For example, if you want to control a motor with 25% of battery voltage, choose a duty cycle of 128 * 25% = 32. The main brush and side brush can be run in either direction. The vacuum only runs forward. Positive speeds turn the motor in its default (cleaning) direction. Default direction for the side brush is counterclockwise. Default direction for the main brush/flapper is inward.

Serial sequence: [144] [Main Brush PWM] [Side Brush PWM] [Vacuum PWM]

- Available in modes: Safe or Full
- Changes mode to: No Change
- Main Brush and Side Brush duty cycle (-127 – 127)
- Vacuum duty cycle (0 – 127)

LEDs — Opcode: 139 — Data Bytes: 3

This command controls the LEDs common to all models of Roomba 600. The power LED is specified by two data bytes: one for the color and the other for the intensity.

- Serial sequence: [139] [LED Bits] [Power Color] [Power Intensity]
- Available in modes: Safe or Full
- Changes mode to: No Change
- LED Bits (0 – 255)

Home and Spot use green LEDs: 0 = off, 1 = on
Check Robot uses an orange LED.
Debris uses a blue LED.
Power uses a bicolor (red/green) LED. The intensity and color of this LED can be controlled with 8-bit resolution.

LED Bits (0-255)

Bit	7	6	5	4	3	2	1	
Value	Reserved				Check Robot	Dock	Spot	Debris

Power LED Color (0 – 255)

0 = green, 255 = red. Intermediate values are intermediate colors (orange, yellow, etc).

Power LED Intensity (0 – 255)

0 = off, 255 = full intensity. Intermediate values are intermediate intensities.

Example:

To turn on the Home LED and light the Power LED green at half intensity, send the serial byte sequence [139] [4] [0] [128].

Scheduling LEDS — Opcode: 162 — Data Bytes: 2

This command controls the state of the scheduling LEDs present on the Roomba 560 and 570.

- Serial sequence: [162] [Weekday LED Bits][Scheduling LED Bits]
- Available in modes: Safe or Full
- Changes mode to: No Change
- Weekday LED Bits (0 – 255)
- Scheduling LED Bits (0 – 255)
- All use red LEDs: 0 = off, 1 = on

Weekday LED Bits

Bit	7	6	5	4	3	2	1	
Value	Reserved	Sat	Fri	Thu	Wed	Tue	Mon	Sun

Scheduling LED Bits

Bit	7	6	5	4	3	2	1	
Value	Reserved			Schedule	Clock	AM	PM	Colon (:)

Digit LEDs Raw — Opcode: 163 — Data Bytes: 4

This command controls the four 7 segment displays on the Roomba 560 and 570.

- Serial sequence: [163] [Digit 3 Bits] [Digit 2 Bits] [Digit 1 Bits] [Digit 0 Bits]
- Available in modes: Safe or Full
- Changes mode to: No Change
- Digit N Bits (0 – 255)
- All use red LEDs: 0 = off, 1 = on. Digits are ordered from left to right on the robot 3,2,1,0.

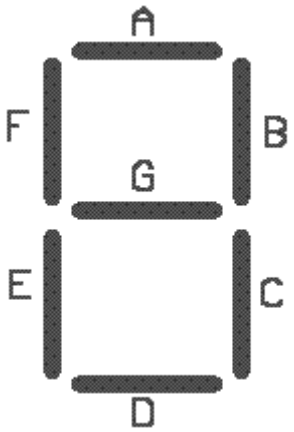

Digit N Bits

Bit	7	6	5	4	3	2	1	
Value	Reserved	G	F	E	D	C	B	A

Buttons — Opcode: 165 — Data Bytes: 1

This command lets you push Roomba's buttons. The buttons will automatically release after 1/6th of a second.

- Serial sequence: [165] [Buttons]
- Available in modes: Passive, Safe, or Full
- Changes mode to: No Change
- Buttons (0-255) 1 = Push Button, 0 = Release Button

Buttons

Bit	7	6	5	4	3	2	1	
Value	Clock	Schedule	Day	Hour	Minute	Dock	Spot	Clean

Digit LEDs ASCII — Opcode: 164 — Data Bytes: 4

This command controls the four 7 segment displays on the Roomba 560 and 570 using ASCII character codes. Because a 7 segment display is not sufficient to display alphabetic characters properly, all characters are an approximation, and not all ASCII codes are implemented.

- Serial sequence: [164] [Digit 3 ASCII] [Digit 2 ASCII] [Digit 1 ASCII] [Digit 0 ASCII]
- Available in modes: Safe or Full
- Changes mode to: No Change
- Digit N ASCII (32 – 126)
- All use red LEDs. Digits are ordered from left to right on the robot 3,2,1,0.

Example:

To write ABCD to the display, send the serial byte sequence: [164] [65] [66] [67] [68]

Table of ASCII codes:

Code	Display	Code	Display	Code	Display	Code	Display
32		53	5	7 , 1 2	F	86, 118	V
33	!	54	6	71, 1 3	G	87, 119	W
34	”	55	7	72, 1 4	H	88, 12	X
35	#	56	8	73, 1 5	I	89, 121	Y
37	%	57	9	74, 1 6	J	9 , 122	Z
38	&	58	:	75, 1 7	K	91, 4	[
39	’	59	;	76, 1 8	L	92	\
44	,	6	¡	77, 1 9	M	93, 41	]
45	-	61	=	78, 11	N	94	∧
46	.	62	¿	79, 111	O	95	_
47	/	63	?	8 , 112	P	96	‘
48		65, 97	A	81, 113	Q	123	{
49	1	66, 98	B	82, 114	R	124	—
5	2	67, 99	C	83, 36, 115	S	125	}
51	3	68, 1	D	84, 116	T	126	
52	4	69, 1 1	E	85, 117	U		

Song **Opcode: 140** **Data Bytes: 2N+2,** where **N** is the number of notes in the song

This command lets you specify up to four songs to the OI that you can play at a later time. Each song is associated with a song number. The Play command uses the song number to identify your song selection. Each song can contain up to sixteen notes. Each note is associated with a note number that uses MIDI note definitions and a duration that is specified in fractions of a second. The number of data bytes varies, depending on the length of the song specified. A one note song is specified by four data bytes. For each additional note within a song, add two data bytes.

- Serial sequence: [140] [Song Number] [Song Length] [Note Number 1] [Note Duration 1] [Note Number 2] [Note Duration 2], etc.
- Available in modes: Passive, Safe, or Full
- Changes mode to: No Change
- Song Number (0 – 4)

  The song number associated with the specific song. If you send a second Song command, using the same song number, the old song is overwritten.
- Song Length (1 – 16)

  The length of the song, according to the number of musical notes within the song.
- Song data bytes 3, 5, 7, etc.: Note Number (31 – 127)

  The pitch of the musical note Roomba will play, according to the MIDI note numbering scheme. The lowest musical note that Roomba will play is Note #31. Roomba considers all musical notes outside the range of 31 – 127 as rest notes, and will make no sound during the duration of those notes.
- Song data bytes 4, 6, 8, etc.: Note Duration (0 – 255)

  The duration of a musical note, in increments of $1/64^{th}$ of a second. Example: a half-second long musical note has a duration value of 32.

Number	Note	Frequency	Number	Note	Frequency	Number	Note	Frequency
31	G	49.	58	A#	233.1	85	C#	11 8.8
32	G#	51.9	59	B	246.9	86	D	1174.7
33	A	55.	6	C	261.6	87	D#	1244.5
34	A#	58.3	61	C#	277.2	88	E	1318.5
35	B	61.7	62	D	293.7	89	F	1396.9
36	C	65.4	63	D#	311.1	9	F#	148 .
37	C#	69.3	64	E	329.6	91	G	1568.
38	D	73.4	65	F	349.2	92	G#	1661.3
39	D#	77.8	66	F#	37 .	93	A	176 .
4	E	82.4	67	G	392.	94	A#	1864.7
41	F	87.3	68	G#	415.3	95	B	1975.6
42	F#	92.5	69	A	44 .	96	C	2 93.1
43	G	98.	7	A#	466.2	97	C#	2217.5
44	G#	1 3.8	71	B	493.9	98	D	2349.4
45	A	11 .	72	C	523.3	99	D#	2489.1
46	A#	116.5	73	C#	554.4	1	E	2637.1
47	B	123.5	74	D	587.3	1 1	F	2793.9
48	C	13 .8	75	D#	622.3	1 2	F#	296 .
49	C#	138.6	76	E	659.3	1 3	G	3136.
5	D	146.8	77	F	698.5	1 4	G#	3322.5
51	D#	155.6	78	F#	74 .	1 5	A	352 .1
52	E	164.8	79	G	784.	1 6	A#	3729.4
53	F	174.6	8	G#	83 .6	1 7	B	3951.2
54	F#	185.	81	A	88 .			
55	G	196.	82	A#	932.4			
56	G#	2 7.7	83	B	987.8			
57	A	22 .	84	C	1 46.5			

Play — Opcode: 141 — Data Bytes: 1

This command lets you select a song to play from the songs added to Roomba using the Song command. You must add one or more songs to Roomba using the Song command in order for the Play command to work.

- Serial sequence: [141] [Song Number]
- Available in modes: Safe or Full
- Changes mode to: No Change
- Song Number (0 – 4)

The number of the song Roomba is to play.

Input Commands

The following commands let you read the state of Roomba's built-in sensors, digital and analog inputs, and some internal state variables. Roomba updates these values internally every 15 ms. Do not send these commands more frequently than that.

Sensors **Opcode: 142** **Data Bytes: 1**

This command requests the OI to send a packet of sensor data bytes. There are 58 different sensor data packets. Each provides a value of a specific sensor or group of sensors.

For more information on sensor packets, refer to the next section, "*Roomba Open Interface Sensors Packets*".

- Serial sequence: [142] [Packet ID]
- Available in modes: Passive, Safe, or Full
- Changes mode to: No Change

  Identifies which of the 58 sensor data packets should be sent back by the OI. A value of 6 indicates a packet with all of the sensor data. Values of 0 through 5 indicate specific subgroups of the sensor data.

Query List **Opcode: 149** **Data Bytes: N + 1,** where **N** is the number of packets requested.

This command lets you ask for a list of sensor packets. The result is returned once, as in the Sensors command. The robot returns the packets in the order you specify.

- Serial sequence: [149][Number of Packets][Packet ID 1][Packet ID 2]...[Packet ID N]
- Available in modes: Passive, Safe, or Full
- Changes modes to: No Change

Example:

To get the state of the bumpers and the virtual wall sensor, send the following sequence:

[149] [2] [7] [13]

Stream **Opcode: 148** **Data Bytes: N + 1,** where **N** is the number of packets requested.

This command starts a stream of data packets. The list of packets requested is sent every 15 ms, which is the rate Roomba uses to update data.

This method of requesting sensor data is best if you are controlling Roomba over a wireless network (which has poor real-time characteristics) with software running on a desktop computer.

- Serial sequence: [148] [Number of packets] [Packet ID 1] [Packet ID 2] [Packet ID 3] etc.
- Available in modes: Passive, Safe, or Full
- Changes mode to: No Change

The format of the data returned is:

[19][N-bytes][Packet ID 1][Packet 1 data…][Packet ID 2][Packet 2 data…][Checksum]

N-bytes is the number of bytes between the n-bytes byte and the checksum.

The checksum is a 1-byte value. It is the 8-bit complement of all of the bytes in the packet, excluding the checksum itself. That is, if you add all of the bytes in the packet, including the checksum, the low byte of the result will be 0.

Example:

To get data from Roomba's left cliff signal (packet 29) and virtual wall sensor (packet 13), send the following command string to Roomba:

[148] [2] [29] [13]

NOTE:

The left cliff signal is a 2-byte packet and the virtual wall is a 1-byte packet.

Roomba starts streaming data that looks like this:

19	5	29	2 25	13	0	163
header	n-bytes	packet ID 1	Packet data 1 (2 bytes)	packet ID 2	packet data 2 (1 byte)	Checksum

NOTE:

Checksum computation: (19 + 5 + 29 + 2 + 25 + 13 + 0 + 163) = 256 and (256 & 0xFF) = 0.

In the above stream segment, Roomba's left cliff signal value was 549 (0x0225) and there was no virtual wall signal.

It is up to you not to request more data than can be sent at the current baud rate in the 15 ms time slot. For example, at 115200 baud, a maximum of 172 bytes can be sent in 15 ms:

15 ms / 10 bits *(8 data + start + stop)* * 115200 = 172.8

If more data is requested, the data stream will eventually become corrupted. This can be confirmed by checking the checksum.

The header byte and checksum can be used to align your receiving program with the data. All data chunks start with 19 and end with the 1-byte checksum.

Pause/Resume Stream **Opcode: 150** **Data Bytes: 1**

This command lets you stop and restart the steam without clearing the list of requested packets.

- Serial sequence: [150][Stream State]
- Available in modes: Passive, Safe, or Full
- Changes modes to: No Change
- Range: 0-1

An argument of 0 stops the stream without clearing the list of requested packets. An argument of 1 starts the stream using the list of packets last requested.

Roomba Open Interface Sensor Packets

Roomba sends back one of 58 different sensor data packets, depending on the value of the packet data byte, when responding to a Sensors command, Query List command, or Stream command's request for a packet of sensor data bytes. Some packets contain groups of other packets. Some of the sensor data values are 16 bit values.

Most of the packets (numbers 7 – 58) contain the value of a single sensor or variable, which can be either 1 byte or 2 bytes. Two byte packets correspond to 16-bit values, sent high byte first.

Some of the packets (0-6, 100-107) contain groups of the single-value packets.

Group Packet ID	Packet Size	Contains Packets
	26	7 - 26
1	1	7 - 16
2	6	17 - 2
3	1	21 - 26
4	14	27 - 34
5	12	35 - 42
6	52	7 - 42
1	8	7 - 58
1 1	28	43 - 58
1 6	12	46 - 51
1 7	9	54 - 58

Bumps and Wheel Drops **Packet ID: 7** **Data Bytes: 1, unsigned**

The state of the bumper (0 = no bump, 1 = bump) and wheel drop sensors (0 = wheel raised, 1 = wheel dropped) are sent as individual bits.

Range: 0 – 15

Bit	7	6	5	4	3	2	1	
Value	Reserved				Wheel Drop Left?	Wheel Drop Right?	Bump Left?	Bump Right?

Wall **Packet ID: 8** **Data Bytes: 1, unsigned**

The state of the wall sensor is sent as a 1 bit value (0 = no wall, 1 = wall seen).

Range: 0 – 1

Cliff Left **Packet ID: 9** **Data Bytes: 1, unsigned**

The state of the cliff sensor on the left side of Roomba is sent as a 1 bit value (0 = no cliff, 1 = cliff).

Range: 0 – 1

Cliff Front Left **Packet ID: 10** **Data Bytes: 1, unsigned**

The state of the cliff sensor on the front left of Roomba is sent as a 1 bit value (0 = no cliff, 1 = cliff).

Range: 0 – 1

Cliff Front Right **Packet ID: 11** **Data Bytes: 1, unsigned**

The state of the cliff sensor on the front right of Roomba is sent as a 1 bit value (0 = no cliff, 1 = cliff)

Range: 0 – 1

Cliff Right **Packet ID: 12** **Data Bytes: 1, unsigned**

The state of the cliff sensor on the right side of Roomba is sent as a 1 bit value (0 = no cliff, 1 = cliff)

Range: 0 – 1

Virtual Wall **Packet ID: 13** **Data Bytes: 1, unsigned**

The state of the virtual wall detector is sent as a 1 bit value (0 = no virtual wall detected, 1 = virtual wall detected).

Range: 0 – 1

Wheel Overcurrents **Packet ID: 14** **Data Bytes: 1, unsigned**

The state of the four wheel overcurrent sensors are sent as individual bits (0 = no overcurrent, 1 = overcurrent). There is no overcurrent sensor for the vacuum on Roomba 600.

Range: 0 – 31

Bit	7	6	5	4	3	2	1	
Value	Reserved			Left Wheel	Right Wheel	Main Brush	Reserved	Side Brush

Dirt Detect **Packet IDs: 15** **Data Bytes: 1**

The level of the dirt detect sensor.

Range: 0-255

Unused Byte **Packet IDs: 16** **Data Bytes: 1**

Unused bytes: One unused byte is sent after the dirt detect byte when the requested packet is 0, 1, or 6. The value of the unused byte is always 0.

Range: 0

Infrared Character Omni	Packet ID: 17	Data Bytes: 1, unsigned

This value identifies the 8-bit IR character currently being received by Roomba's omnidirectional receiver. A value of 0 indicates that no character is being received. These characters include those sent by the Roomba Remote, Dock, Virtual Walls, Create robots using the Send-IR command, and user-created devices.

Range: 0 – 255

Infrared Character Left	Packet ID: 52	Data Bytes: 1, unsigned

This value identifies the 8-bit IR character currently being received by Roomba's left receiver. A value of 0 indicates that no character is being received. These characters include those sent by the Roomba Remote, Dock, Virtual Walls, Create robots using the Send-IR command, and user-created devices.

Range: 0 – 255

Infrared Character Right	Packet ID: 53	Data Bytes: 1, unsigned

This value identifies the 8-bit IR character currently being received by Roomba's right receiver. A value of 0 indicates that no character is being received. These characters include those sent by the Roomba Remote, Dock, Virtual Walls, Create robots using the Send-IR command, and user-created devices.

Range: 0 – 255

Dock beam configuration

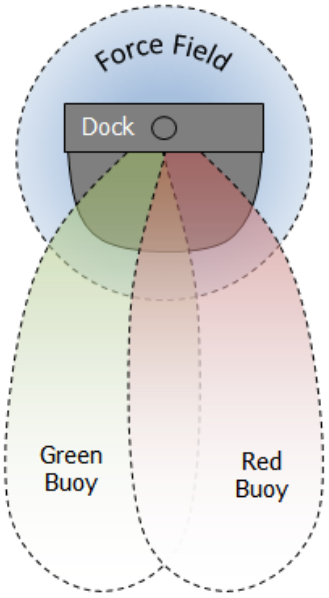

Lighthouse beam configuration

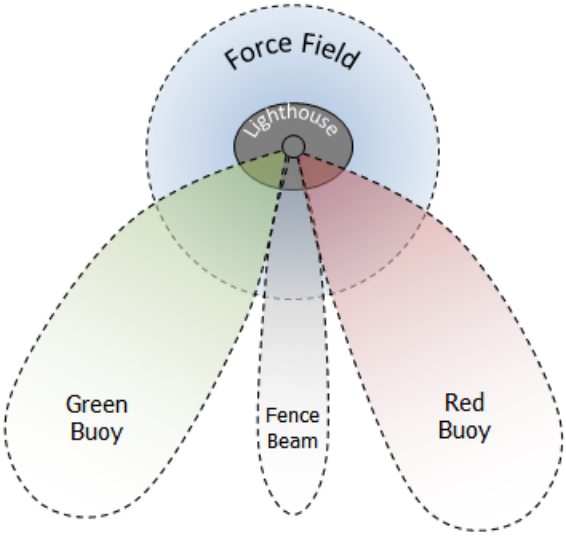

Characters sent by iRobot devices

Sent by iRobot Device	Character Value	Character Name
IR Remote Control	129 130 131 132 133 134 135 136 137 138 139 140 141	Left Forward Right Spot Max Small Medium Large / Clean Stop Power Arc Left Arc Right Stop
Scheduling Remote	142 143	Download Seek Dock
Roomba Discovery Drive-on Charger	240 248 244 242 252 250 246 254	Reserved Red Buoy Green Buoy Force Field Red Buoy and Green Buoy Red Buoy and Force Field Green Buoy and Force Field Red Buoy, Green Buoy and Force Field
Roomba 600 Drive-on Charger	160 161 164 165 168 169 172 173	Reserved Force Field Green Buoy Green Buoy and Force Field Red Buoy Red Buoy and Force Field Red Buoy and Green Buoy Red Buoy, Green Buoy and Force Field
Roomba 600 Virtual Wall	162	Virtual Wall
Roomba 600 Auto-on Virtual Wall	0LLLL0BB	LLLL = Auto-on virtual wall ID (assigned automatically by Roomba 660 robots) 1-10: Valid ID 11: Unbound 12-15: Reserved

Sent by iRobot Device	Character Value	Character Name
Roomba 600 Auto-on Virtual Wall (continued)		BB = Beam set 00 = Fence 01 = Force Field 10 = Green Buoy 11 = Red Buoy

Buttons **Packet ID: 18** **Data Bytes: 1, unsigned**

The state of the Roomba buttons are sent as individual bits (0 = button not pressed, 1 = button pressed). The day, hour, minute, clock, and scheduling buttons that exist only on Roomba 560 and 570 will always return 0 on a Roomba 510 or 530 robot.

Range: 0 – 255

Bit	7	6	5	4	3	2	1	
Value	Clock	Schedule	Day	Hour	Minute	Dock	Spot	Clean

Distance **Packet ID: 19** **Data Bytes: 2, signed**

The distance that Roomba has traveled in millimeters since the distance it was last requested is sent as a signed 16-bit value, high byte first. This is the same as the sum of the distance traveled by both wheels divided by two. Positive values indicate travel in the forward direction; negative values indicate travel in the reverse direction. If the value is not polled frequently enough, it is capped at its minimum or maximum.

Range: -32768 – 32767

NOTE: Create 2 and Roomba 500/600 firmware versions prior to 3.3.0 return an incorrect value for sensors measured in millimeters. To determine the firmware version on your robot, send a 7 via the serial port to reset it. The robot will print a long welcome message which will include the firmware version, for example: r3_robot/tags/release-3.3.0.

Angle **Packet ID: 20** **Data Bytes: 2, signed**

The angle in degrees that Roomba has turned since the angle was last requested is sent as a signed 16-bit value, high byte first. Counter-clockwise angles are positive and clockwise angles are negative. If the value is not polled frequently enough, it is capped at its minimum or maximum.

Range: -32768 – 32767

Charging State **Packet ID: 21** **Data Bytes: 1, unsigned**

This code indicates Roomba's current charging state.

Range: 0 – 5

Code	Charging State
0	Not charging
1	Reconditioning Charging
2	Full Charging
3	Trickle Charging
4	Waiting
5	Charging Fault Condition

Voltage **Packet ID: 22** **Data Bytes: 2, unsigned**

This code indicates the voltage of Roomba's battery in millivolts (mV).

Range: 0 – 65535 mV

Current **Packet ID: 23** **Data Bytes: 2, signed**

The current in milliamps (mA) flowing into or out of Roomba's battery. Negative currents indicate that the current is flowing out of the battery, as during normal running. Positive currents indicate that the current is flowing into the battery, as during charging.

Range: -32768 – 32767 mA

Temperature **Packet ID: 24** **Data Bytes: 1, signed**

The temperature of Roomba's battery in degrees Celsius.

Range: -128 – 127

Battery Charge **Packet ID: 25** **Data Bytes: 2, unsigned**

The current charge of Roomba's battery in milliamp-hours (mAh). The charge value decreases as the battery is depleted during running and increases when the battery is charged.

Range: 0 – 65535 mAh

Battery Capacity **Packet ID: 26** **Data Bytes: 2, unsigned**

The estimated charge capacity of Roomba's battery in milliamp-hours (mAh).

Range: 0 – 65535 mAh

Wall Signal **Packet ID: 27** **Data Bytes: 2, unsigned**

The strength of the wall signal is returned as an unsigned 16-bit value, high byte first.

Range: 0-1023.

Cliff Left Signal **Package ID: 28** **Data Bytes: 2, unsigned**

The strength of the cliff left signal is returned as an unsigned 16-bit value, high byte first.

Range: 0-4095

Cliff Front Left Signal **Package ID: 29** **Data Bytes 2, unsigned**

The strength of the cliff front left signal is returned as an unsigned 16-bit value, high byte first.

Range: 0-4095

Cliff Front Right Signal **Package ID: 30** **Data Bytes 2, unsigned**

The strength of the cliff front right signal is returned as an unsigned 16-bit value, high byte first.

Range: 0-4095

Cliff Right Signal **Package ID: 31** **Data Bytes 2, unsigned**

The strength of the cliff right signal is returned as an unsigned 16-bit value, high byte first.

Range: 0-4095

Unused **Packet ID: 32-33** **Data Bytes, 3**

Charging Sources Available **Packet ID: 34** **Data Bytes 1, unsigned**

Roomba's connection to the Home Base and Internal Charger are returned as individual bits, as below.

Range: 0-3

1 = charging source present and powered; 0 = charging source not present or not powered.

Bit	7	6	5	4	3	2	1	
Value	Reserved						Home Base	Internal Charger

OI Mode **Packet ID: 35** **Data Bytes 1, unsigned**

The current OI mode is returned. See table below.

Range: 0-3

Number	Mode
	Off
1	Passive
2	Safe
3	Full

Song Number **Packet ID: 36** **Data Bytes 1, unsigned**

The currently selected OI song is returned.

Range: 0-15

Song Playing **Packet ID: 37** **Data Bytes 1, unsigned**

The state of the OI song player is returned. 1 = OI song currently playing; 0 = OI song not playing.

Range: 0-1

Number of Stream Packets **Packet ID: 38** **Data Bytes 1, unsigned**

The number of data stream packets is returned.

Range: 0-108

Requested Velocity	Packet ID: 39	Data Bytes 2, signed

The velocity most recently requested with a Drive command is returned as a signed 16-bit number, high byte first.

Range: -500 - 500 mm/s

Requested Radius	Packet ID: 40	Data Bytes 2, signed

The radius most recently requested with a Drive command is returned as a signed 16-bit number, high byte first.

Range: -32768 - 32767 mm

NOTE: Create 2 and Roomba 500/600 firmware versions prior to 3.3.0 return an incorrect value for sensors measured in millimeters. To determine the firmware version on your robot, send a 7 via the serial port to reset it. The robot will print a long welcome message which will include the firmware version, for example: r3_robot/tags/release-3.3.0.

Requested Right Velocity	Packet ID: 41	Data Bytes 2, signed

The right wheel velocity most recently requested with a Drive Direct command is returned as a signed 16-bit number, high byte first.

Range: -500 - 500 mm/s

Requested Left Velocity	Packet ID: 42	Data Bytes 2, signed

The left wheel velocity most recently requested with a Drive Direct command is returned as a signed 16-bit number, high byte first.

Range: -500 - 500 mm/s

Left Encoder Counts	Packet ID: 43	Data Bytes 2, unsigned

The cumulative number of raw left encoder counts is returned as an unsigned 16-bit number, high byte first. This number will roll over to 0 after it passes 65535.

Range: 0 - 65535

Right Encoder Counts	Packet ID: 44	Data Bytes 2, unsigned

The cumulative number of raw right encoder counts is returned as an unsigned 16-bit number, high byte first. This number will roll over to 0 after it passes 65535.

Range: 0 - 65535

Light Bumper **Package ID: 45** **Data Bytes 1, unsigned**

The light bumper detections are returned as individual bits.

Bit	7	6	5	4	3	2	1	
Value	Reserved		Lt Bumper Right?	Lt Bumper Front Right?	Lt Bumper Center Right?	Lt Bumper Center Left?	Lt Bumper Front Left?	Lt Bumper Left?

Range: 0-127

Light Bump Left Signal **Package ID: 46** **Data Bytes 2, unsigned**

The strength of the light bump left signal is returned as an unsigned 16-bit value, high byte first.

Range: 0-4095

Light Bump Front Left Signal **Package ID: 47** **Data Bytes 2, unsigned**

The strength of the light bump front left signal is returned as an unsigned 16-bit value, high byte first.

Range: 0-4095

Light Bump Center Left Signal **Package ID: 48** **Data Bytes 2, unsigned**

The strength of the light bump center left signal is returned as an unsigned 16-bit value, high byte first.

Range: 0-4095

Light Bump Center Right Signal **Package ID: 49** **Data Bytes 2, unsigned**

The strength of the light bump center right signal is returned as an unsigned 16-bit value, high byte first.

Range: 0-4095

Light Bump Front Right Signal **Package ID: 50** **Data Bytes 2, unsigned**

The strength of the light bump front right signal is returned as an unsigned 16-bit value, high byte first.

Range: 0-4095

Light Bump Right Signal **Package ID: 51** **Data Bytes 2, unsigned**

The strength of the light bump right signal is returned as an unsigned 16-bit value, high byte first.

Range: 0-4095

Left Motor Current **Packet ID: 54** **Data Bytes: 2, signed**

This returns the current being drawn by the left wheel motor as an unsigned 16 bit value, high byte first.

Range: -32768 – 32767 mA

Right Motor Current **Packet ID: 55** **Data Bytes: 2, signed**

This returns the current being drawn by the right wheel motor as an unsigned 16 bit value, high byte first.

Range: -32768 – 32767 mA

Main Brush Motor Current **Packet ID: 56** **Data Bytes: 2, signed**

This returns the current being drawn by the main brush motor as an unsigned 16 bit value, high byte first.

Range: -32768 – 32767 mA

Side Brush Motor Current **Packet ID: 57** **Data Bytes: 2, signed**

This returns the current being drawn by the side brush motor as an unsigned 16 bit value, high byte first.

Range: -32768 – 32767 mA

Stasis **Packet ID: 58** **Data Bytes: 1**

The stasis caster sensor returns 1 when the robot is making forward progress and 0 when it is not. This always returns 0 when the robot is turning, driving backward, or not driving. Range: 0 – 1

Roomba Open Interface Commands Quick Reference

Command	Opcode	Data Bytes:1	Data Bytes:2	Data Bytes:3	Data Bytes:4	Etc.
Start	128					
Baud	129	baud-code				
Control	13					
Safe	131					
Full	132					
Power	133					
Spot	134					
Clean	135					
Max Clean	136					
Drive	137	velocity-high	velocity-low	radius-high	radius-low	
Motors	138	motors-state				
Leds	139	leds-state	power-color	power-intensity		
Song	14	song-num	song-length			
Play	141	song-num				
Query	142	packet				
Force Seeking Dock	143					
Pwm Motors	144	main-brush-pwm	side-brush-pwm	vacuum-pwm		
Drive Wheels	145	right-velocity-high	right-velocity-low	left-velocity-high	left-velocity-low	
Drive Pwm	146	right-pwm-high	right-pwm-low	left-pwm-high	left-pwm-low	
Stream	148	num-packets				
Query List	149	num-packets				
Do Stream	15	stream-state				
Scheduling Leds	162	weekdays	scheduling-leds-state			
Digit Leds Raw	163	digit-3	digit-2	digit-1	digit-	
Digit Leds Ascii	164	digit-3	digit-2	digit-1	digit-	
Buttons	165	buttons				
Schedule	167	days	sun-hour	sun-min	mon-hour	Etc.
Set Day/Time	168	day	hour	minute		
Stop	173					

LED Data Bytes 1: LED Bits (0 – 255)

Home and Spot use green LEDs: 0 = off, 1 = on
Check Robot uses an orange LED.
Debris uses a blue LED.

Bit	7	6	5	4	3	2	1	
Value	Reserved				Check Robot	Dock	Spot	Debris

Clean/Power LED

The Clean/Power LED uses a bicolor (red/green) LED. The intensity and color of this LED can be controlled with 8-bit resolution.

Clean/Power LED Color (0 – 255)

0 = green, 255 = red. Intermediate values are intermediate colors (orange, yellow, etc).

Clean/Power LED Intensity (0 – 255)

0 = off, 255 = full intensity. Intermediate values are intermediate intensities.

Weekday LED Bits

Bit	7	6	5	4	3	2	1	
Value	Reserved	Sat	Fri	Thu	Wed	Tue	Mon	Sun

Scheduling LED Bits

Bit	7	6	5	4	3	2	1	
Value	Reserved			Schedule	Clock	AM	PM	Colon (:)

Digit N Bits

Bit	7	6	5	4	3	2	1	
Value	Reserved	G	F	E	D	C	B	A

Buttons

Bit	7	6	5	4	3	2	1	
Value	Clock	Schedule	Day	Hour	Minute	Dock	Spot	Clean

Table of ASCII codes

Code	Display	Code	Display	Code	Display	Code	Display
32		53	5	7 , 1 2	F	86, 118	V
33	!	54	6	71, 1 3	G	87, 119	W
34	”	55	7	72, 1 4	H	88, 12	X
35	#	56	8	73, 1 5	I	89, 121	Y
37	%	57	9	74, 1 6	J	9 , 122	Z
38	&	58	:	75, 1 7	K	91, 4	[
39	’	59	;	76, 1 8	L	92	\
44	,	6	¡	77, 1 9	M	93, 41	]
45	-	61	=	78, 11	N	94	∧
46	.	62	¿	79, 111	O	95	_
47	/	63	?	8 , 112	P	96	‘
48		65, 97	A	81, 113	Q	123	{
49	1	66, 98	B	82, 114	R	124	—
5	2	67, 99	C	83, 36, 115	S	125	}
51	3	68, 1	D	84, 116	T	126	
52	4	69, 1 1	E	85, 117	U		

Baud Codes

Baud Code	Baud Rate in BPS
	3
1	6
2	12
3	24
4	48
5	96
6	144
7	192
8	288
9	384
1	576
11	1152

Note Frequencies

Number	Note	Frequency	Number	Note	Frequency	Number	Note	Frequency
31	G	49.	58	A#	233.1	85	C#	11 8.8
32	G#	51.9	59	B	246.9	86	D	1174.7
33	A	55.	6	C	261.6	87	D#	1244.5
34	A#	58.3	61	C#	277.2	88	E	1318.5
35	B	61.7	62	D	293.7	89	F	1396.9
36	C	65.4	63	D#	311.1	9	F#	148 .
37	C#	69.3	64	E	329.6	91	G	1568.
38	D	73.4	65	F	349.2	92	G#	1661.3
39	D#	77.8	66	F#	37 .	93	A	176 .
4	E	82.4	67	G	392.	94	A#	1864.7
41	F	87.3	68	G#	415.3	95	B	1975.6
42	F#	92.5	69	A	44 .	96	C	2 93.1
43	G	98.	7	A#	466.2	97	C#	2217.5
44	G#	1 3.8	71	B	493.9	98	D	2349.4
45	A	11 .	72	C	523.3	99	D#	2489.1
46	A#	116.5	73	C#	554.4	1	E	2637.1
47	B	123.5	74	D	587.3	1 1	F	2793.9
48	C	13 .8	75	D#	622.3	1 2	F#	296 .
49	C#	138.6	76	E	659.3	1 3	G	3136.
5	D	146.8	77	F	698.5	1 4	G#	3322.5
51	D#	155.6	78	F#	74 .	1 5	A	352 .1
52	E	164.8	79	G	784.	1 6	A#	3729.4
53	F	174.6	8	G#	83 .6	1 7	B	3951.2
54	F#	185.	81	A	88 .			
55	G	196.	82	A#	932.4			
56	G#	2 7.7	83	B	987.8			
57	A	22 .	84	C	1 46.5			

Set Schedule Days

Bit	7	6	5	4	3	2	1	
Value	Reserved	Sat	Fri	Thu	Wed	Tue	Mon	Sun

Motors State

Bit	7	6	5	4	3	2	1	
Value	Reserved			Main Brush Direction	Side Brush Clock-wise?	Main Brush	Vacuum	Side Brush

Roomba Open Interface Sensors Quick Reference

Roomba sends back one of 58 different sensor data packets in response to a Sensors command, depending on the value of the packet ID data byte. Some packets contain groups of other packets. The sensor values are specified below in the order in which they will be sent. Some of the sensor data values are 16 bit values. These values are sent as two bytes, high byte first.

Group Packet Sizes and Contents

Group Packet ID	Packet Size	Contains Packets
	26	7 - 26
1	1	7 - 16
2	6	17 - 2
3	1	21 - 26
4	14	27 - 34
5	12	35 - 42
6	52	7 - 42
1	8	7 - 58
1 1	28	43 - 58
1 6	12	46 - 51
1 7	9	54 - 58

Bumps and Wheel Drops

Bit	7	6	5	4	3	2	1	
Value	Reserved				Wheel Drop Left?	Wheel Drop Right?	Bump Left?	Bump Right?

Buttons

Bit	7	6	5	4	3	2	1	
Value	Clock	Schedule	Day	Hour	Minute	Dock	Spot	Clean

Charger Available

Bit	7	6	5	4	3	2	1	
Value	Reserved						Home Base	Internal Charger

Overcurrents

Bit	7	6	5	4	3	2	1	
Value	Reserved			Left Wheel	Right Wheel	Main Brush	Reserved	Side Brush

Charging State Codes

Code	Charging state
0	Not charging
1	Reconditioning Charging
2	Full Charging
3	Trickle Charging
4	Waiting
5	Charging Fault Condition

Open Interface Modes

Number	Mode
	Off
1	Passive
2	Safe
3	Full

Light Bumper

Bit	7	6	5	4	3	2	1	
Value	Reserved		Lt Bumper Right?	Lt Bumper Front Right?	Lt Bumper Center Right?	Lt Bumper Center Left?	Lt Bumper Front Left?	Lt Bumper Left?

Sensor Packet Membership Table

| Packet Group Membership | | |

Appendix: What's new in Create 2

There have been a number of modifications since the Create Open Interface specification.

The default baud rate has changed from 57600 to 115200 kbps.

New commands allow full control of Roomba 600's rich user interface and scheduling functionality.

- 162: Scheduling Leds
- 163: Digit Leds Raw
- 164: Digit Leds ASCII
- 165: Buttons
- 167: Schedule
- 168: Set Day/Time
- 173: Stop

New sensor groups: 100-107

New sensor packets:

- 43: Encoder Counts Left
- 44: Encoder Counts Right
- 45: Light Bumper
- 46: Light Bump Left
- 47: Light Bump Front Left
- 48: Light Bump Center Left
- 49: Light Bump Center Right
- 50: Light Bump Front Right
- 51: Light Bump Right
- 52: IR Opcode Left
- 53: IR Opcode Right
- 54: Left Motor Current
- 55: Right Motor Current
- 56: Main Brush Current
- 57: Side Brush Current
- 58: Stasis

Scripting, demos, low side drivers, IR signal generation, and digital inputs are no longer available in Roomba OI.

Removed commands:

- 147: Digital Outputs
- 151: Send IR
- 152: Script
- 153: Play Script
- 154: Show Script
- 155: Wait Time
- 156: Wait Distance
- 157: Wait Angle
- 158: Wait Event

Removed sensors:

- Cargo Bay Digital Inputs
- Wheel-drop Castor