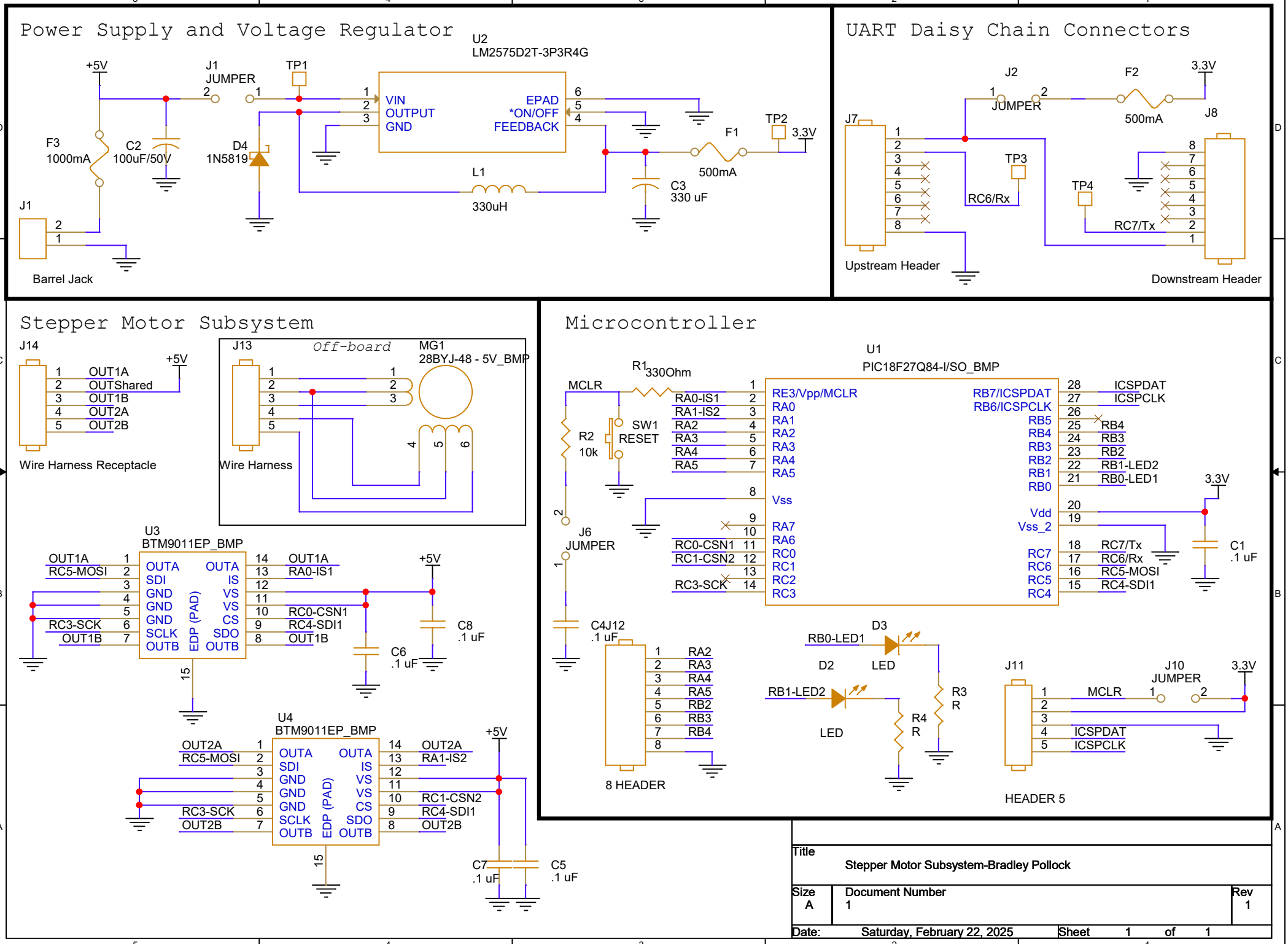

Title	Stepper Motor Subsystem-Bradley Pollock	
Size A	Document Number 1	Rev 1
Date: Saturday, February 22, 2025	Sheet 1 of 1	