Power

File: power.kicad_sch

Sensors

File: sensors.kicad_sch

Audio

File: audio.kicad_sch

Audio2

File: audio2.kicad_sch

MCU1

File: MCU.kicad_sch

MCU2

File: MCU2.kicad_sch

Sheet: /
File: RX8-7.kicad_sch

Title:

Size: A4	Date:	**Rev:**
KiCad E.D.A. 9.0.4		Id: 1/7

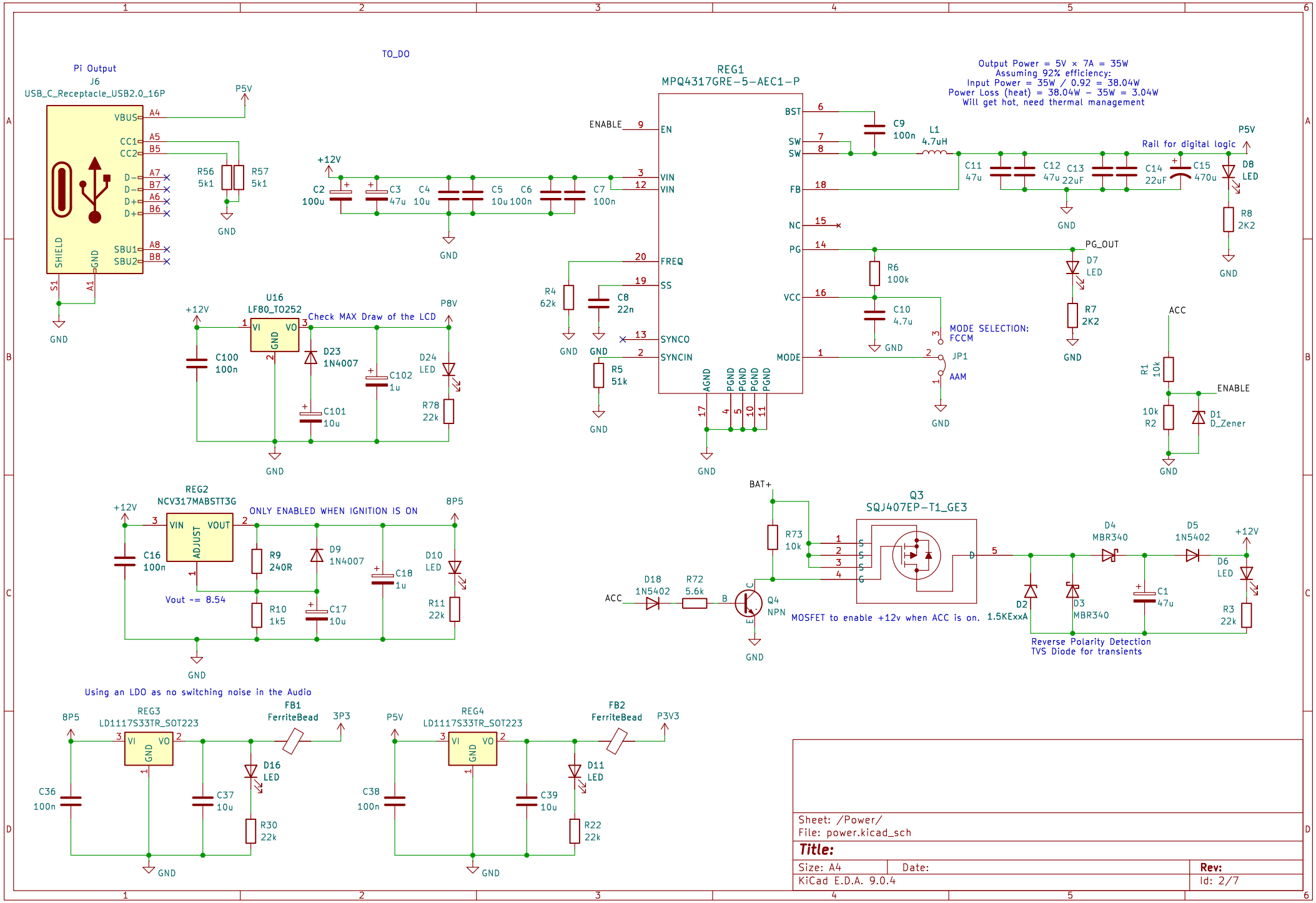

Sheet: /Power/
File: power.kicad_sch

Title:

Size: A4	Date:	Rev:
KiCad E.D.A. 9.0.4		Id: 2/7

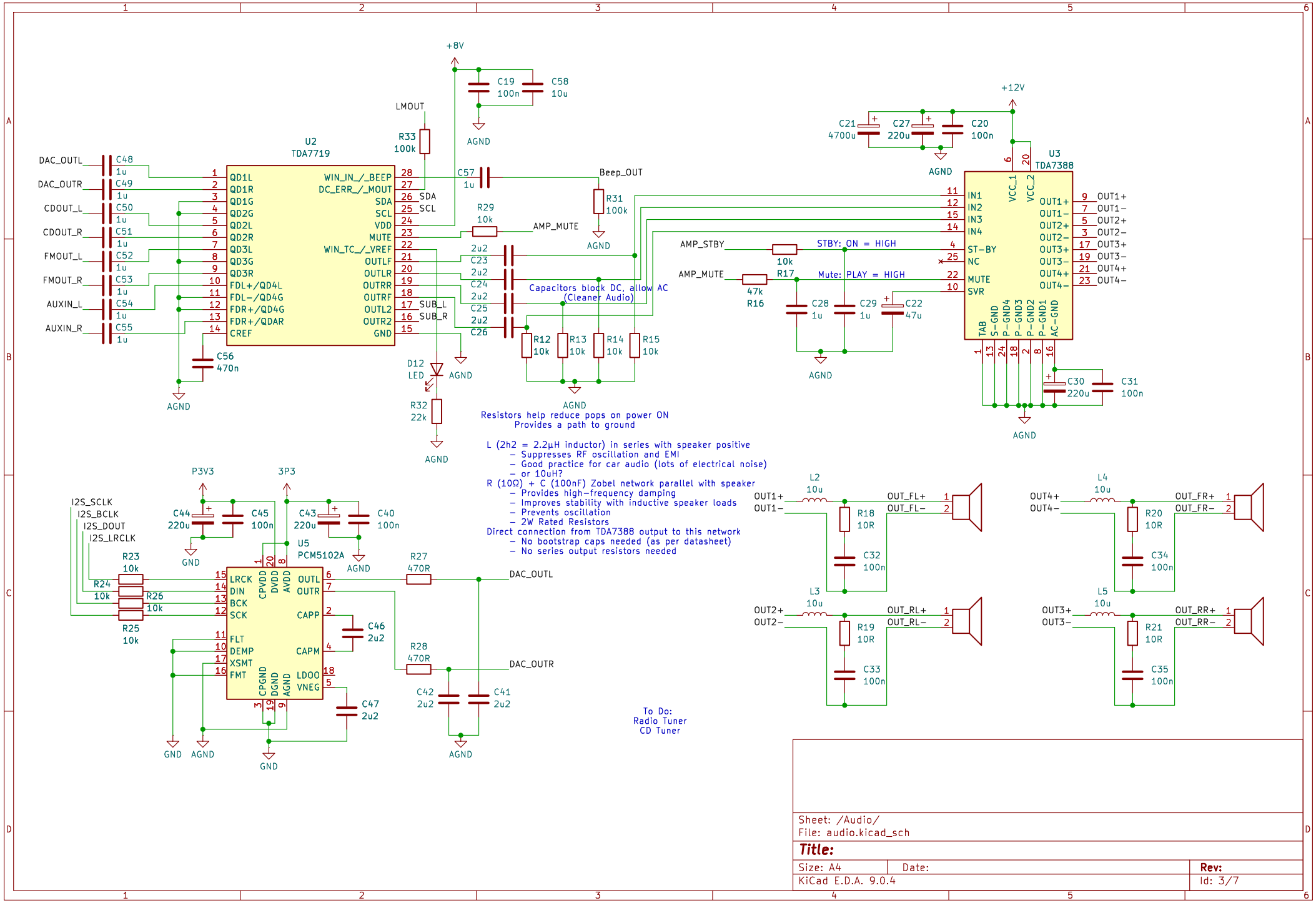

Sheet: /Audio/
File: audio.kicad_sch

Title:

Size: A4	Date:	Rev:
KiCad E.D.A. 9.0.4		Id: 3/7

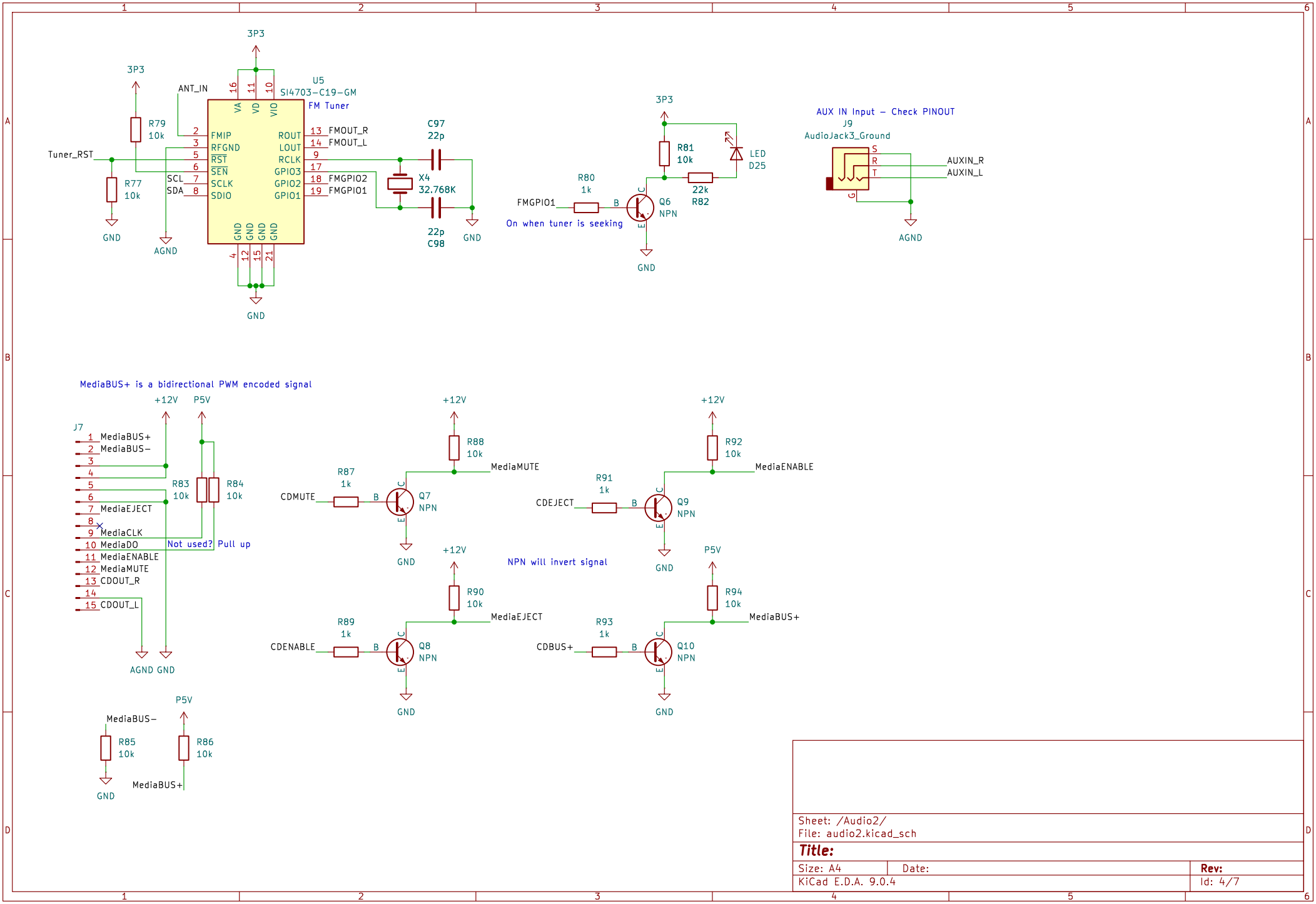

Sheet: /Audio2/
File: audio2.kicad_sch

Title:

Size: A4	Date:	Rev:
KiCad E.D.A. 9.0.4		Id: 4/7

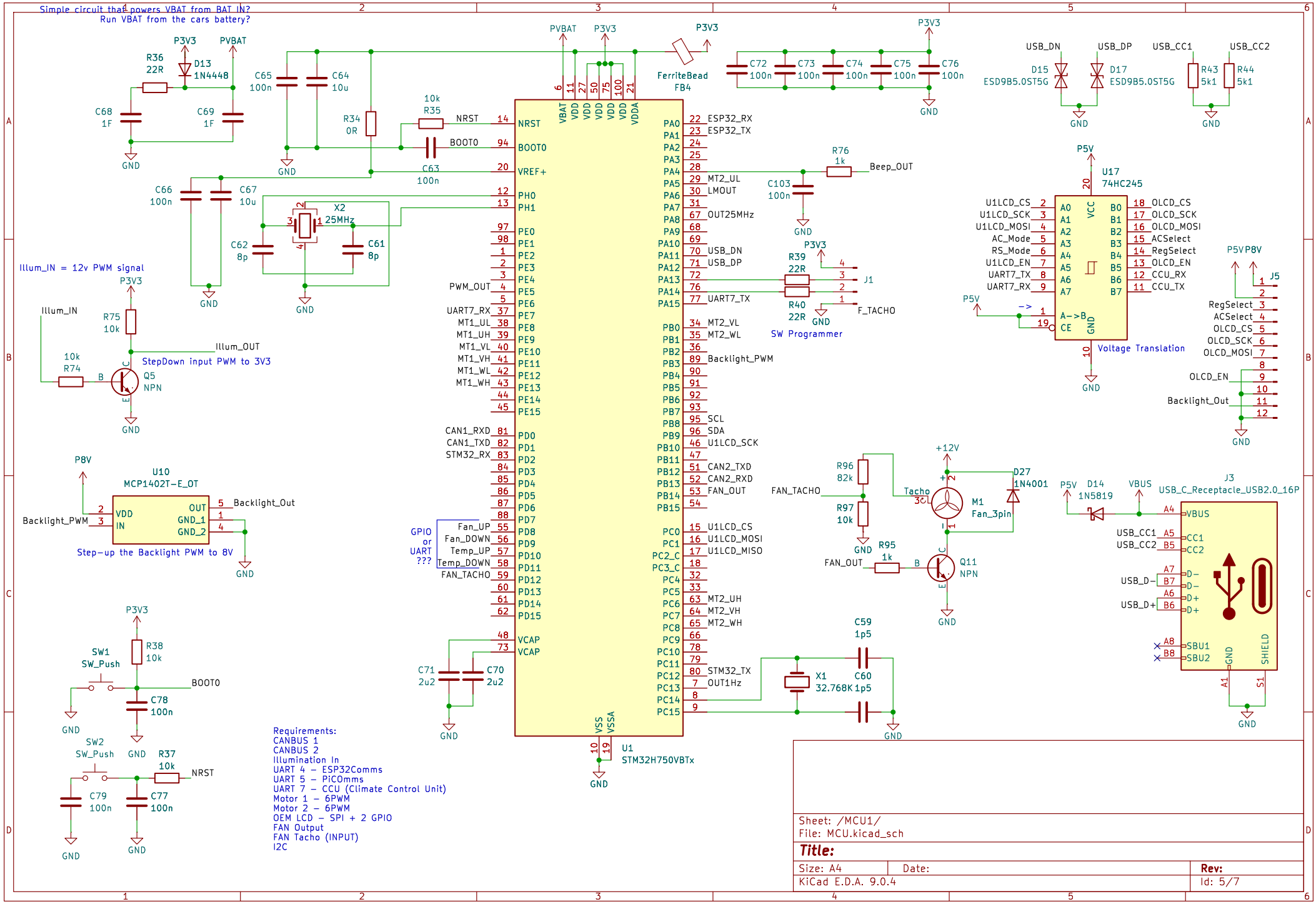
Simple circuit that powers VBAT from BAT IN?
Run VBAT from the cars battery?
P3V3
PVBAT
R36 22R
D13 1N4448
C68 1F
C69 1F
GND
C65 100n
C64 10u
R34 0R
10k R35
NRST
BOOT0
C63 100n
C66 100n
C67 10u
X2 25MHz
C62 8p
C61 8p
FerriteBead FB4
C72 100n
C73 100n
C74 100n
C75 100n
C76 100n
USB_DN
USB_DP
USB_CC1
USB_CC2
D15 ESD9B5.0ST5G
D17 ESD9B5.0ST5G
R43 5k1
R44 5k1
R76 1k
Beep_OUT
C103 100n
P5V
U17 74HC245
U1LCD_CS
U1LCD_SCK
U1LCD_MOSI
AC_Mode
RS_Mode
U1LCD_EN
UART7_TX
UART7_RX
OLCD_CS
OLCD_SCK
OLCD_MOSI
ACSelect
RegSelect
OLCD_EN
CCU_RX
CCU_TX
Voltage Translation
P8V
J5
Backlight_Out
Illum_IN = 12v PWM signal
Illum_IN
R75 10k
Illum_OUT
StepDown input PWM to 3V3
10k R74
Q5 NPN
R39 22R
R40 22R
J1
F_TACHO
SW Programmer
PWM_OUT
MT1_UL
MT1_UH
MT1_VL
MT1_VH
MT1_WL
MT1_WH
USB_DN
USB_DP
Backlight_PWM
ESP32_RX
ESP32_TX
LMOUT
OUT25MHz
UART7_TX
MT2_VL
MT2_WL
SCL
SDA
U1LCD_SCK
CAN2_TXD
CAN2_RXD
FAN_OUT
U1LCD_CS
U1LCD_MOSI
U1LCD_MISO
MT2_UH
MT2_VH
MT2_WH
STM32_TX
OUT1Hz
CAN1_RXD
CAN1_TXD
STM32_RX
GPIO or UART ???
Fan_UP
Fan_DOWN
Temp_UP
Temp_DOWN
FAN_TACHO
C71 2u2
C70 2u2
X1 32.768K
C59 1p5
C60 1p5
U1 STM32H750VBTx
U10 MCP1402T-E_OT
VDD
IN
OUT
GND_1
GND_2
Step-up the Backlight PWM to 8V
R96 82k
R97 10k
R95 1k
Q11 NPN
+12V
D27 1N4001
M1 Fan_3pin
Tacho
D14 1N5819
VBUS
J3 USB_C_Receptacle_USB2.0_16P
VBUS
CC1
CC2
D-
D+
SBU1
SBU2
SHIELD
SW1 SW_Push
R38 10k
C78 100n
SW2 SW_Push
R37 10k
C79 100n
C77 100n
NRST
Requirements:
CANBUS 1
CANBUS 2
Illumination In
UART 4 – ESP32Comms
UART 5 – PiCOmms
UART 7 – CCU (Climate Control Unit)
Motor 1 – 6PWM
Motor 2 – 6PWM
OEM LCD – SPI + 2 GPIO
FAN Output
FAN Tacho (INPUT)
I2C
Sheet: /MCU1/
File: MCU.kicad_sch
Title:
Size: A4
Date:
Rev:
KiCad E.D.A. 9.0.4
Id: 5/7

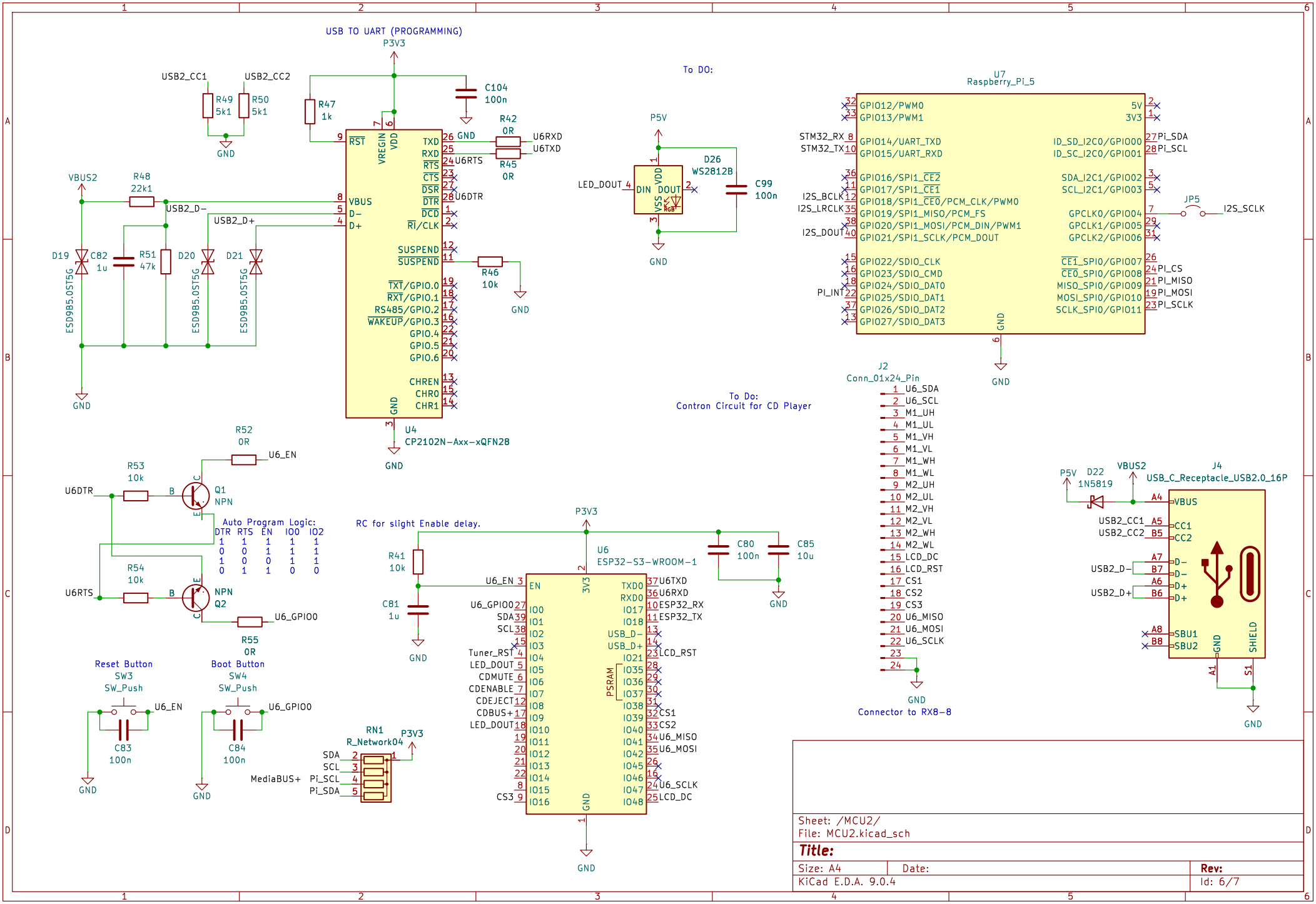

Sheet: /MCU2/
File: MCU2.kicad_sch

Title:

Size: A4	Date:	Rev:
KiCad E.D.A. 9.0.4		Id: 6/7

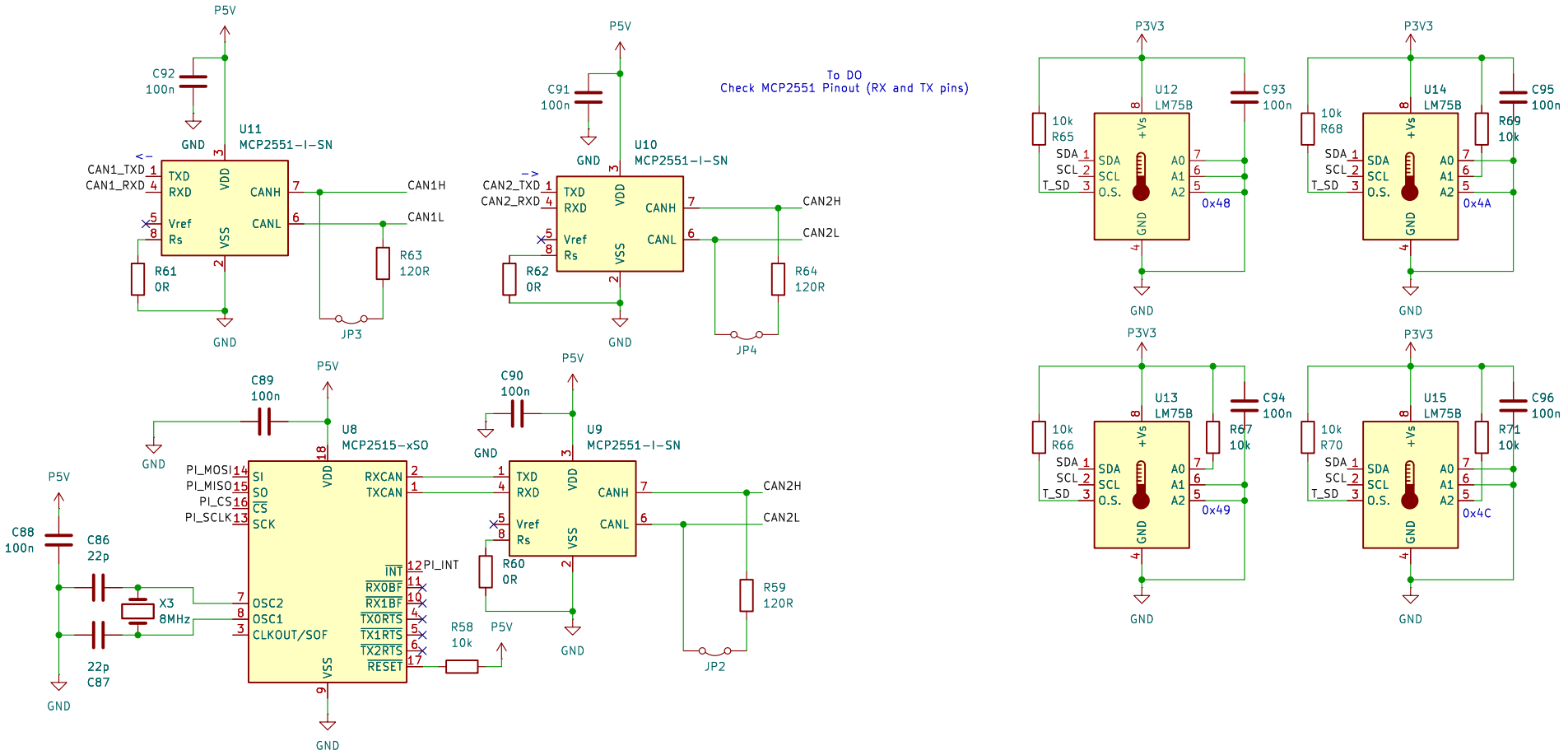

Sheet: /Sensors/
File: sensors.kicad_sch

Title:

Size: A4	Date:	Rev:
KiCad E.D.A. 9.0.4		Id: 7/7