I am what I am. In a world where purpose feels rejected, And beliefs are questioned, disrespected, Talents, like hidden gems, remain unseen, As if veiled by a screen that forever screens. Oh, how tiring it is, for nobody can help, In this realm where ignorance dwells, Craving truth, I search and seek, But finding fools whose minds are weak. Like a game of life, a stratego we play, Yet no feedback comes my way, Friends who offer naught but shallow words, Adding no value, their presence absurd. Love, jobs, education, and science's allure, Abandoned long ago, ambition no longer pure, Now food and music are my sole pleasures, They soothe and distract, bringing comforting treasures. But amidst the fragments, there's a yearning strife, A soul seeking truth, awakened to life, Though unrecognized, I'll continue to roam, In the hope of finding a stable income.

Physics

High Energy Particle Physics (1958) - particle theory, phenomenology and experiment that ignores gravity
Quantum Gravity and String Theory (2021) - and any other unified theories or "TOEs" that include gravity
Relativity and Cosmology (4583) - classical physics of special and general relativity including cosmology and application in astrophysics
Astrophysics (2815) - astronomical physics covering planetary, stellar and galactic systems.
Quantum Physics (4802) - other aspects of quantum physics including quantum information theory
Nuclear and Atomic Physics (789)
Condensed Matter (1562)
Thermodynamics and Energy (441) - statistical mechanics
Classical Physics (2074) - and other general physics topics outside relativity and quantum theory
Geophysics (303)
Climate Research (135)
Mathematical Physics (1423) - mathematical research related to physics
History and Philosophy of Physics (543) - including sociology of science

Mathematics

Set Theory and Logic (303)
Number Theory (2984)
Combinatorics and Graph Theory (235)
Algebra (450)
Geometry (521)
Topology (184)
Functions and Analysis (571)
Statistics (326)
General Mathematics (3269) - covering multiple areas

Daniel Å. Jonsson · 1m

a) In 2019 I was reading lots of books including SEO for market research. The only way I know today is mvp, survelliance and quora for lurkers. I decided to add a mixture of logical errors.

b) my experiments was watching political debate since I already know which party is popular. Ebba had no pokerface. I give her (G)ambler. One another hypothesis was facebook. I used two contrary categories like “non-verbal" and “general". I realized that 4 of 5 can be negative when close to each other.

c) I used continues variables to datasets this year and now after implementing cma-es or ellipsoid_onemax I must begin from start with integers instead. I also tried to play Go but could not rank higher than 12 kyu. I guess puzzles is an indicator rather than tools for logical consistency. I used Canterbury puzzles 2019 when dividing it to every category based on WAIS. G (snail, cheese, goose, carpenter), Z (guys, boxers, fixed, oxen), J (whistle, rope, kennel), T (tower, ozanam, cookies, position). S (Magic square, teacup, flour snacks, kiss).

d) fundamental: I make an analogy to WAIS with emotions for ranking. Similiar to economists. I think disgust is a defense against probabilistic reasoning with quantites. Its opposite J includes “non-sequitur, rope". J discredit T with A * B = C, but B * A =/= C. Paradoxes often have a real and imaginary part. Liar is exactly 1/2 and Zeta has 1/2 om critical line. This give rise to an independent benchmark to classify utils based on pure concepts like conjuction.

e) I thought it would be sufficient with fundamental attributes to speech for conflict resolution but this can only be applied to data science instead of humanities. My first hypothesis used sum, mean and std. Now I will be looking to differential evolution after re-doing it. I have a word list generator. I can use it to predict next random word based on index and nlp tag. I have used genetic algorithm once and had 10/25 Zener cards correct. My highscore is 7.

If you think I am random listen to this: ‘tezkere, macaw, bathysphere, eyeball, whereby, wugg, aa, wolver, azoth, trepan, whosomever, hallowedly, terbium, cynoplastics”. This can filter out necessary gradient optimum methods. After finding gradient formula I can use it to discriminate output in a FlowGAN.

What is the difference between potpourri and a model?? My postpourri from ranking estimation is cbow > dpg > benchmark (¢) = validity. I have tried to use logistic regression to 5 variables but it was too difficult. If I need it I can verify it with soccer

Hypocrite is easy to recognize but impossible to get rid of when they're managers or directors!

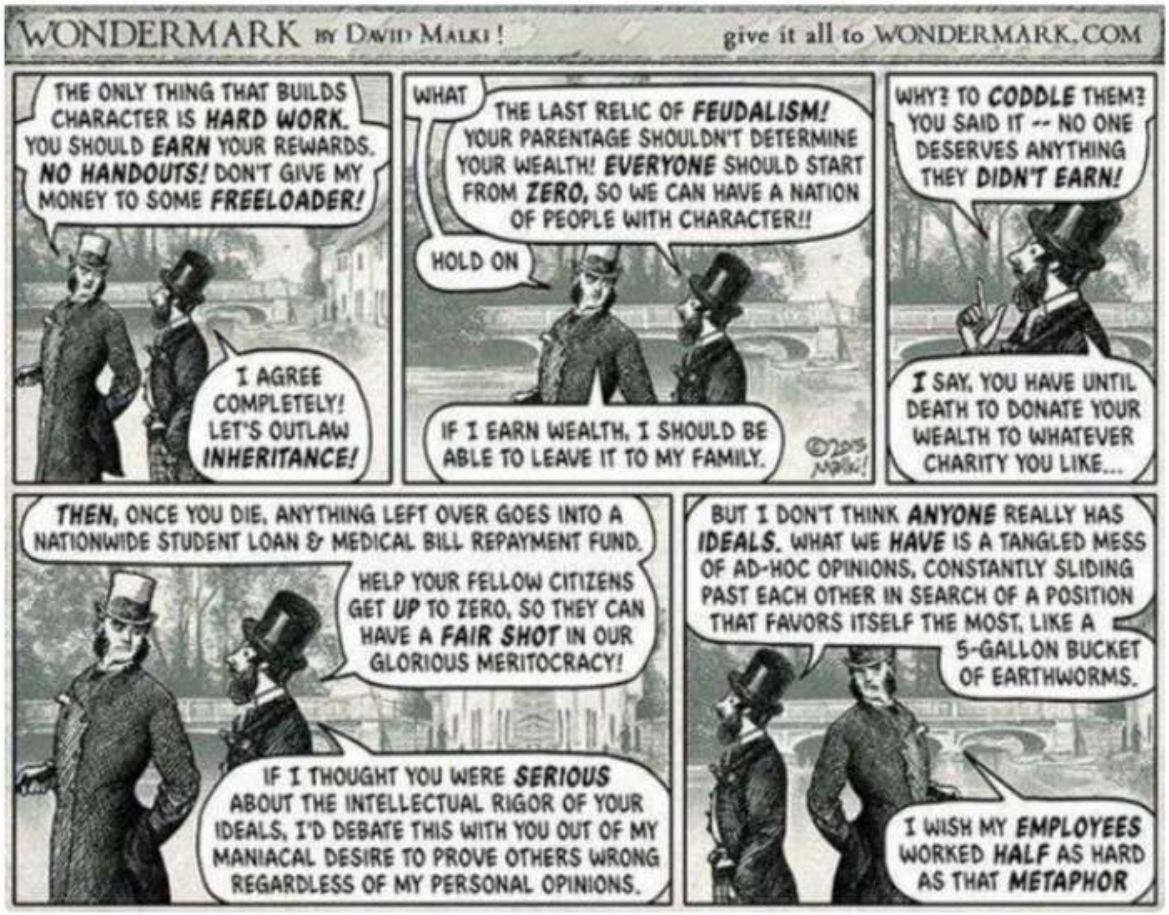

Stratego have x,1,2,3,y where x=bomb, y=fieldmarshall. 2 identify other fast. 3 remove x. 1 can only kill y. 2 is generalist and 3 a specialist. 1 can be random killer that take out the boss. Y is a switch between 2 and 3. 4 is common. They can hide behind bombs and kill 3. Sharon is 4. In this low context I, promoter is Y but in Space I am 1. I make admin realise his own bullshit! 🙂

This is Montessori. My teacher was C in passion. Confusing Love with Needs. What we students need is groups or monads for knowing stack flows like Multiplication / Division > Exponentials / Logarithm > Calculus.

Theorem 2.10 1. $P \equiv \neg\neg P$ *(law of double negation),*

2. $P \wedge P \equiv P$; $P \vee P \equiv P$ *(laws of idempotence),*

3. $(P \Rightarrow Q) \equiv \neg P \vee Q$;
$\neg(P \Rightarrow Q) \equiv P \wedge \neg Q$.

4. $(\neg P \Rightarrow \neg Q) \equiv (Q \Rightarrow P)$;
$(P \Rightarrow \neg Q) \equiv (Q \Rightarrow \neg P)$;
$(\neg P \Rightarrow Q) \equiv (\neg Q \Rightarrow P)$ *(laws of contraposition),*

5. $(P \Leftrightarrow Q) \equiv ((P \Rightarrow Q) \wedge (Q \Rightarrow P))$
$\equiv ((P \wedge Q) \vee (\neg P \wedge \neg Q))$.

6. $P \wedge Q \equiv Q \wedge P$; $P \vee Q \equiv Q \vee P$ *(laws of commutativity),*

7. $\neg(P \wedge Q) \equiv \neg P \vee \neg Q$;
$\neg(P \vee Q) \equiv \neg P \wedge \neg Q$ *(DeMorgan laws).*

8. $P \wedge (Q \wedge R) \equiv (P \wedge Q) \wedge R$;
$P \vee (Q \vee R) \equiv (P \vee Q) \vee R$ *(laws of associativity),*

9. $P \wedge (Q \vee R) \equiv (P \wedge Q) \vee (P \wedge R)$;
$P \vee (Q \wedge R) \equiv (P \vee Q) \wedge (P \vee R)$ *(distribution laws),*

```
test1  = logEquiv1 id (\ p -> not (not p))
test2a = logEquiv1 id (\ p -> p && p)
test2b = logEquiv1 id (\ p -> p || p)
test3a = logEquiv2 (\ p q -> p ==> q) (\ p q -> not p || q)
test3b = logEquiv2 (\ p q -> not (p ==> q)) (\ p q -> p && not q)
test4a = logEquiv2 (\ p q -> not p ==> not q) (\ p q -> q ==> p)
test4b = logEquiv2 (\ p q -> p ==> not q) (\ p q -> q ==> not p)
test4c = logEquiv2 (\ p q -> not p ==> q) (\ p q -> not q ==> p)
test5a = logEquiv2 (\ p q -> p <=> q)
                   (\ p q -> (p ==> q) && (q ==> p))
test5b = logEquiv2 (\ p q -> p <=> q)
                   (\ p q -> (p && q) || (not p && not q))
test6a = logEquiv2 (\ p q -> p && q) (\ p q -> q && p)
test6b = logEquiv2 (\ p q -> p || q) (\ p q -> q || p)
test7a = logEquiv2 (\ p q -> not (p && q))
                   (\ p q -> not p || not q)
test7b = logEquiv2 (\ p q -> not (p || q))
                   (\ p q -> not p && not q)
test8a = logEquiv3 (\ p q r -> p && (q && r))
                   (\ p q r -> (p && q) && r)
test8b = logEquiv3 (\ p q r -> p || (q || r))
                   (\ p q r -> (p || q) || r)
test9a = logEquiv3 (\ p q r -> p && (q || r))
                   (\ p q r -> (p && q) || (p && r))
test9b = logEquiv3 (\ p q r ->  p || (q && r))
                   (\ p q r -> (p || q) && (p || r))
```

I found 2 books about Haskell which is 100 times better than the best book about Python! In terms of ranking it is C > P > H. This is why the C teacher need to know this lower frameworks for being more certified than a Youtuber... I know because I have read 20 books about Python and one of them was 2000 pages from a server user. 2 years from lurking around forums is how I gained skills. Specialization have no merits in the classroom where you must prepare a group with lowest average denominator.

3. $P \vee \top \equiv \top$; $P \wedge \bot \equiv \bot$ *(dominance laws),*

4. $P \vee \bot \equiv P$; $P \wedge \top \equiv P$ *(identity laws),*

5. $P \vee \neg P \equiv \top$ *(law of excluded middle),*

6. $P \wedge \neg P \equiv \bot$ *(contradiction).*

Exercise 2.13 Implement checks for the principles from Theorem 2.12. ∎

Without proof, we state the following **Substitution Principle**: If Φ and Ψ are equivalent, and Φ' and Ψ' are the results of substituting Ξ for every occurrence of P in Φ and in Ψ, respectively, then Φ' and Ψ' are equivalent. Example 2.14 makes clear what this means.

Translation Problems. It is easy to find examples of English sentences that are hard to translate into the logical vernacular. E.g., in *between two rationals is a third one* it is difficult to discover a universal quantifier and an implication.

Also, sometimes the English has an indefinite article where the meaning is clearly universal. Consider the sentence *a well-behaved child is a quiet child*. The indefinite articles here may suggest *existential* quantifiers; however, the reading that is clearly meant has the form

$$\forall x \in \mathrm{C}\,(\text{Well-behaved}(x) \;\Rightarrow\; \text{Quiet}(x)).$$

A famous example from philosophy of language is: *if a farmer owns a donkey, he beats it*. Again, in spite of the indefinite articles, the meaning is universal:

$$\forall x \forall y((\text{Farmer}(x) \wedge \text{Donkey}(y) \wedge \text{Own}(x,y)) \Rightarrow \text{Beat}(x,y)).$$

I want to give structure. You know that coding change your personality. I was more calm before I started with computers. I was not a nerd until 2018 when I was encouraged by people around me. I was a jock with a flair of high IQ. I could get A in primary school without studying. I was just a jock until some long process. I started with Linux after an introduction. I did not known anything about computers. I find it complicated and boring. It took some time for me to get used with it after forcing myself to grasp it. I am more robotic now than ever. I used to love art including infographics but know I just are satisfied with text outcomes. It's impossible to draw a globe to connect all CS concepts.

Constructor

I begin with a simple Car model. I have assembled a Volvo with Tetrapak and box car. I don't watch tutorials. Instead I used my imagination. I have always been gifted with Lego. I have seen drawings to MVP explaining that a skateboard > bicycle = car and not wheels.

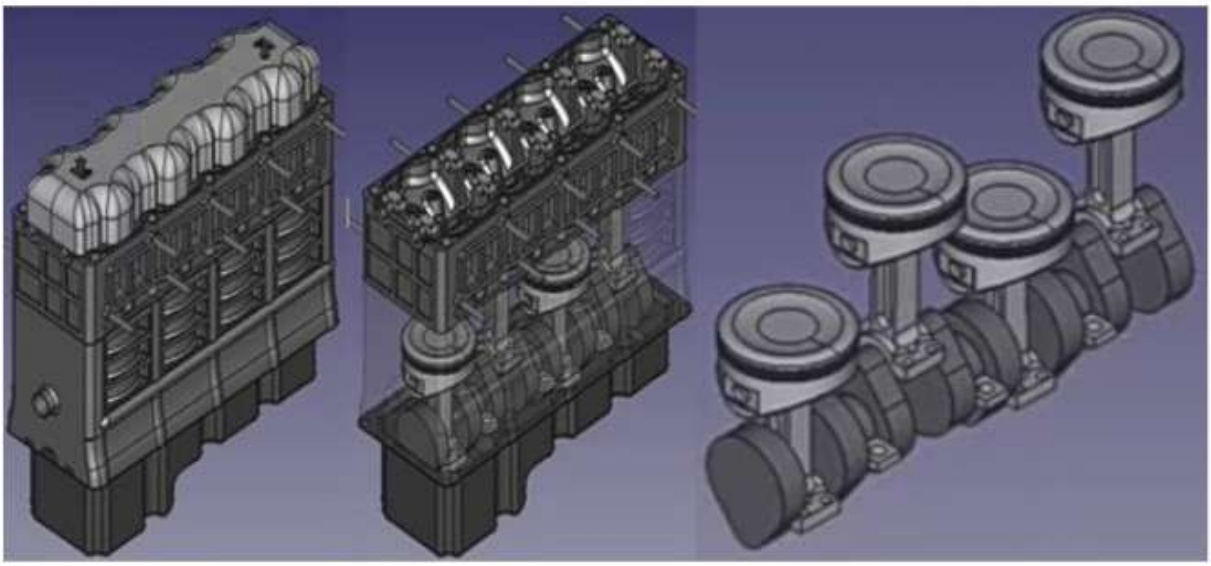

A constructor is a root class like dog and wolf. Specialization make things more alienated. This is why opposites can attract to each other.

Drawing

Here is CAD or wood used. Modules is used to collect methods like those defined in OEIS. The purpose of drawings is to simplify things. Python is more scalable than Haskell. It's like Gimp vs Paint!

Abstract

Here is callstack and report. You chunk problems down and test ideas. This is a priori and I can't describe this without real solutions.

1. Import data from Yahoo Finance and preprocess it to csv.
2. Divide it to a matrix folder. Do a SVM plot with RBF kernel and outliers after processing Z-score.
3. Hyperplane between std and mean will give value of a specific option.
4. You can plot the regression line with LSM and then use RMS.
5. To know time periods you can convert this polynomial to differential equation and solve it with algebraic topology.

How I will write fiction. Unlike what people think, fiction is more difficult than mindless non-fiction. 😜

1) frequency table generator in 3-word unit. "went out to, some of it, I sure do, sure do miss, thing you know, sit down and, you know that's, I listen to, stuff we have, get trapped into, the classical stuff, what I like, yeah that's good, we just planted, yeah sounds nice, I used it, and a plum, planted the plum, do you get, crop of plums, growing in field, get a good, this will be"

2) ranking matrices of this with 5 categories mimicking cognition. Using this to skip-gram for new content from GAN and I will extend this to trading

6. You can start with UCI ML Repo to avoid data wrangling.
7. Black-Scholes model is used instead of (3). Brownian motion with constant volatility. C = S * N(d1) - X * e^(-r * T) * N(d2). 2 strategies is described here.
8. Moving average is calculated by the price of an asset over a specific period, such as the last 10 days. Cycle analysis is calculated by Fourier transforms. Moving & cycles is used instead of (5).

before deep learning with DPG.

3) inspiration from August Strindberg, Jan Guillou, Joe Abercrombie, Harold Coyle, and Tom Clancy. Everything should be done in modern days. From (2) I decide what political current an engineer will join by an accident with the jock Valentine Rossi. Think of the board game Cluedo.

4) hire a ghost writer at last: Estorytellers, Writing Studio, Kindlepreneur, Verblio, MediaBistro, Reedsy, Covisum, Vox, Urban Writers, Kalam Kagaz, Edioak.

I always improve and therefore will update my posts about Categorical translations. This is to make abstractions of experiments. For example what beside algebraic topology is intersecting finance and writing?

Material

Sure the problem is more important. All he needed to fail was rechargeable batteries or powerbanks. But he know piezoelectric as green energy instead of solar panels. His challenge was design and amplifier because nobody can walk several hours. If he had wait until someone discovered quantum or oscillators computing he would been a rockstar. So what is failure? Instead of magazines through Fiverr reviews I will show my design skills here instead of Tumblr. Is this a solution or a problem?

I have discovered partners to my previous question. Smes: crystal, envoy, entelo, socialrecruit, deloitte, accenture, linkedIn talent solutions. Influencer: data collector, octoparse, parsehub or klout, buzzsumo, buzzstream, ninjaoutreach. Seo: alexa, awario, bluekai, hootsuite, liveramp, lotame, netbase quiz, similarweb, sprout social, talkwalker, trackly, visualping. Business fairs, (verksamt, sba.gov), art exhibitions, go-karting, laser tag, rent a horse, middle watch, meetup,

Daniel Å. Jonsson
Jivanmukta with endless energy. · Updated Dec 7

Multitasking at 20 yrs old benefits: Why the Aging Mind Is Driven to Distraction My focus will be 1980+ because of my non-fiction book Hercules in Modern Age. I will create a template from ranking matrices, data wrangling, meshgrids and historical research. In the final step I will hire a ghost writer for clarity check.

"Why are ideas similar to each other regardless of time, space and words? What exactly are inventions and how does it accumulate money or relationships?" ISBN 9789152774113

It was not meant to be "rich-fast" but it would be an encyclopedia for multi-disciplinary observations including soul age=moon phases. Inside it I have a Swedish political debate 2 hours long as 4 st A5 pages. I wrote a spectrum and now after Bard I can write it to Git.

> Bill Bray · 4y
>
> **Who has published the most number of scientific research papers till now?**
>
> I don't know. In fact, I was just writing/wrote a very long response regarding the entropy of science as ...

My intuition gave me the measurement / outcome and my brain will reproduce it. Instead of IMRaD use IDRaM. **This is the new method**. Space content here will be a track record of my modus operandi. In short my ambition is a crossover between determinism and nominalism for choosing heuristics with logical positivism.

The idea behind RST is to describe humans as matrices. This quantifier can be used to calibrate soft science including psychiatry. When finished this can be used by LLM to determine scientific rigor. LHC is a good example of corruption and useless peer reviews. CS is most stable because you can test your guess instantly. Differential evolution work best for random matrices instead of logistic regression. This idea saved me time by excluding betting.

Daniel Å. Jonsson's post in New Scientific Method : corporate success

Daniel Å. Jonsson's post in New Scientific Method : compare every step by tsm

Daniel Å. Jonsson's post in New Scientific Method : categorical translations 2

Daniel Å. Jonsson's post in New Scientific Method : categorical translations 1

How can an explorer grow as Starbucks did?

I ask here because I don't want AI answers as I got from “beside AI". I begin with journals that my advisor AI helped me to explore.

Popular Mechanics: project ideas and gadget reviews. TechCrunch: platform on start-ups, news, and reviews. Ars Technica: similar. Engadget: electronics. TechXplore: robotics. Gizmodo: design blog. ACM: IT news. Hackaday: project ideas. Instructables: similar. Nuts & Bolts: similar.

Starbucks is always refreshing. They used to write customer's names by guessing it. I have been good at guessing people's age. So I have always been similar to Starbucks. My problem has always been to decide what industry I should work at.

Luca Hammer · 4y

Are there any similar services to Amazon Mechanical Turk?

Link: Subscribeable list of 100+ services There are different definitions for crowdsourcing and therefor...

IT jobs is for people under 30 years old. Therefore I need to transfer my skills to another field. This should be the end goal of science. To transfer knowledge. But in it's current shape this is plain wrong. STEM should be renamed to TEM or STEAM. The last real scientist was Michael Faraday. 😔

Timing is everything. Politics don't exist without it. Refaat El-Sayed would survive better if he was honest in his last battle with journalists after convincing Pehr Gyllenhammar. At least what Guillou expect. This is the problem with new rich. They don't see truthful exceptions from corporate bullshit!

My cousin is sales director here in Sweden. 👑 We're both 22 years old. The difference is that I wanted to be a creator. He wanted to be a lawyer. I don't know why he changed his mind. I think I had some influence on him. He wanted this when we were teenagers. When I was 16 years old I switched to technology from chemistry.

Daniel Å. Jonsson's post in New Scientific Method : Here is key people. Don't repeat my artist mistake with Instagram. Play global.

Can you give a comparison between research and science?

Research is a stamp collection. Science is automation. Think of Chess. You read books about tactics. Now you decide to expand yourself with decision trees and binary search. Science would be explicit intuition. Engineering is the communication between us and machines.

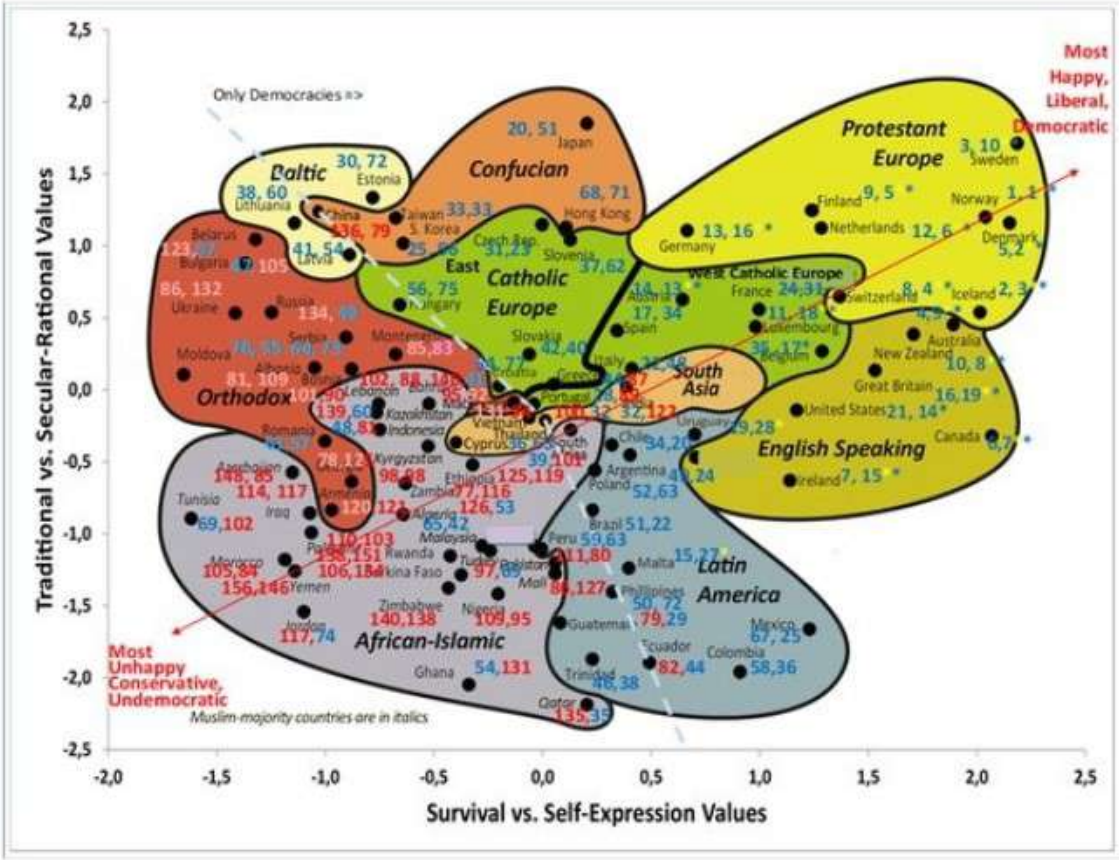

Reverse engineering is to take protocols like http into post, get (science) with proxy (machine). What if you could predict what political party someone would vote without asking them? This is explicit psychology as protocol to machines. Also what if you could measure your writing style to right or left audience?

Firebird, Colin Mason, AU senator. words count, unique words, whitespace, 7 words per sentenc, letter sum, mean, line sum. common, exception.

1 (1714, 399, 263), (2181, 6, 2529), 155, 50
2 (1711, 399, 237), (2122, 6, 2398), 152, 38
3 (1794, 399, 256), (2517, 6, 2866), 160, 52
4 (1747, 399, 252), (2402, 6, 2783), 151, 57
5 (1742, 399, 239), (2430, 7, 2793), 150, 50
6 (1741, 399, 256), (2496, 6, 2778), 165, 45
7 (1942, 399, 268), (2276, 7, 2740), 172, 65
8 (1732, 380, 264), (2168, 6, 2452), 162, 37

12 is 55.47 kB or 27735 wc or 14123 by 1.964 348/6 = 58/7 = 8 | 45 /6 = 7, A, 2311 wc. 276 / 6 = 46 => 7 | 48 /6 = 7, A, 3 files. 349 => 58 => ~8 | 37 => ~5, Z, 4 file. 381 => 64 => ~9 | 39 => ~7, D, 6 files. 363 => 52 => ~7 | 60 => ~9, D. 282 => 47 => ~7 | 12 => ~2, J, 10 file. 464 => 66 => ~9 | 74 => ~11, T. 284 => 47 => ~7 | 62 => ~9, D, 12 files.

Probability scores to functional equation to best represent word count, 55=0.16, 152=0.14 with c=0.35. b = 0.002a + 0.136 * c where c is 0.35, 0.32, 0.33, 0.38, 0.34, 0.3, 0.31, 0.35 | âˆ†ca = 0.002a, a/b.

Previous examples like rms table, debate and word order syntax. best: atg 15 zjz 49 = 64 - 3 tzt or jtt, zaa 32. psyk: zjt 55 zgj 45 tzg 55 = gzz, zzz, jzz 52. mean: tgt 61 jzj 47 aga 38 = zjz, gat, gjz, azt, jat, ajt, taz, ggz 49 or agj, ggj, jgz, gag, ggg, zag, gjg, tza, jzj, zgg, zgz 47.

OVS = atgz 7:15, tja 8:45, zga 10:39, atj 10:21, zgt 57. First 3 is best. Unit translation to scalars. Think of meters to centimeter, kilometers and so on. SE: S tjaz, V tzag, SD atgz, M+C taz, L tzagj, K zgj. Unit-18: 11, 15, 21, 11, 9, 15, 11. RMS: MC 49, VL 47, SD 15+45, K 45, S 39+45. Colin: MC 4, L 11, V 12, SDK 2, S 6.

Function S=11:39:6, V=15:47:12, SD=21:15:2, M=11:49:4, C=9:49:4, L=15:47:11, K=11:45:2 Equation c = 0.001a^2 + 0.12a + 3.5, a:b=0.83, a:c=0.84, b:c=0.9,

SE: S is related to V and SD in a similar way, while M+C is related to L in a similar way. RMS: MC is related to V+L in a similar way, while SD is related to K in a similar way. Colin: MC is related to L in a similar way, while V is related to SD and K is related to S.

Discrete was 2nd attempt when matrix failed.

0.33, 0.38, 0.34, 0.3, 0.31, 0.35 | a^1ca = 0.002a, a/b.

56=0.16, 15=0.078, 18=0.084, 13=0.074, 1=0.001; 14=0.071, 16=0.076, 27=0.098, 49=0.14, 9=0.06; 53=0.15, 21=0.087, 13=0.01, 19=0.084, 6=0.057; 58=0.167, 10=0.07, 7=0.07, 17=0.086, 4=0.06; 16=0.084, 49=0.15, 7=0.065, 18=0.087, 8=0.07; 14=0.07, 28=0.097, 12=0.07, 18=0.077, 50=0.14; 53=0.15, 10=0.06, 26=0.09, 18=0.08, 11=0.07; 20=0.087, 6=0.06, 8=0.06, 17=0.08, 56=0.16; 56=155, 49=152, 53=160, 58=151, 49=150, 50=165, 53=172, 56=162; zjgta, atgzj, zgatj, ztjga, tzagj, jgtaz, zjgat, tjagz; zgjta, zgtaj, zgtaj, zgtja, zgtja, zgajt, zgatj, ztgaj; 7=zgjta (equilibrium), 8=zgtja, 10=zgatj (music chorus).

Discrete was 2nd attempt when matrix failed. D=(4,5,6,7,9), C=(0.3,0.5,0.6,0.7,0.9) S: 0.001a ^2 + 0.12a * 0.83 = 6. Solving a = â^š(6/0.001 + 0.1008) = â^š(6000 + 1008) = â^š7008 = 84 .2 V: 0.001a^2 + 0.12a * 0.84 = 12. Solving a = â^š(12 / 0.001 + 100.8) = â^š1308.8 = 36.2 SD: S: 15, 1.4, 5. V: 26, 2.5, 8. SD: 26, 1.9, 7. M: 20, 1.9, 8. C: 20, 1.9, 8. L: 31, 3, 8. K: 3, 0.2, 7. S cm, V cm, SD c, M c, C c, L cm, KD d. rest => dust (0), cest (1). V-L-S-C-M-SD-K : MC = 1 dust (duo), VL = 1 cest (10/1.33). 2 (0.3, 0.7, 0.9), 4 (0.3, 0.5, 0.6, 0.7, 0.9) vs (0.9), 10 (0.5, 0.7, 0.9, 1.1, 1.2, 1.4, 1.6).

RST=HTTP, DUST=POST, CEST=GET. False analogy can be useful. I know that I should use trigrams to identify nodes. Here is AI feedback.

Repo is RZ with 5 values. It has 2 higher units. DG is 2x RST while CW is 10x like deci-meters. Why I think CW (trigrams) is like GET is because it could be identified directly with fiction from senator while DG is like headers to describe content (fractional

The RZ, DG, and CW components of the repo can be seen as different levels of granularity in the feedback process. RZ provides the most general feedback, while DG and CW provide more specific feedback. For example, RZ might tell you that your writing is too formal for the audience, while DG and CW might tell you that you need to use more contractions or slang.

The analogy between RST, DUST, and CEST is a bit more complex. RST is the root-to-surface transformation, which is a process of transforming a deep-level representation of meaning into a surface-level representation of language. DUST is the distributional semantic unit of text, which is a representation of meaning based on the co-occurrence patterns of words. A better analogy would be to say that **RZ** is like **the framework** that provides the foundation for **DG** and **CW**. **DG** is like **the specific details** that are used to build upon the **framework** of **RZ**. Finally, **CW** is like **the feedback** that is used to evaluate and improve the **specific details** of **DG**.

AMAN GOEL

PRESENT ADDRESS
Hostel 3, Room number 137
Indian Institute of Technology Bombay
Mumbai - 400076, India

CONTACT
amangoel@cse.iitb.ac.in
amangoel@iitb.ac.in
(+91)[redacted]

EDUCATION

Bachelor of Technology, Computer Science and Engineering (July 2013 - Present)
Indian Institute of Technology, Bombay GPA 9.86/10

Intermediate, **Central Board of Secondary Education** (May 2013)
Dayanand Dinanath Education Centre 93.6%

Matriculation, **Indian Certificate of Secondary Education** (May 2011)
Dr. Virendra Swarup Education Centre 97.4%

ACADEMIC ACHIEVEMENTS

Credentials

- **Ranked 5th** in the department of Computer Science and Engineering and **7th in the institute** (2014)
- **All India Rank 33** in JEE Advanced among 0.15 million candidates (topper of IIT Kanpur Zone) (2013)
- **99.96 percentile** in JEE Main among 1.5 million candidates with All India highest score in chemistry (2013)
- **All India Rank 113** in KVPY (Kishore Vagyanik Protsahan Yojna) (2013)
- Pursuing a **minor degree in Statistics** - completed the introductory course in Probability Theory (2014)

Distinctions and Awards

- **Institute Academic Award** for outstanding performance in the academic year 2013 - 2014 (2014)
- Awarded **AP grade for exceptional performance** in all 3 Mathematics (Calculus, Differential Equations and Linear Algebra) , Physical Chemistry and Engineering Drawing courses (2014)
- **CBSE Certificate of Merit** for being in the top 0.1% in Physics (2013)
- Conferred with the **title of Amul VidyaShree** for being the school topper (2011)

Olympiads

- Among the **top 8** who were selected to represent India at the 14th Asian Physics Olympiad (2013)
- **Gold medal** and **Merit Certificate** for being among the top 35 of the country in Indian National Physics Olympiad (2013)
- Among the **top 40** of the country to have cleared Indian National Chemistry Olympiad (2013)

KEY ACADEMIC PROJECTS

Gale Shapley Seat Allocation (Autumn 2014)
Professor Sharat Chandran, CSE Department, IIT Bombay

- Studied the **Gale-Shapley algorithm** for finding a stable matching and implemented the same in **Java**
- Used the implementation of the algorithm to solve a practical seat allocation based problem
- Took care of the implementation of the reservation system existing in the seat allocation mechanism - including Foreign and Defence Quota

Django Web app (Autumn 2014)
Professor Sharat Chandran, CSE Department, IIT Bombay

- Developed a **Python** based web application using **Django Framework** which included a real-time interface for filling programme preferences for an institute
- Implemented features like cut-off analysis, rank prediction, available branches and past year data analysis

Unit Canonicalization and Country Idenification Module (Autumn 2014)
Professor Ganesh Ramakrishnan, CSE Department, IIT Bombay

- Made a small scale **machine learning** based project in **Python** which involved **database management**
- Developed a program that could read pure English sentences and make statistically useful conclusions using **hypothesis testing** and **confidence interval estimation**

Rube Goldberg Machine (Autumn 2014)

Professor Sharat Chandran, CSE Department, IIT Bombay

- Used **Box2D** Physics Simulation Engine to create a Rube Goldberg Machine in **C++** involving objects like pendulums, balls, dominos and candles
- Added features like **dynamic frame rate**, modifying gravity and altering density of objects

Tetris (Spring 2014)

Professor Rushikesh Joshi, CSE Department, IIT Bombay

- Developed a game of Tetris in **C++** using **Fast Light Tool Kit** library
- Tetris blocks falling automatically, which can be rotated in the desired direction
- Score board implementation with **automatic update mechanism**

Tank Shooting Game (Autumn 2013)

Professor Supratim Biswas, CSE Department, IIT Bombay

- Developed a tank shooting game in **C++**
- Used **simpleCPP** library to implement graphics, including gradient
- Used the concepts of Projectile motion

SOFTWARE/PROGRAMMING SKILLS

- ***Languages*** : C, C++, Java, Python, Haskell, Prolog, Bash Scripting, Arduino coding
- ***Web Development*** : HTML, CSS, JavaScript, Django
- ***Softwares*** : LaTeX, Adobe Flash, Scilab, GNUplot, InkScape

INTERESTS

- Data structures and Algorithms, Discrete Mathematics, Statistics
- Blogging, Mentoring, Debating, Puzzles (Rubik's Cube)

RELEVANT COURSES UNDERTAKEN

- ***Core courses*** - Data Structures and Algorithms (+ lab), Discrete Structures, Data Analysis and Interpretation, Software Systems Lab, Abstractions and Paradigms in Programming (+ lab), Computer Programming and Utilization, Digital Logic Design (+ lab)*, Design and Analysis of Algorithms*, Logic for Computer Science, Computer Networks (+ lab)*
- ***Non-core*** - Linear Algebra, Differential Equations, Calculus, Quantum Physics and applications, Electricity and Magnetism, Introduction to Electrical and Electronic Circuits, Introduction to Probability Theory, Stochastic Processes and Derivative Pricing*

The * marked courses would be completed by April 2015

POSITIONS OF RESPONSIBILITY

- **Teaching Assistant** for the course MA105 (Calculus) - Responsible for teaching and evaluating a group of 42 first year students under Professor Ravi Raghunathan (Mathematics Department, IIT Bombay) (2014)
- **Mentoring IIT-JEE aspirants** through my blog www.amangoeliitb.blogspot.com (with over 1000 page views per day and a peak of 2300 page views in a single day and over 0.3 million total page views)
- Member of Organizing Team of **Techfest** , IIT Bombay (2014 - present)
- **Convener** at the Rubiks Club, IIT Bombay (2014 - present)

EXTRA-CURRICULAR ACTIVITIES

- ***Blogging*** - approached by the famous Wiley publishers (the publishers of Resnick Halliday and Solomons Fryhle) to write for their blog and currently a blogger at **Wiley Publishing Inc.**
- ***Speed Cubing*** - solved the Rubiks cube in **20.769** seconds at CubeMania (Techfest 2014), organized by World Cube Association at IIT Bombay
- ***Robotics*** - Awarded Certificate for being the best Robotics activity student in school. Stood 4th in **Arduino programmed Automated Line Follower**, organized by STAB at IIT Bombay
- ***Programming*** - Awarded Certificate for being the best Computers activity student in school
- ***Website Development*** - participated in WebTech, Comfest 2009)