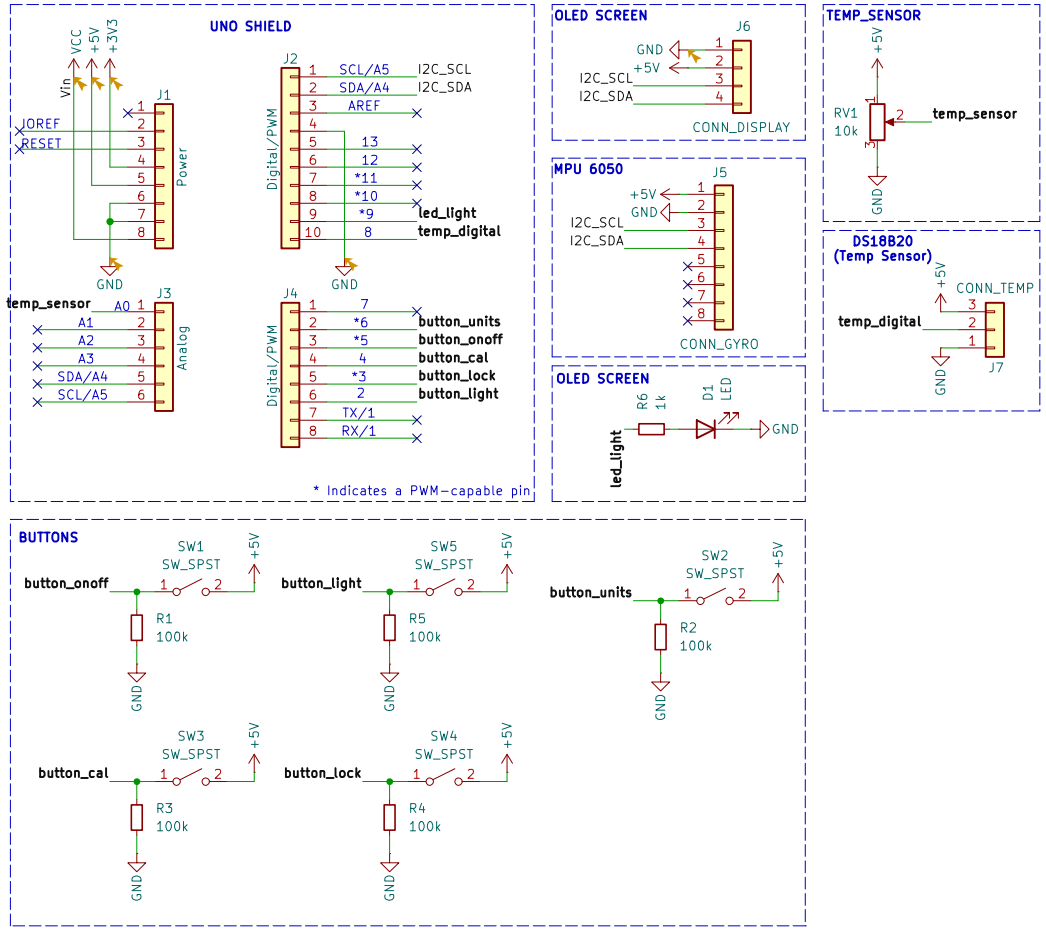

Braidyn Sheffield

Sheet: /

File: Uno_Shield_ThermoPro.kicad_sch

Title: Uno Shield ThermoPro

Size: A4	Date: 2025-01-27	**Rev: 1.0**
KiCad E.D.A. 8.0.8		Id: 1/1