Foundations of Robotics

Robot Basics & Movement

brain eating machines

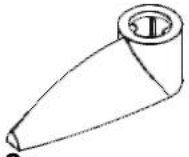

2x
x346
White

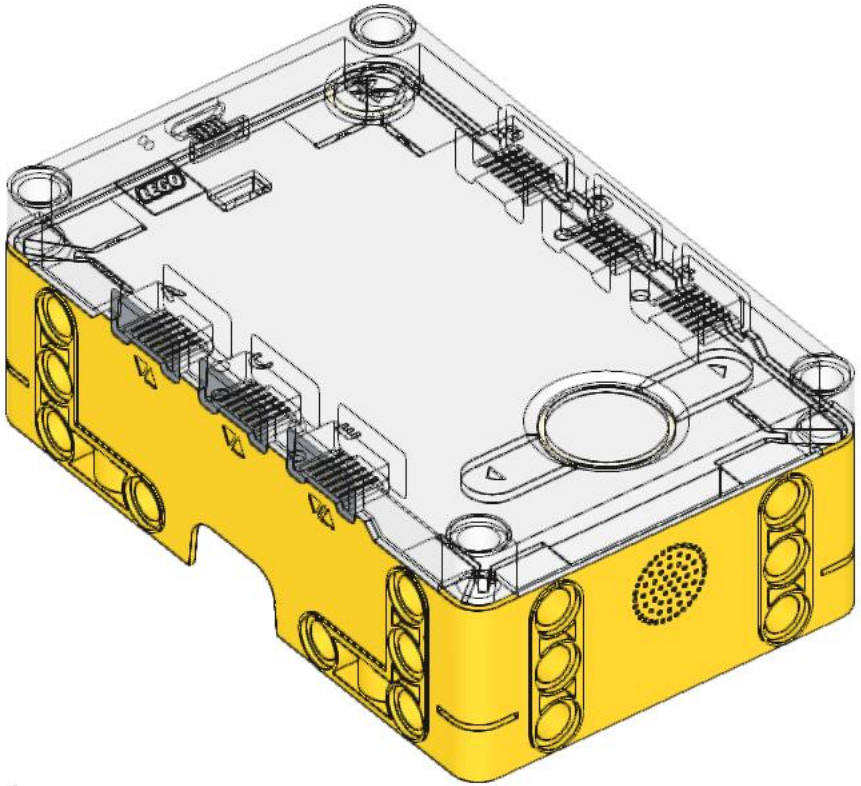

1x
53444c01
Yellow

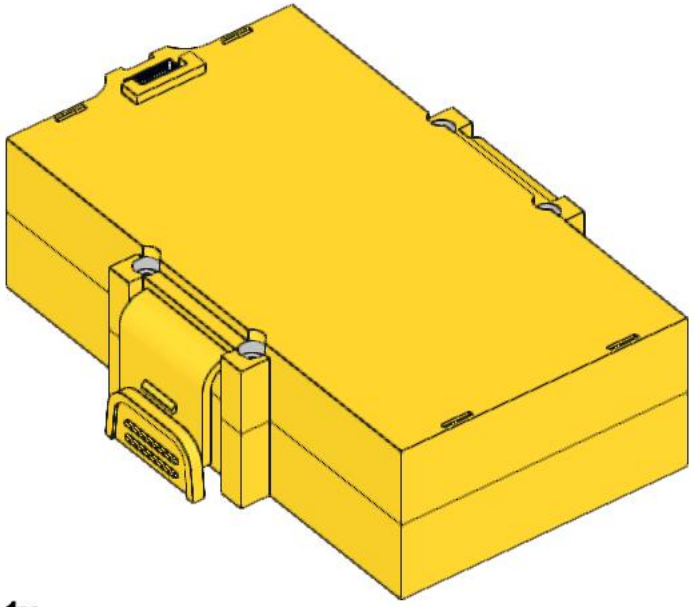

1x
55422c01
Yellow

brain eating machines

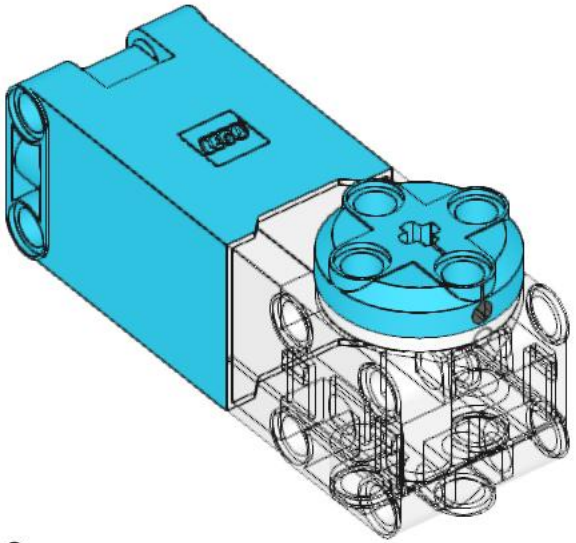

2x
54696c01
Medium Azure

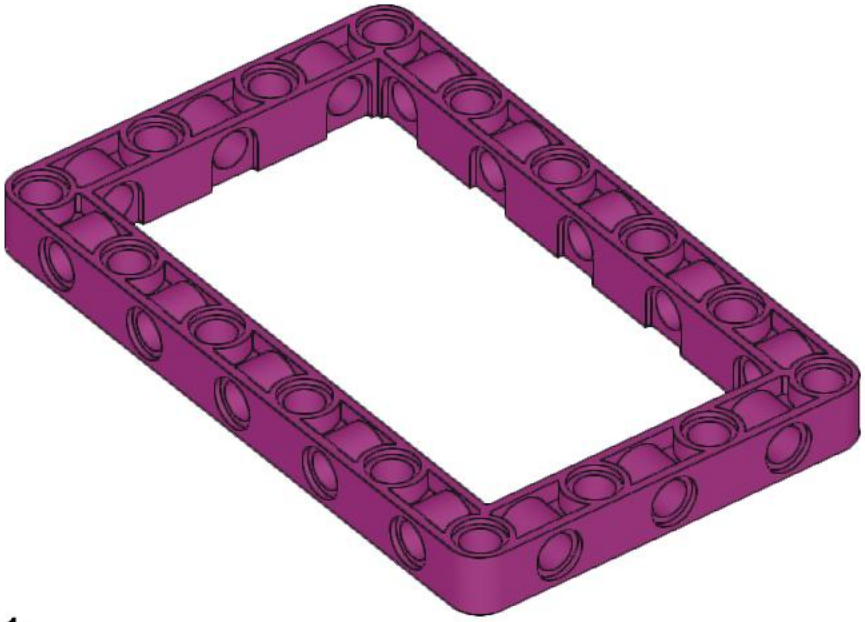

1x
39794
Magenta

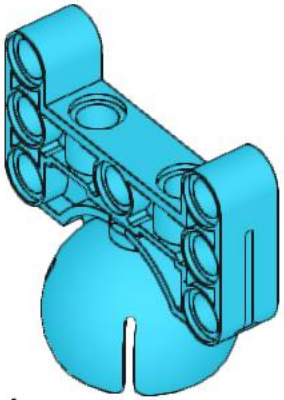

1x
39370
Medium Azure

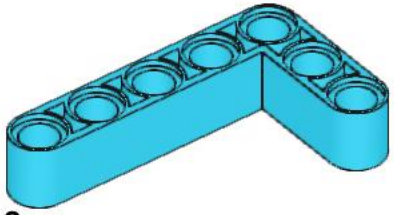

2x
32526
Medium Azure

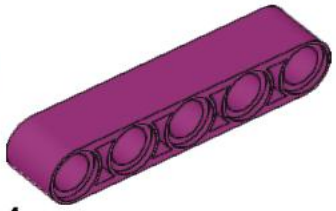

4x
32316
Magenta

2x
39793
Magenta

2x
3705
Black

brain eating machines

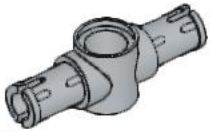

1x
87082
Light Bluish Gray

8x
6558
Blue

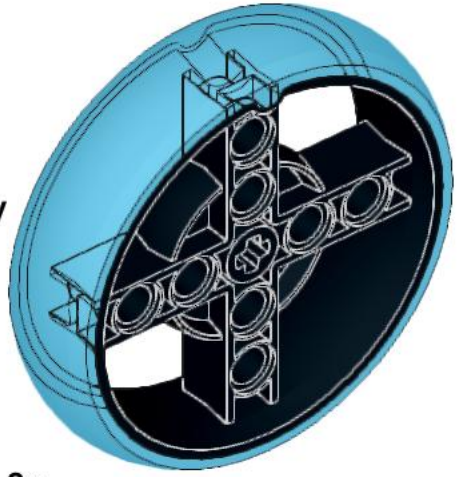

2x
39367pb01
Black

12x
2780
Black

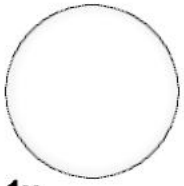

1x
52629
White

2x
3713
Light Bluish Gray

brain eating machines

1

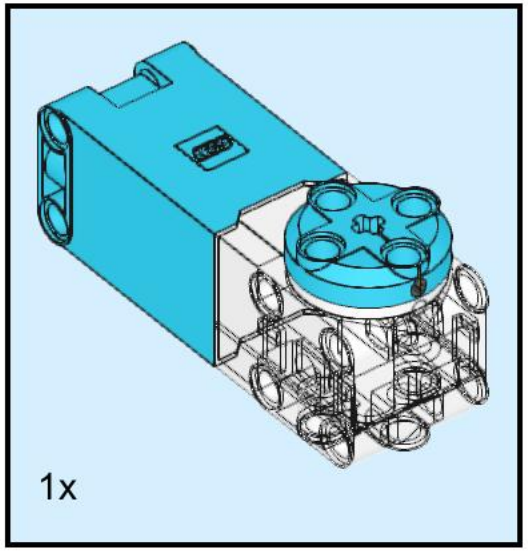

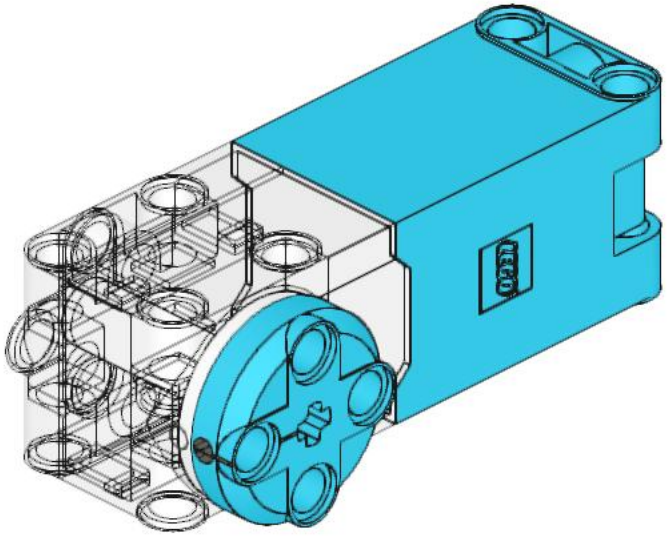

brain eating machines

2

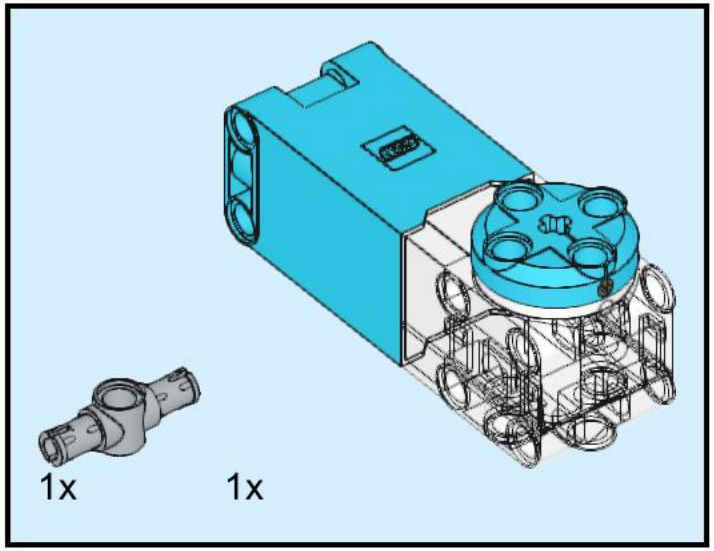

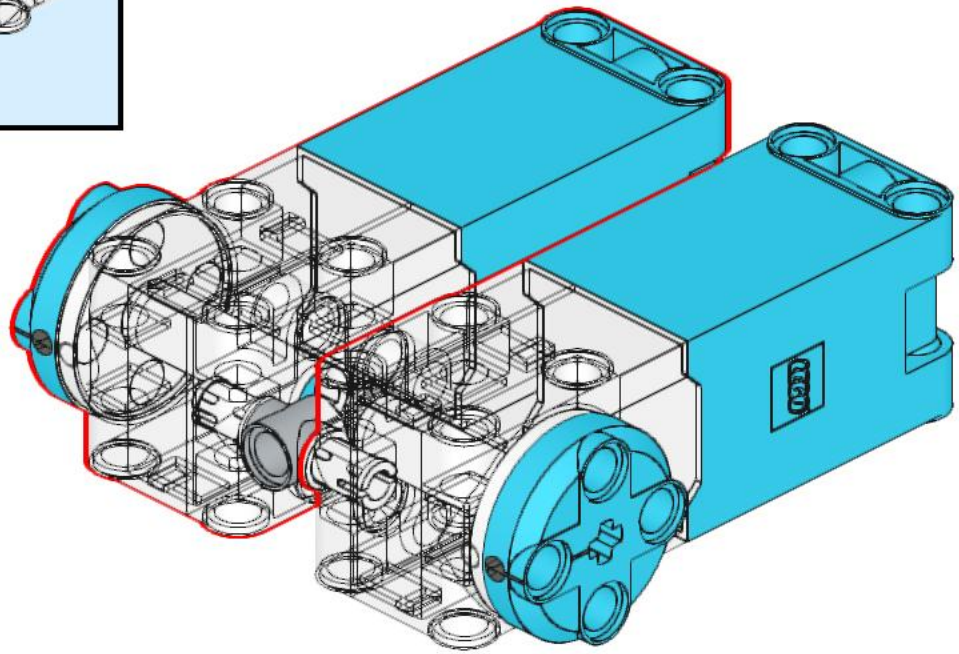

3

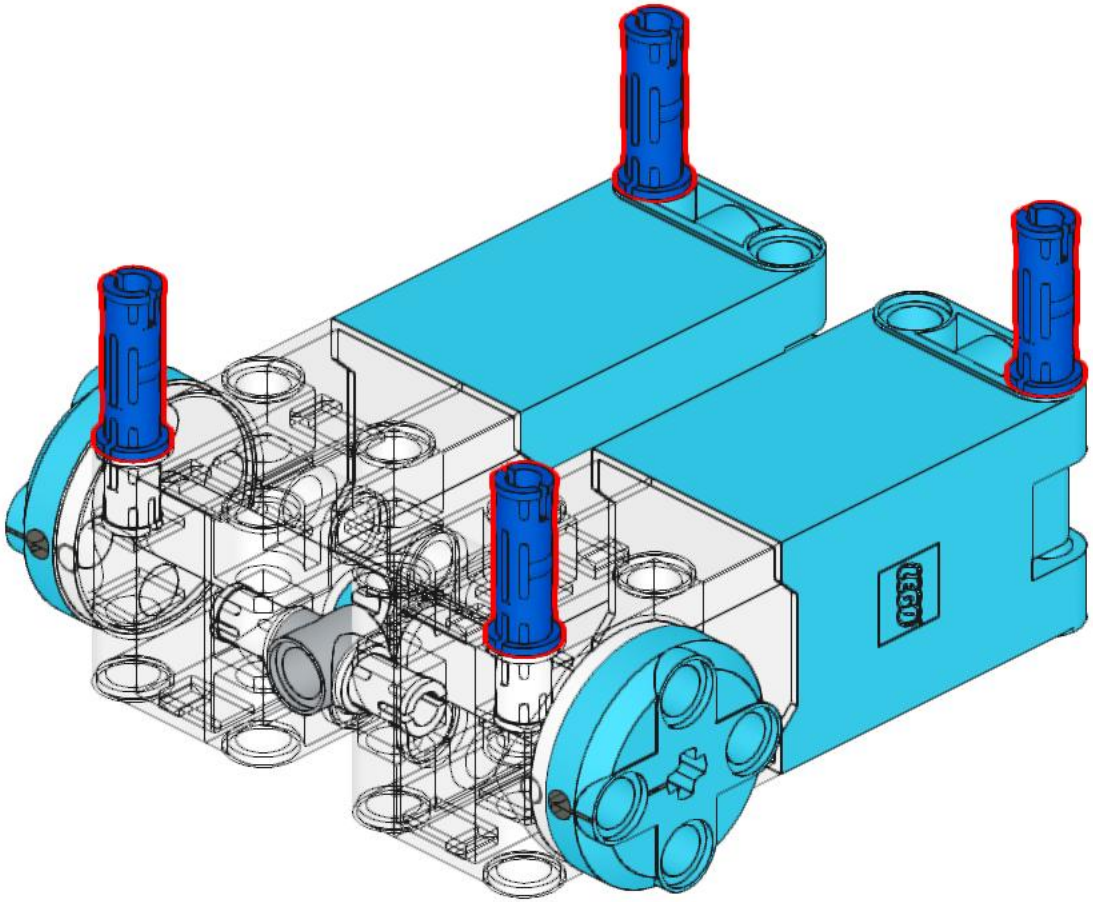

4

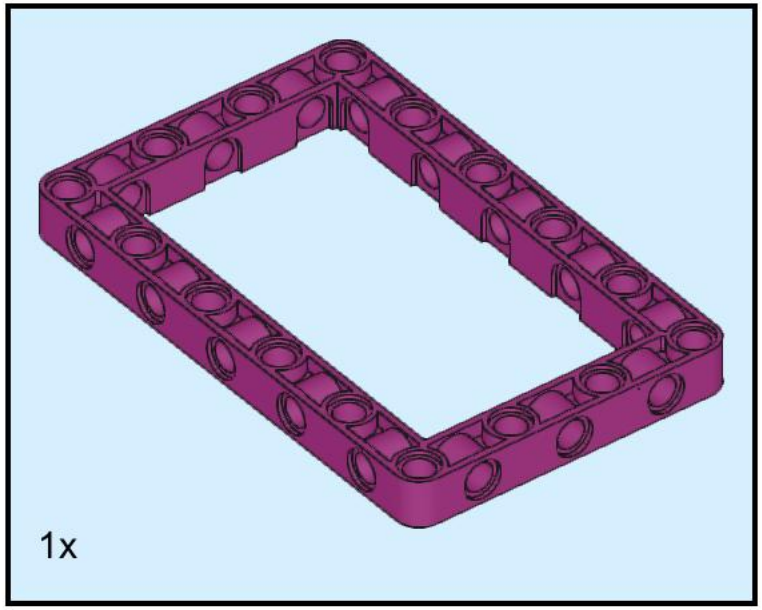

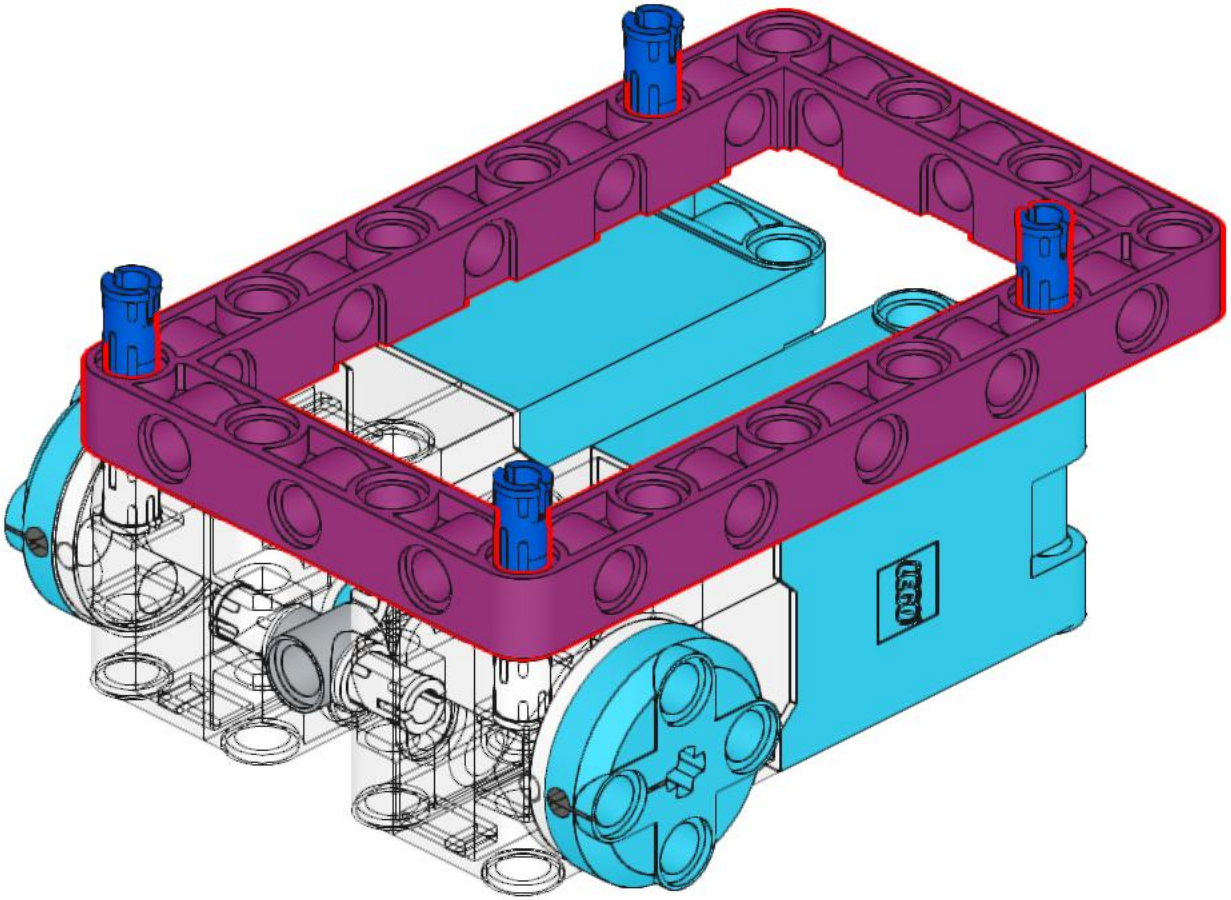

5

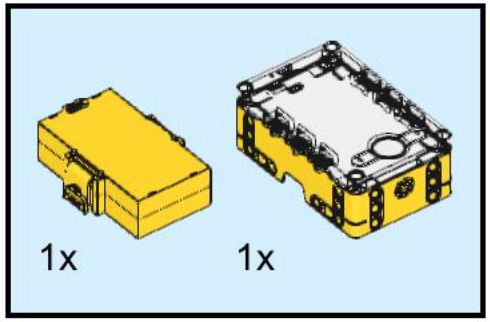

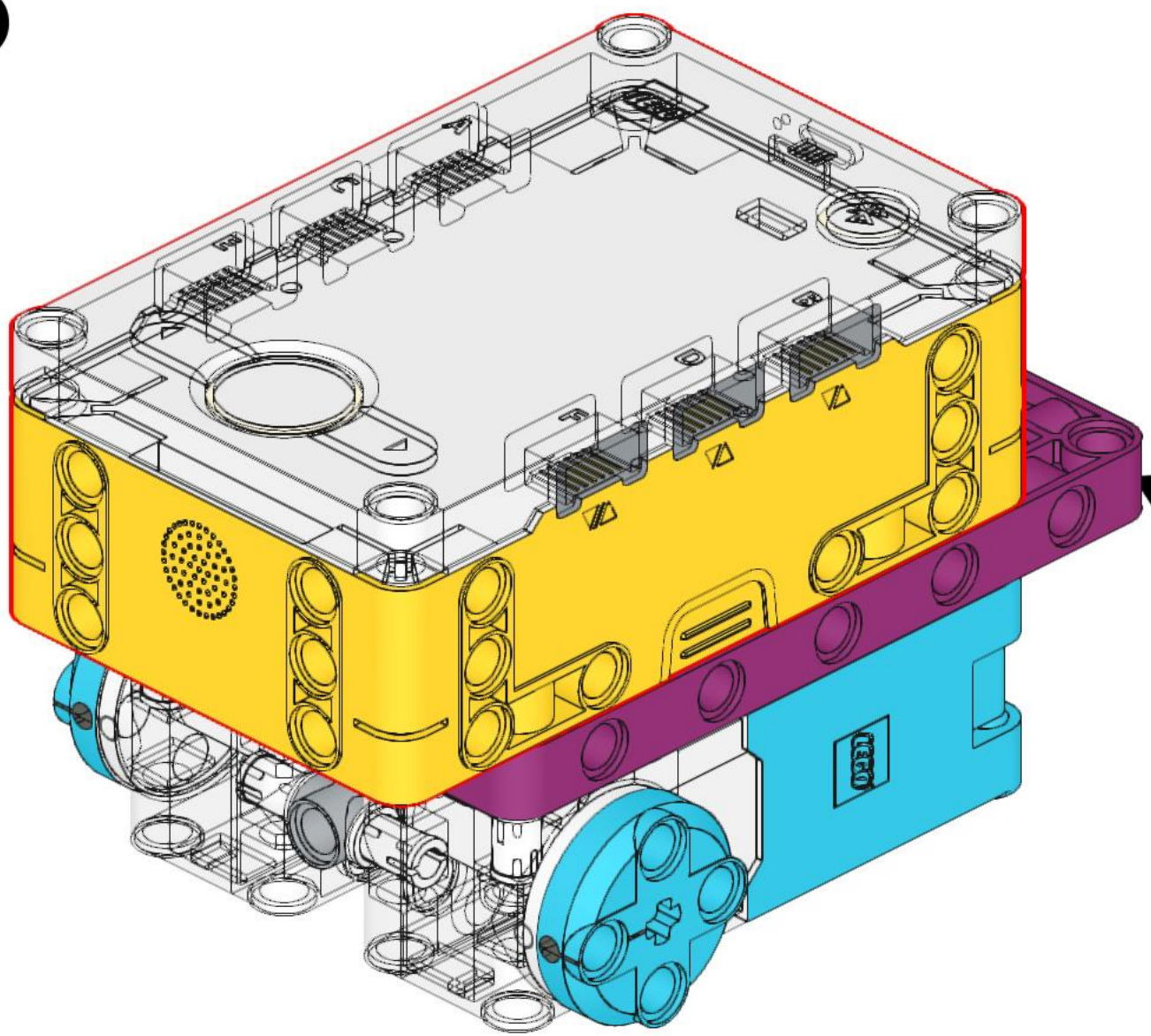

Make sure you have 1 line on the pink slide visible

6

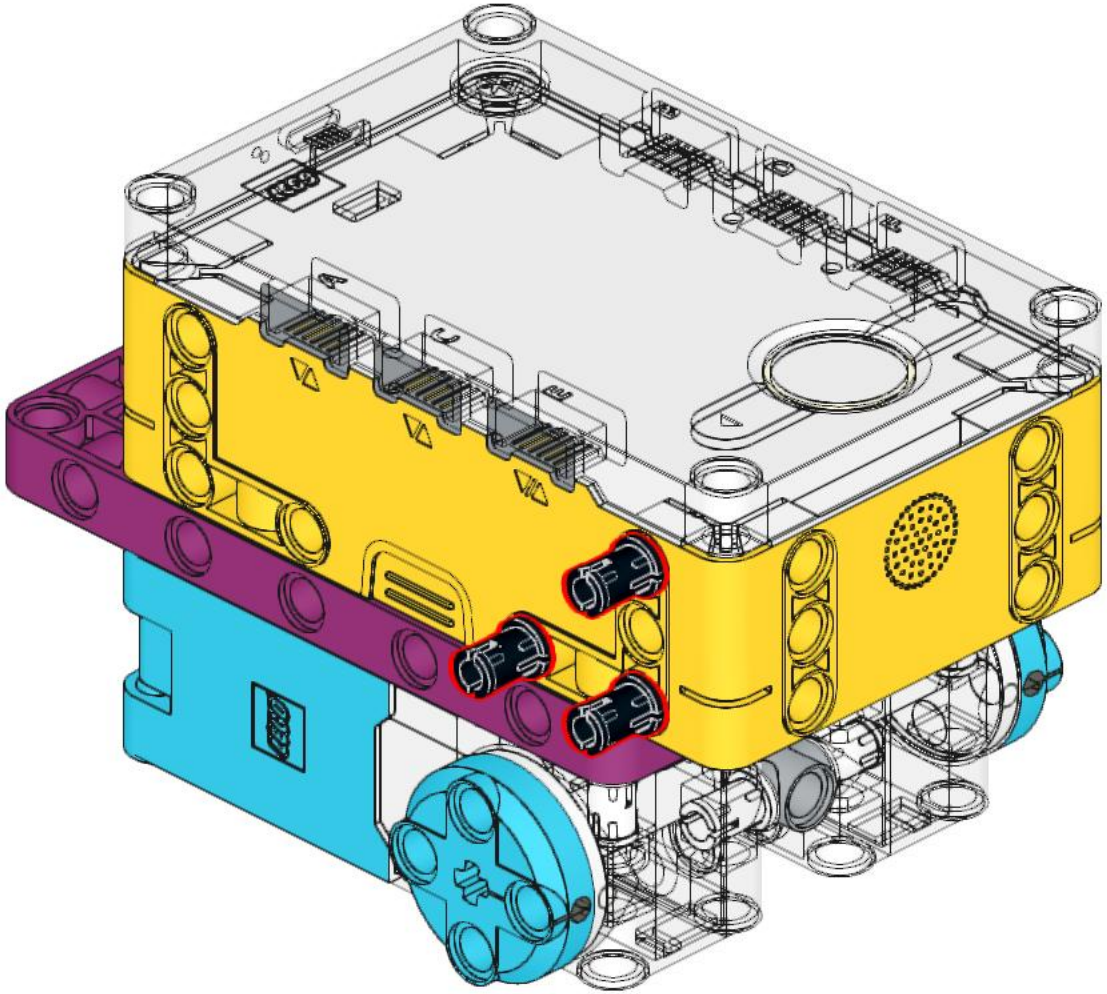

7

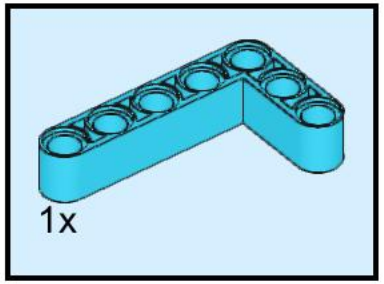

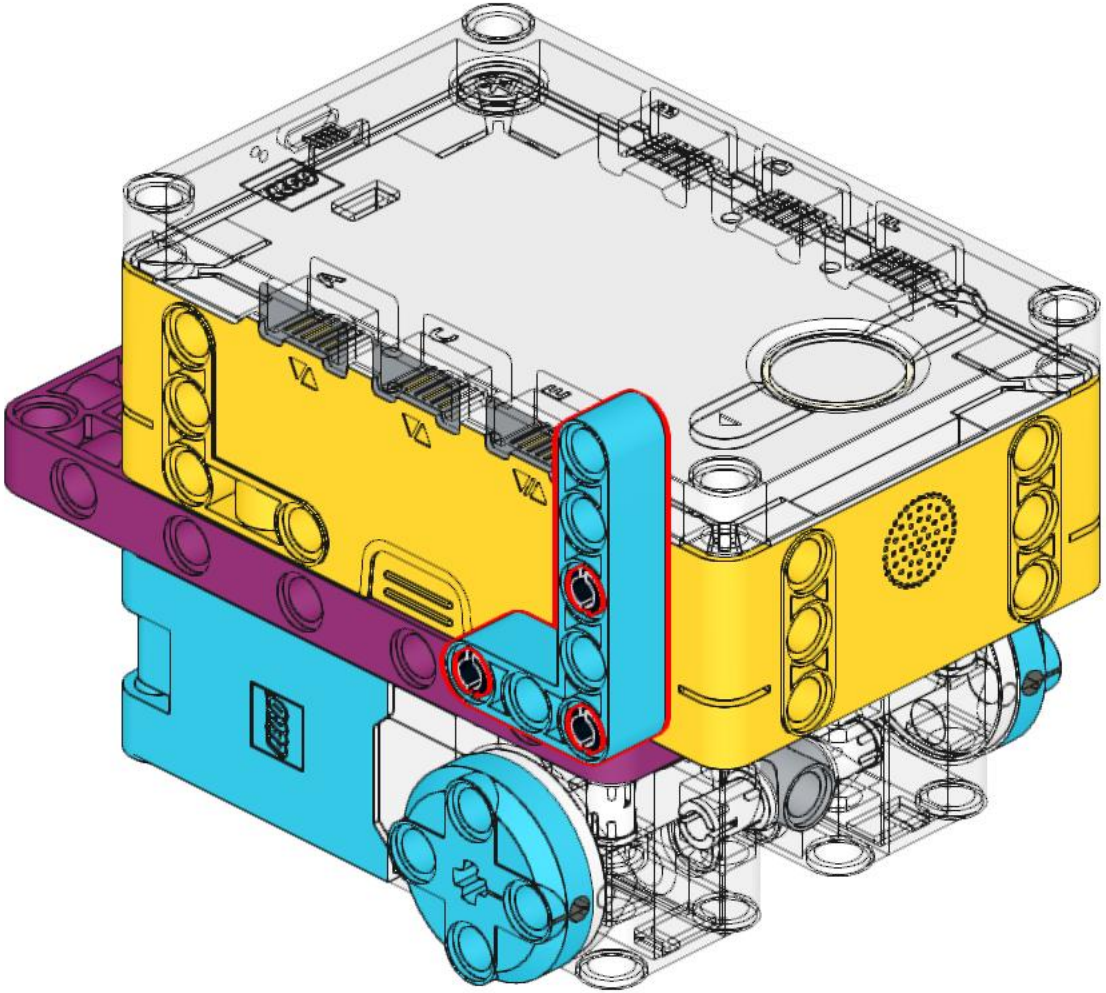

8

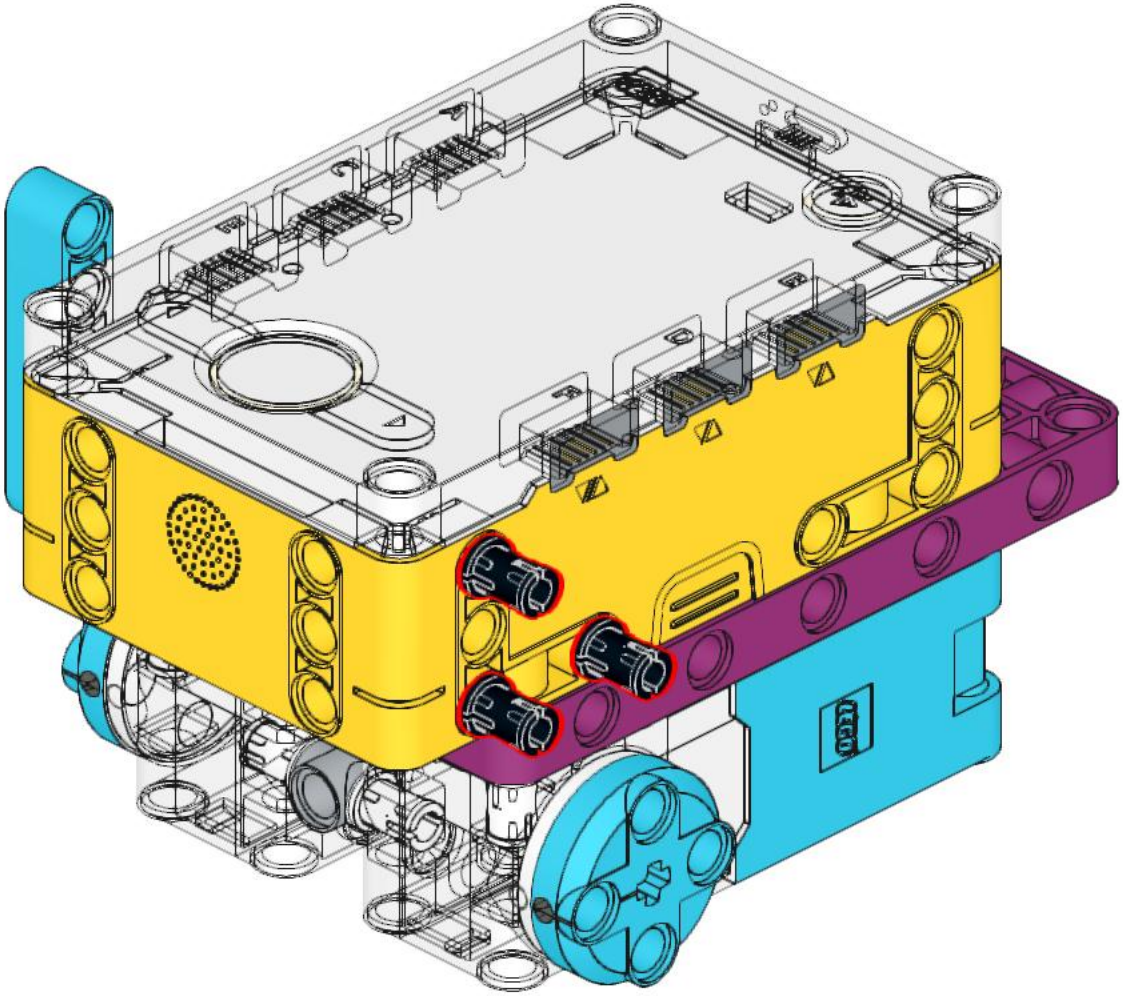

9

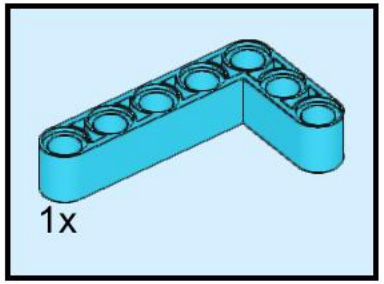

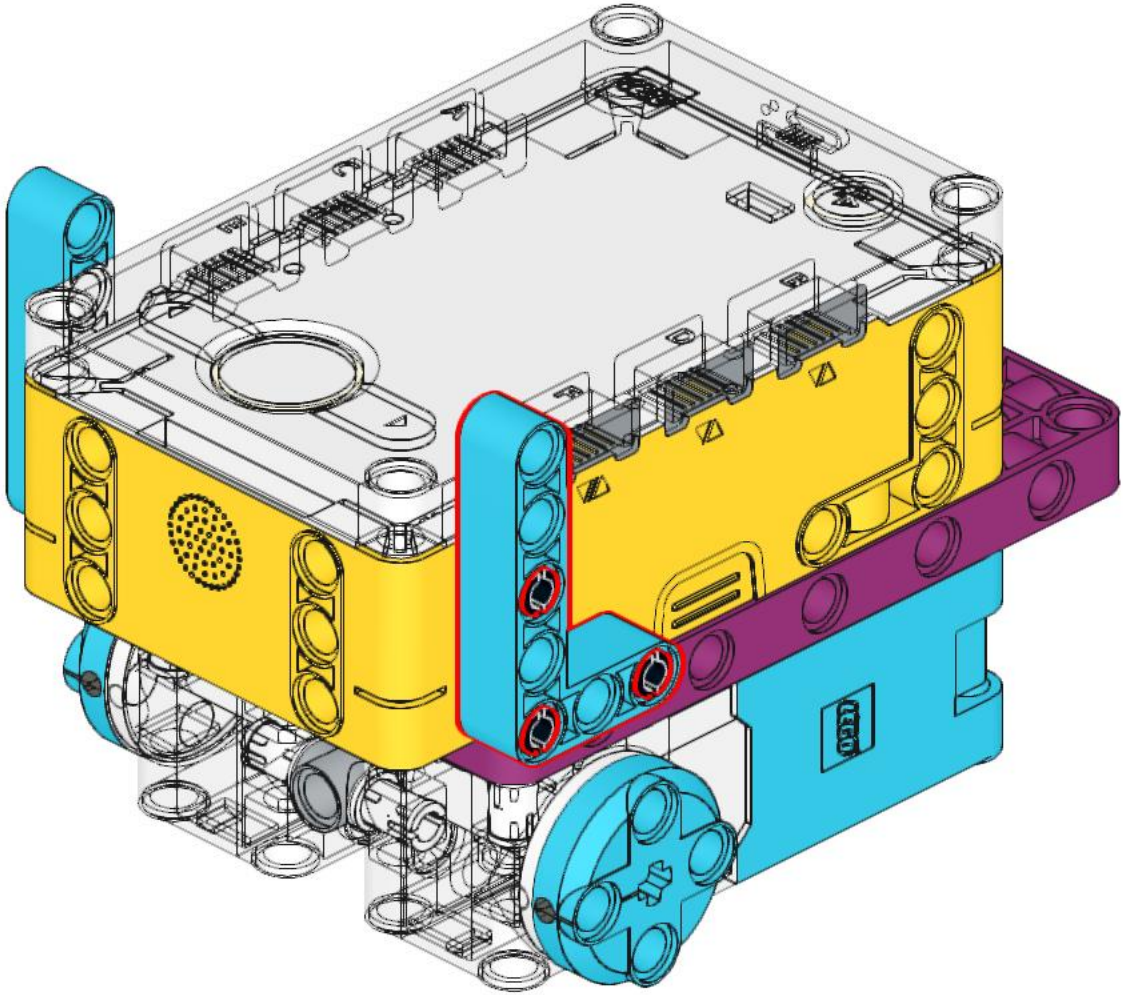

10

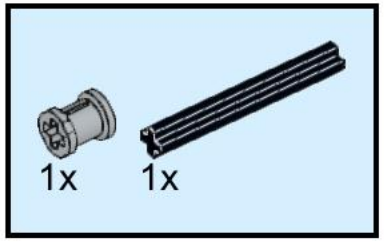

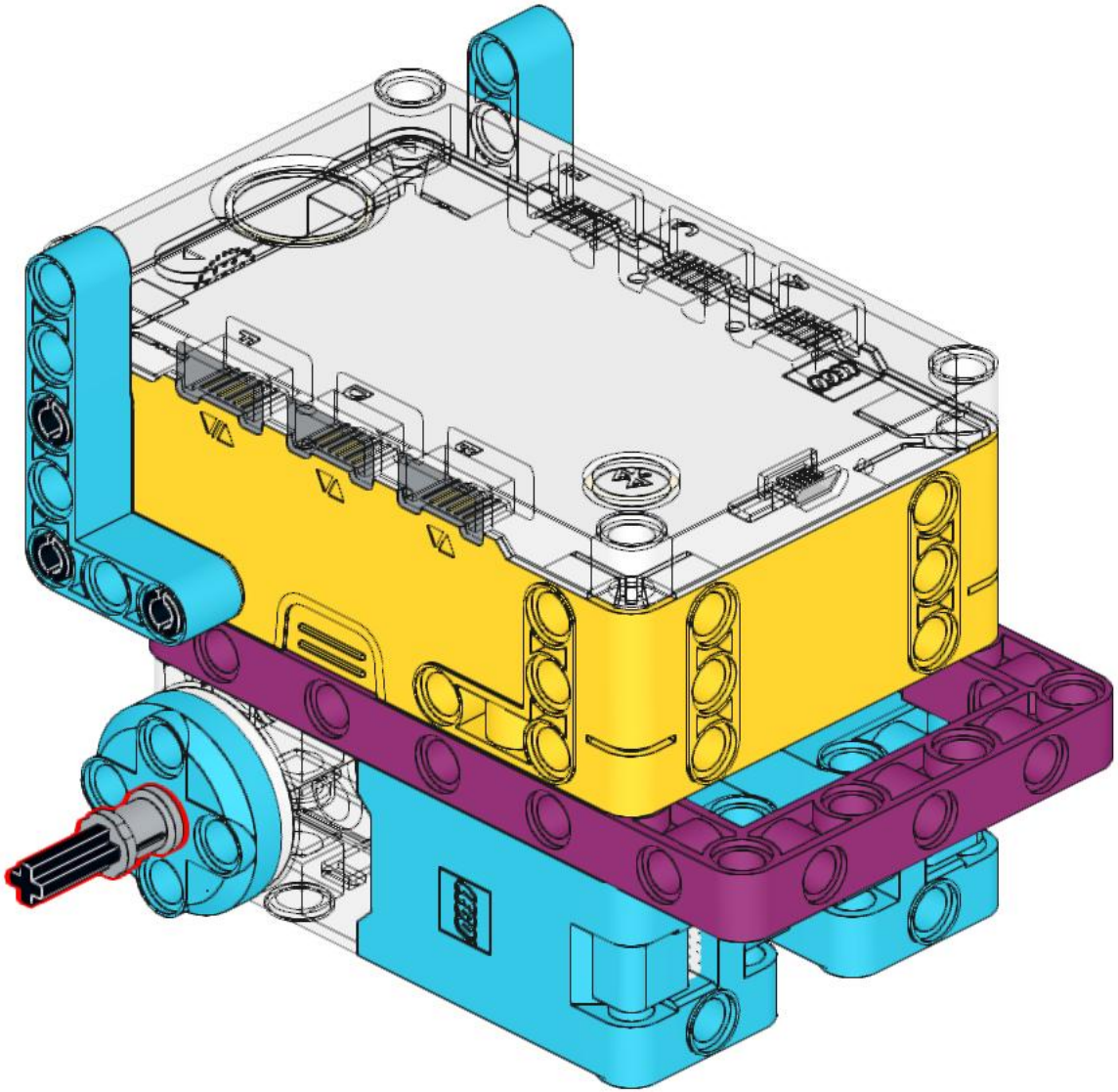

11

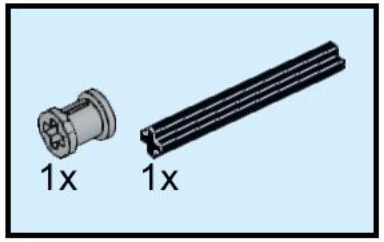

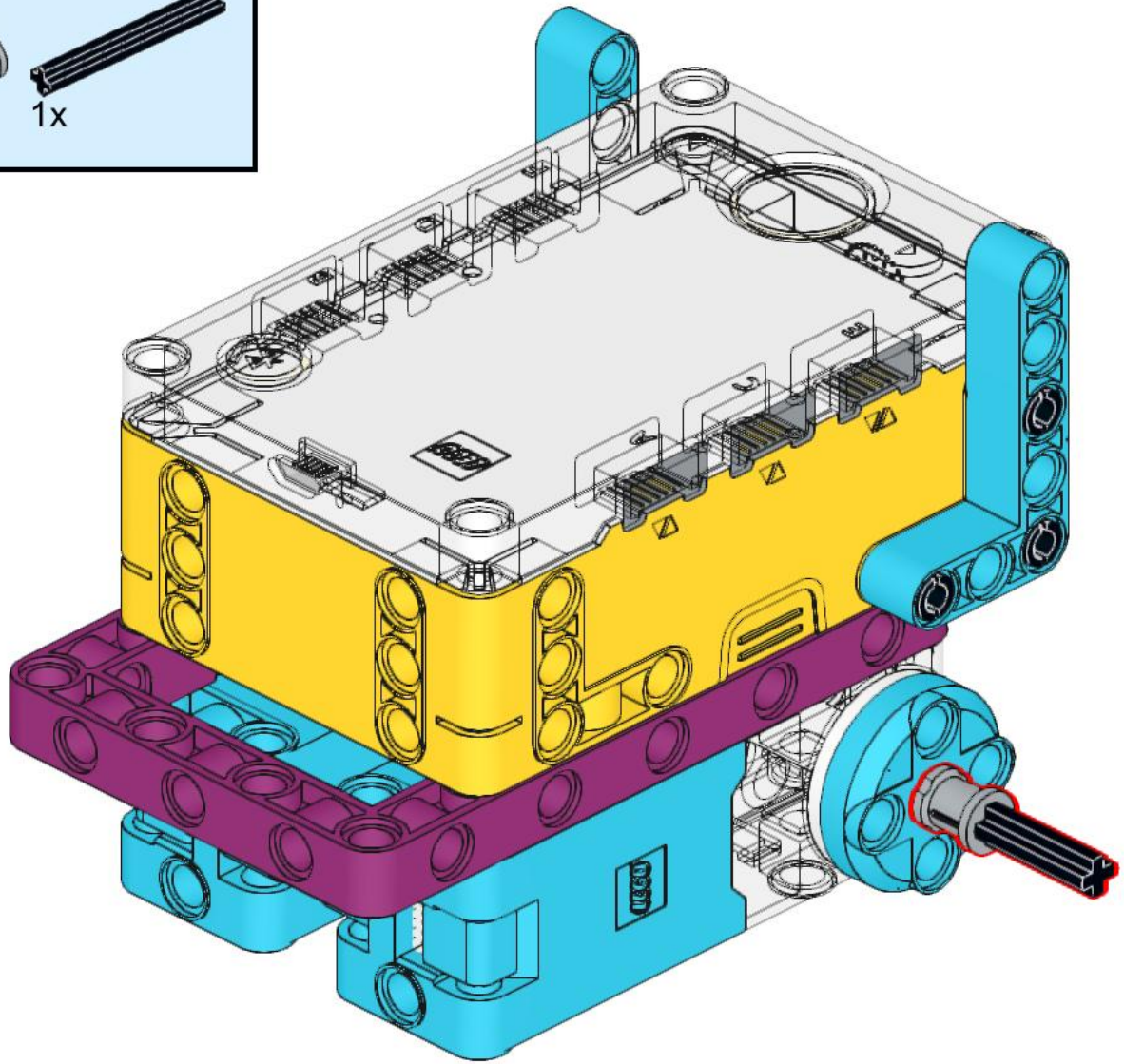

12

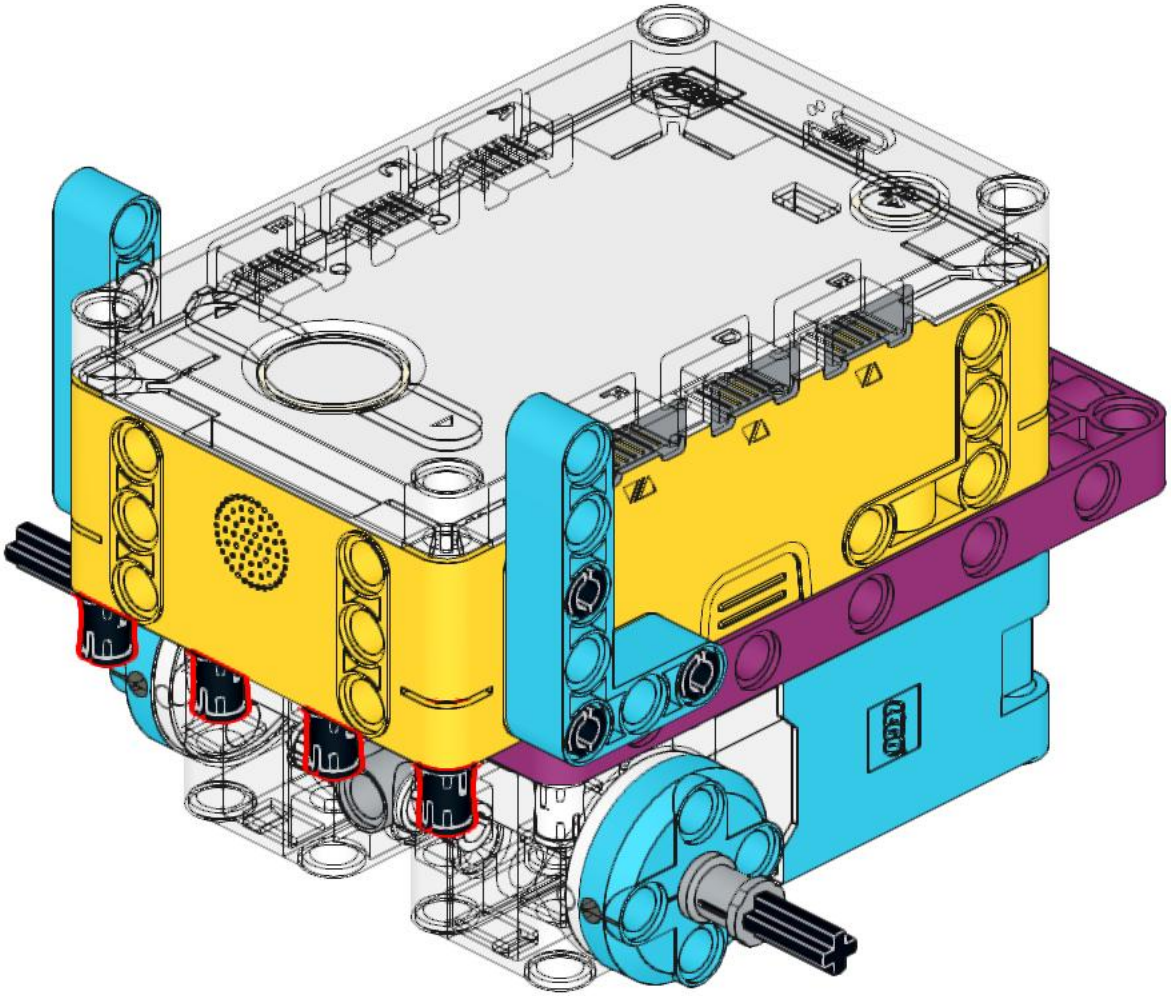

13

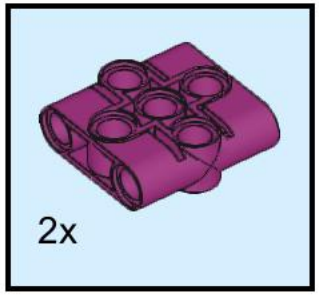

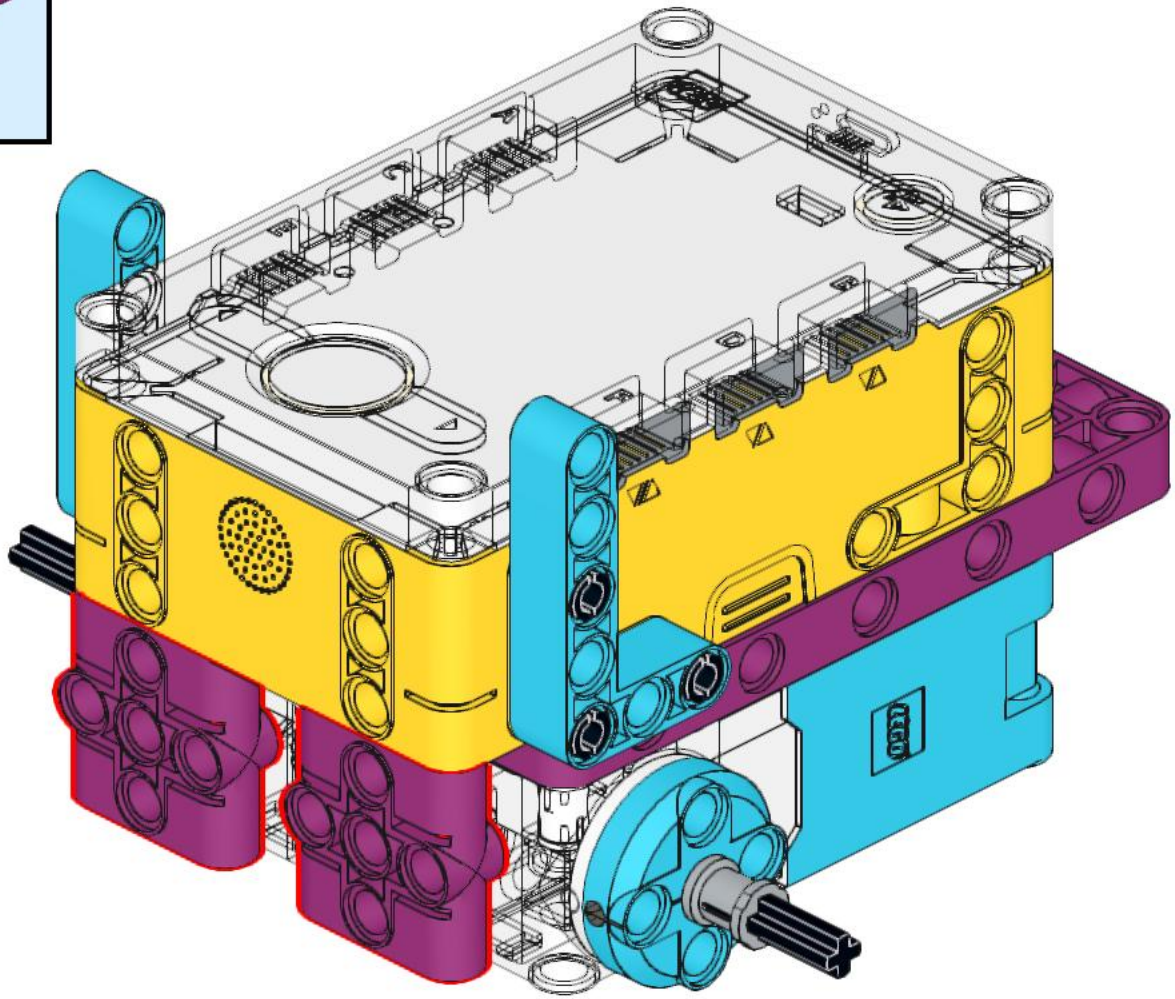

14

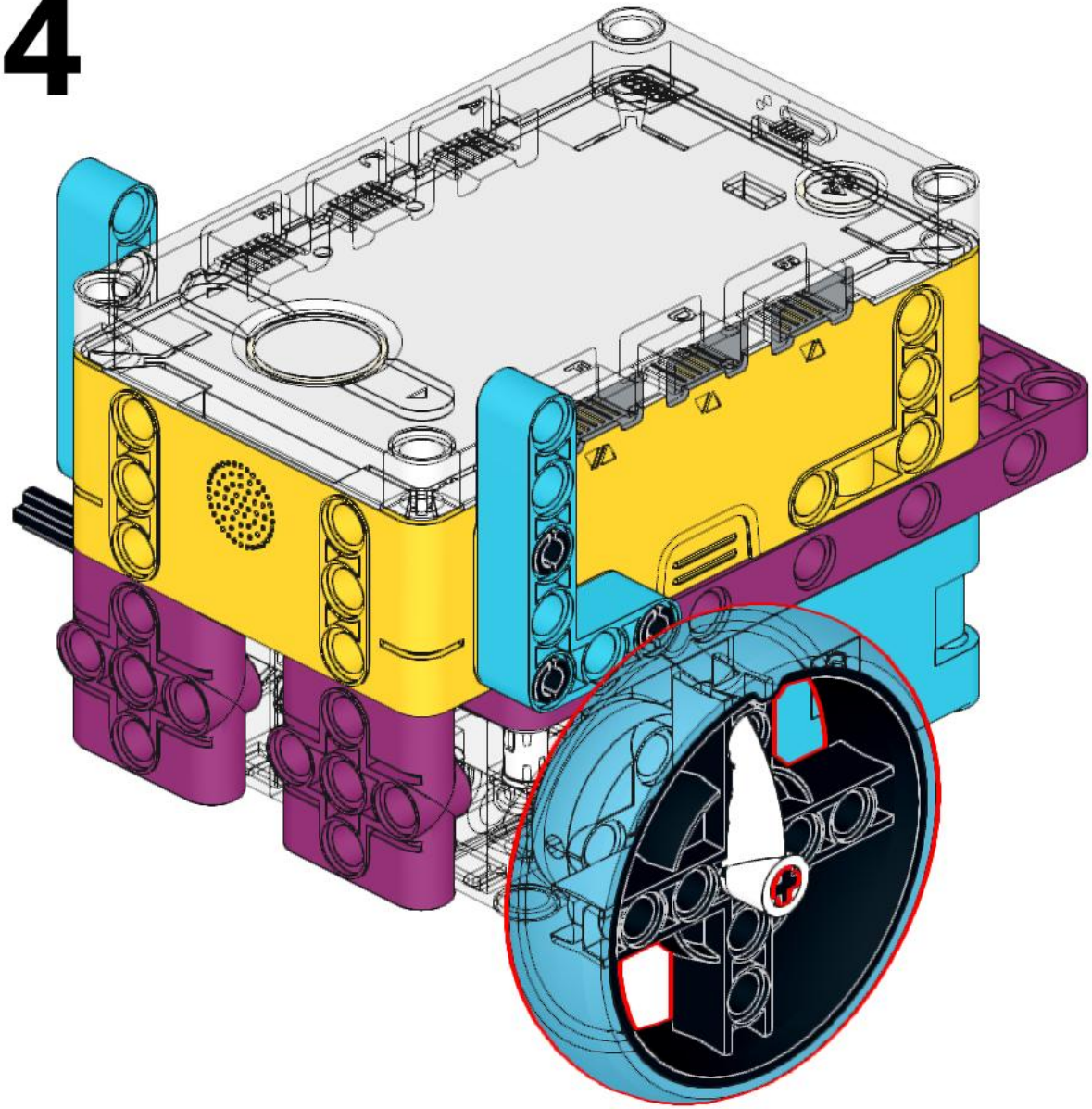

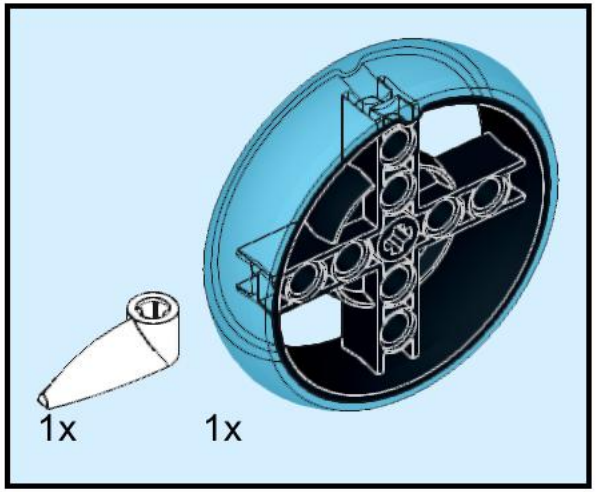

15

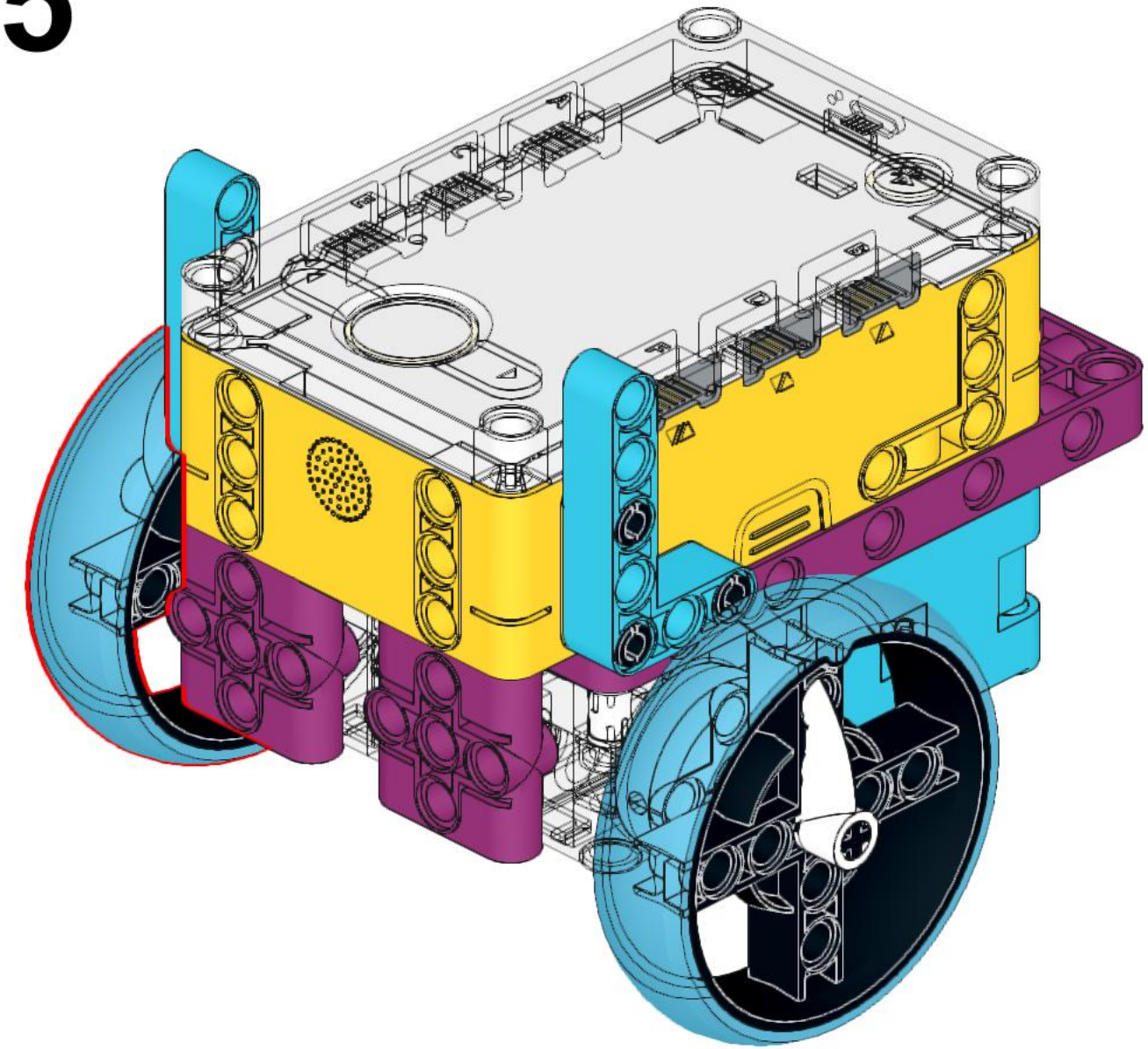

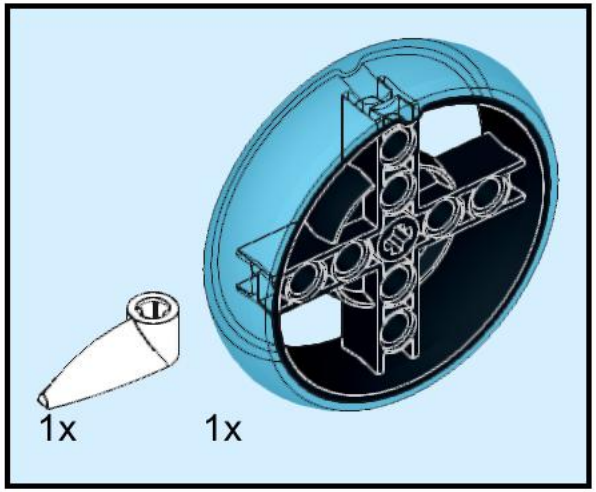

16

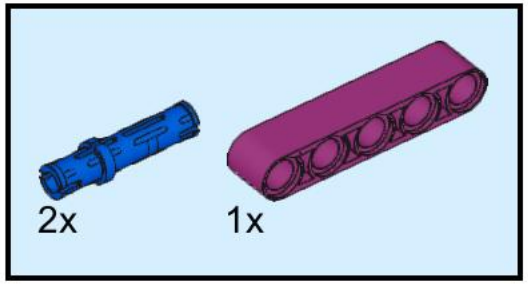

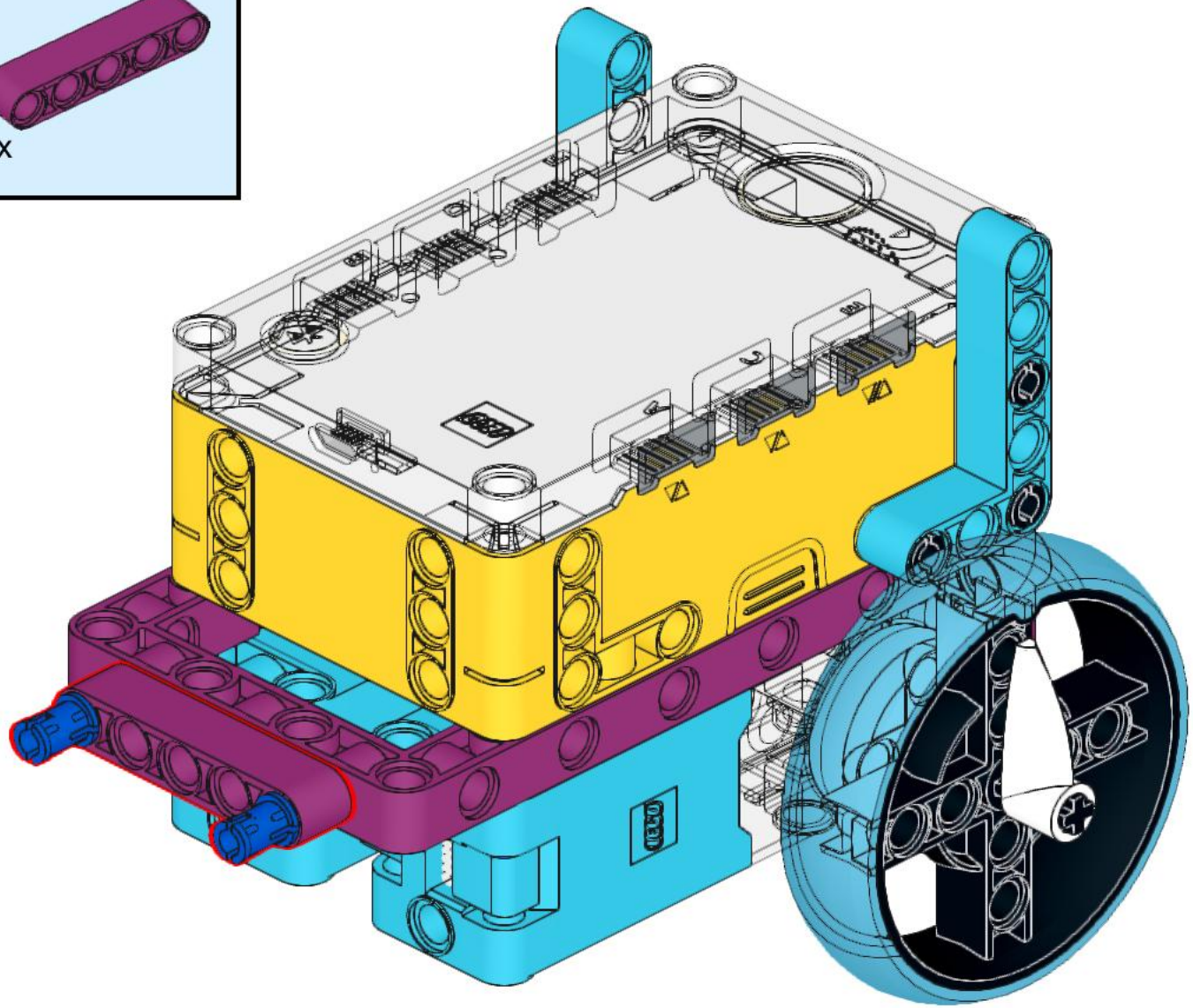

17

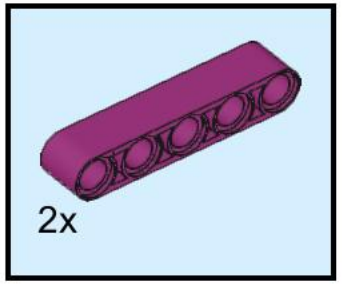

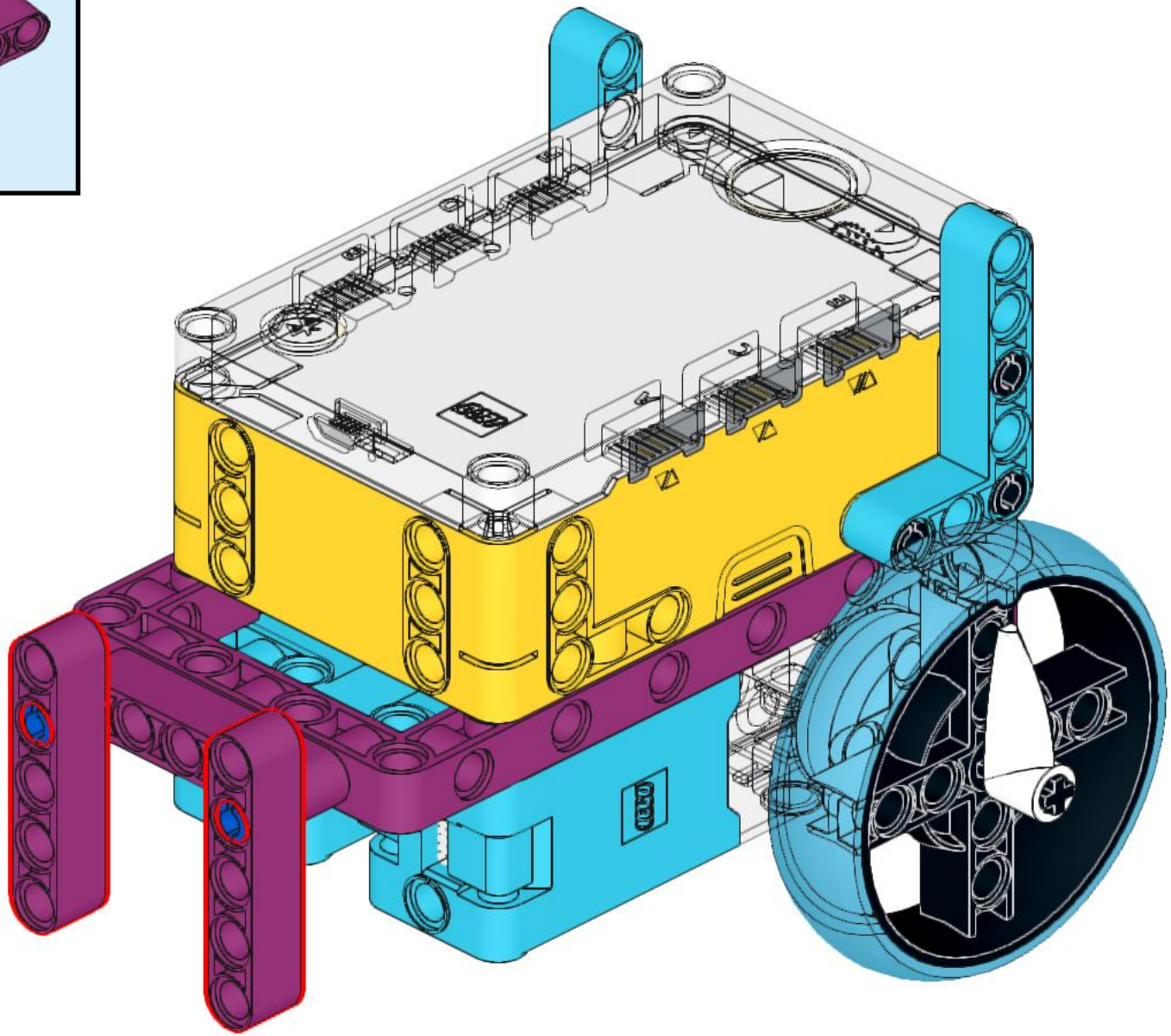

18

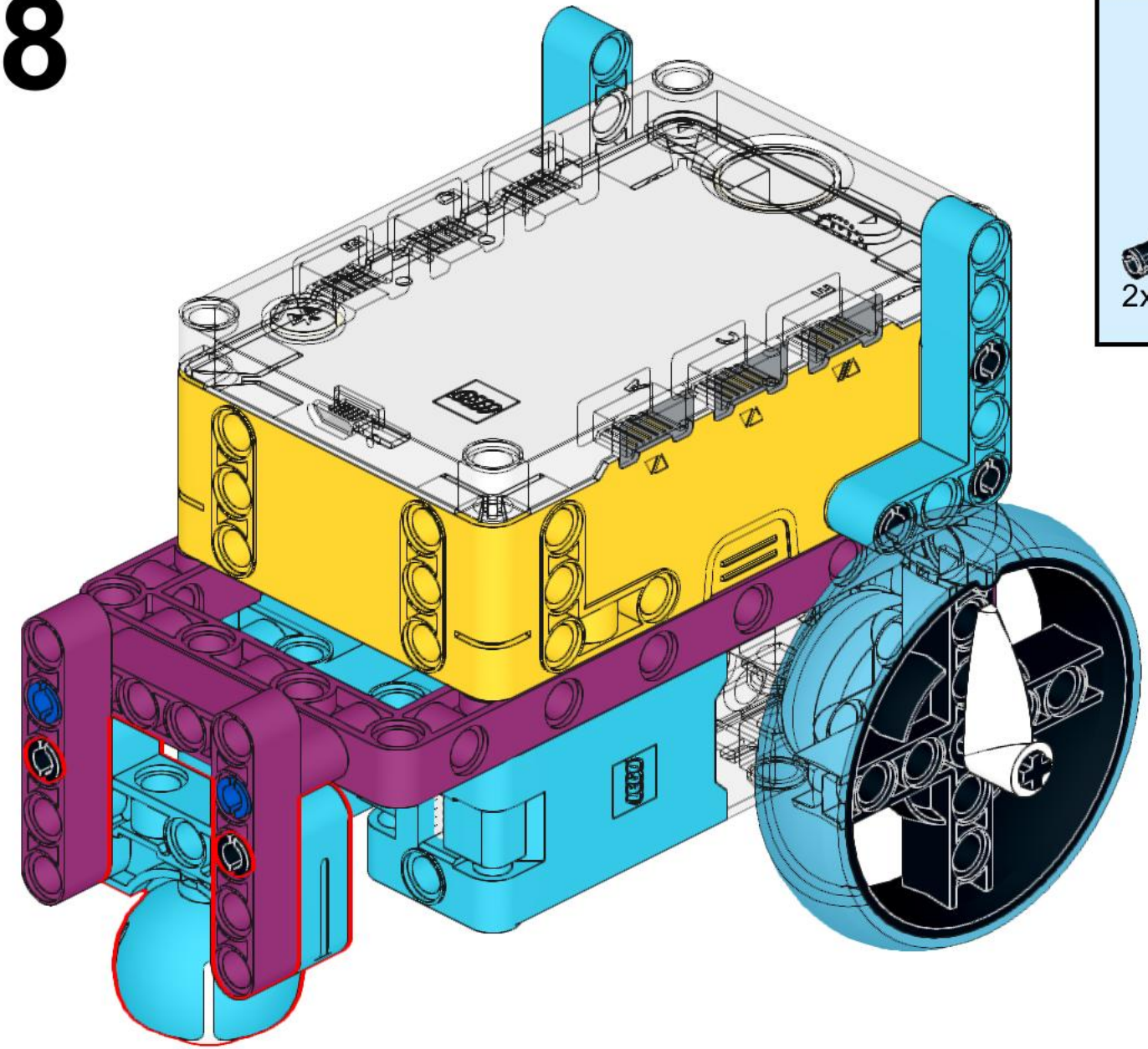

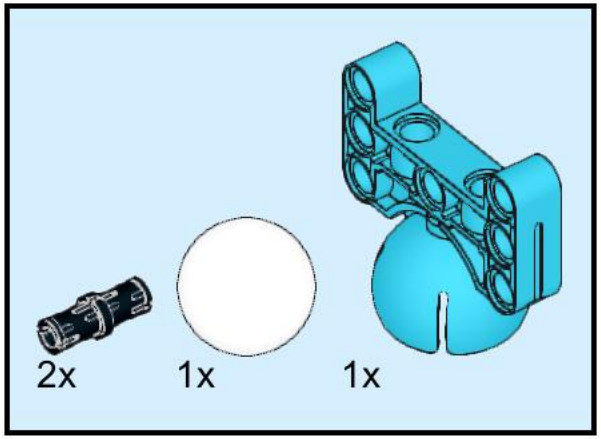

19

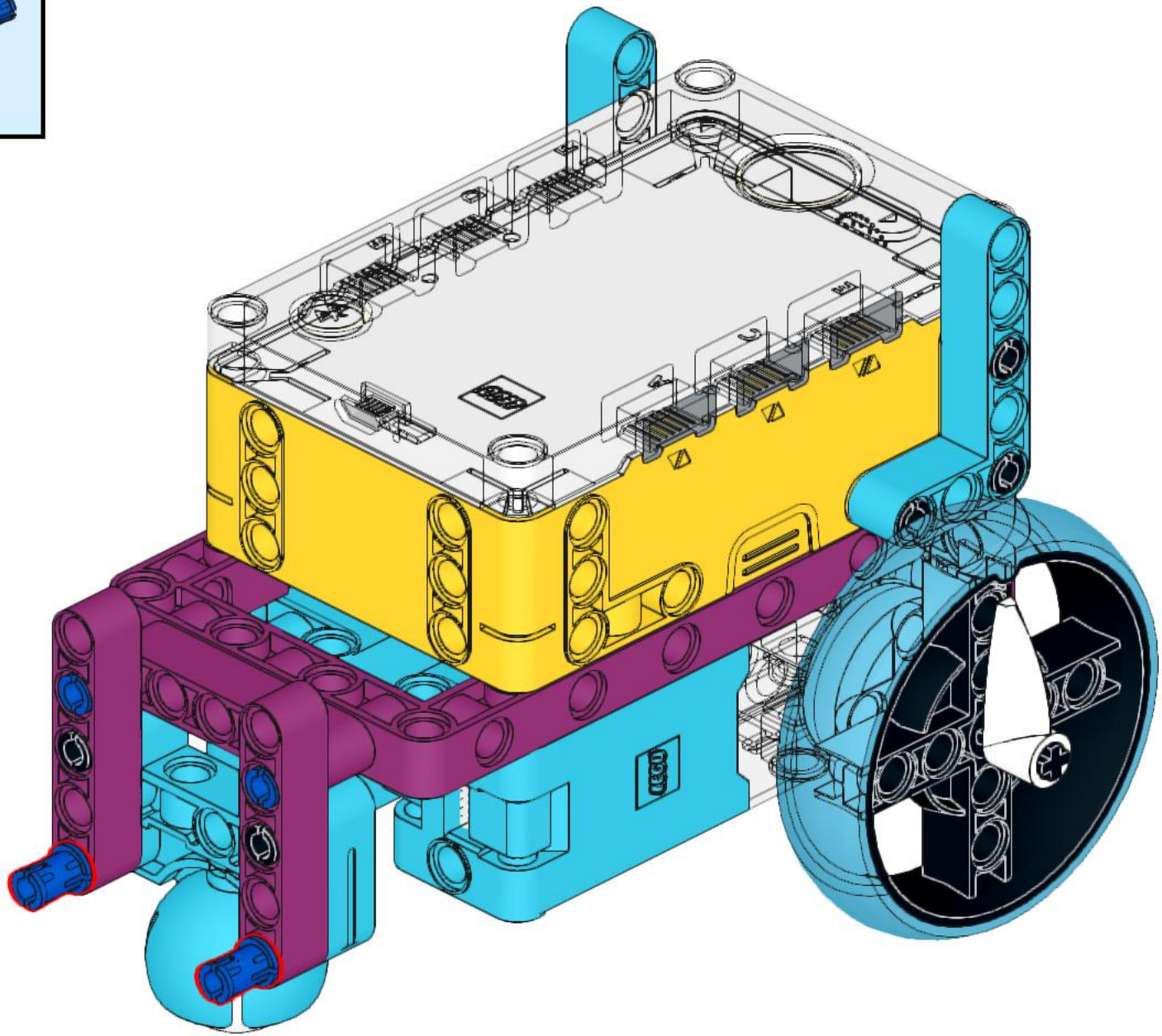

20

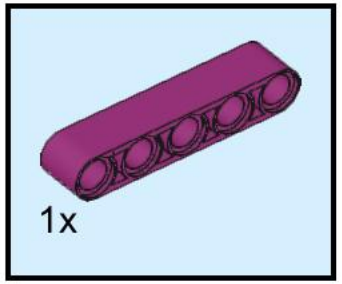

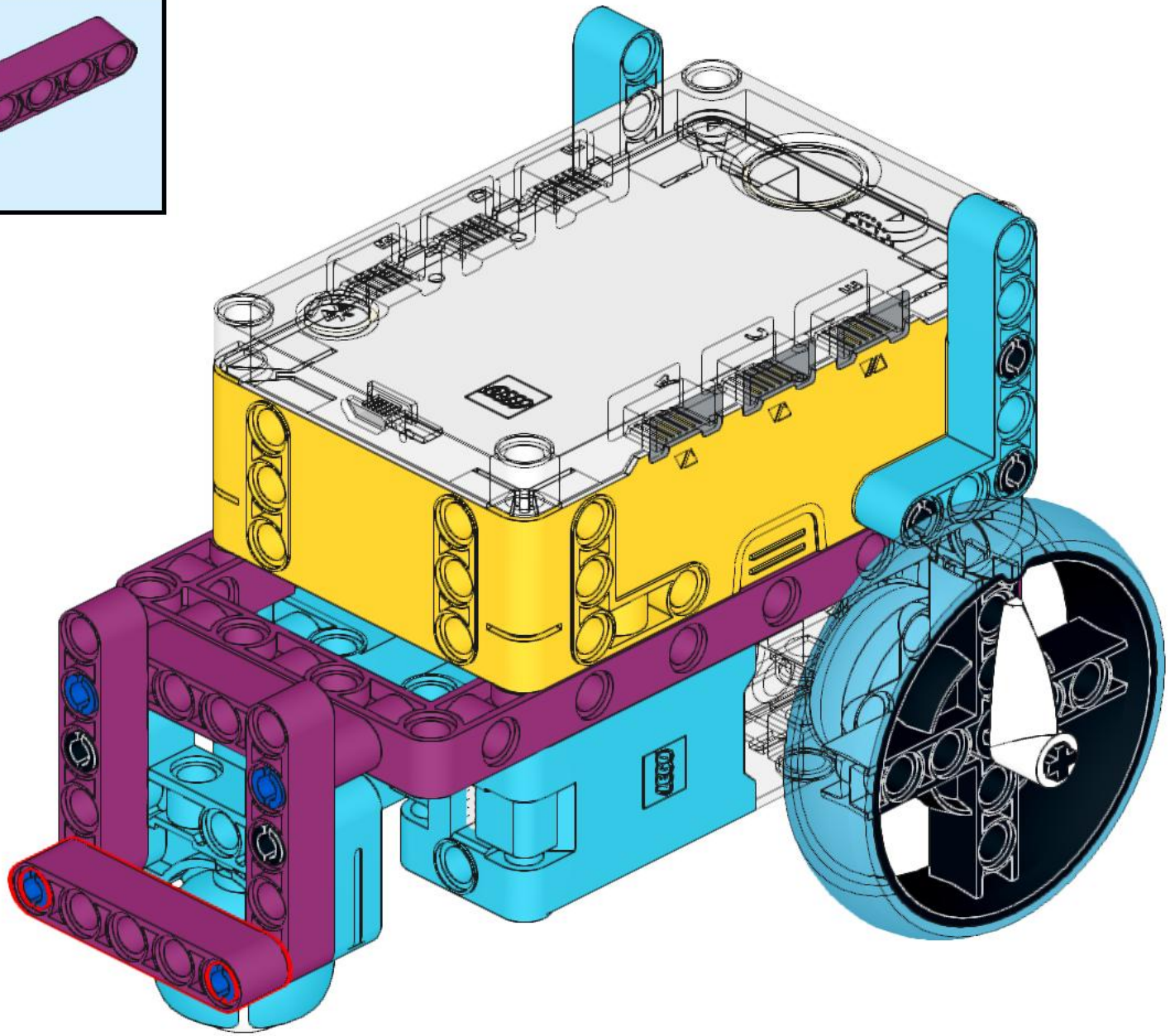

14