Rack & Pinion

1

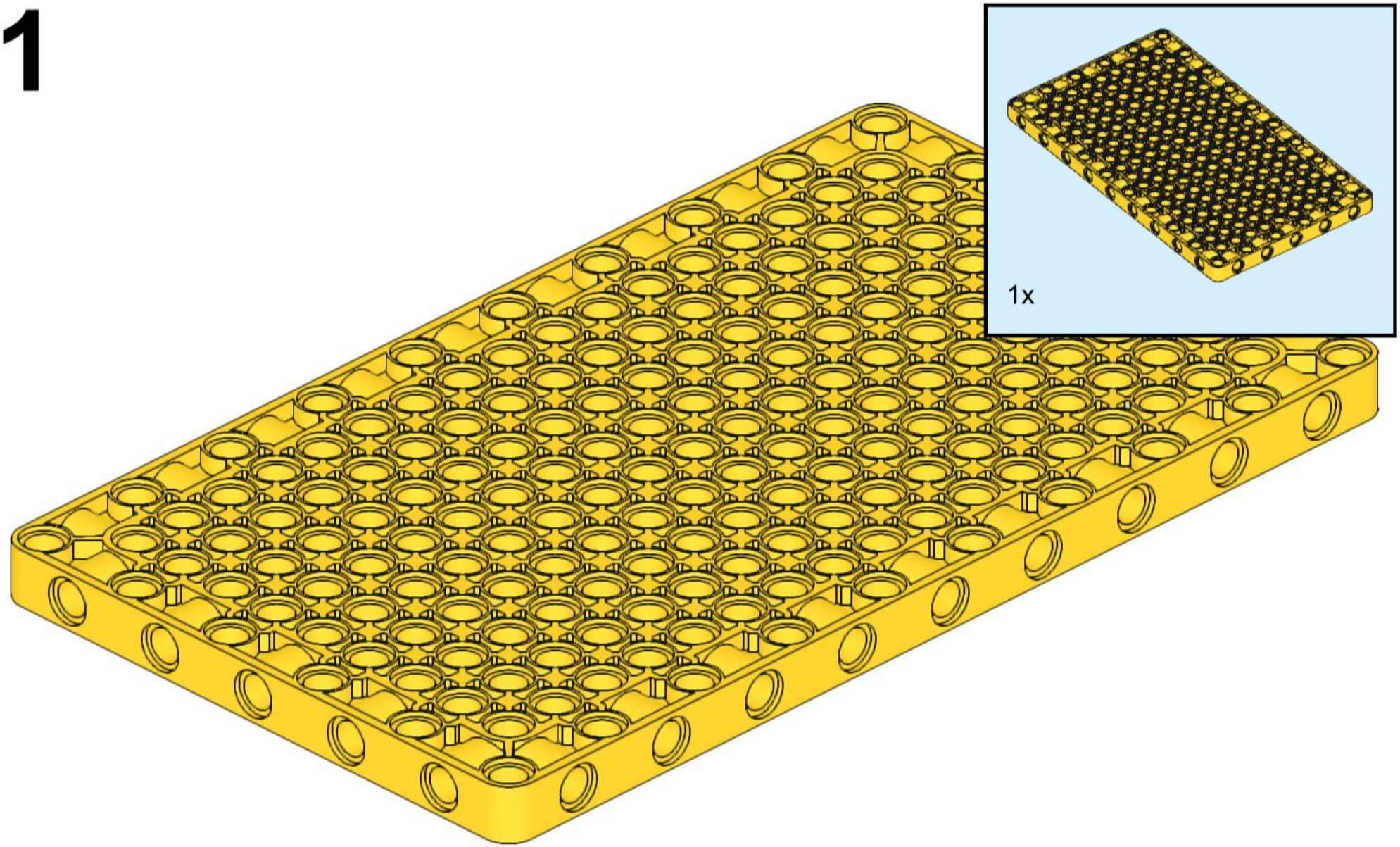

brain eating machines

2

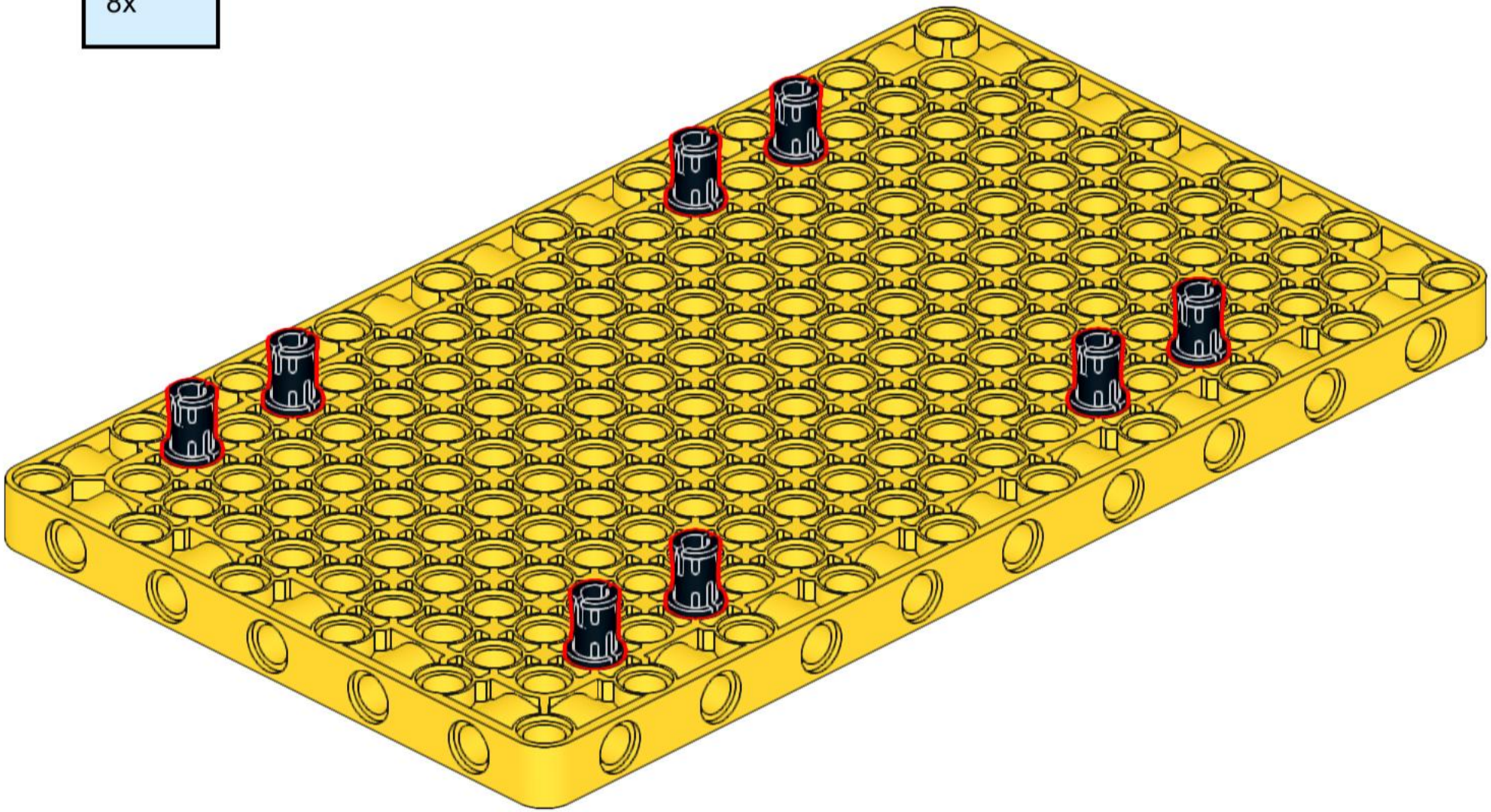

brain eating machines

3

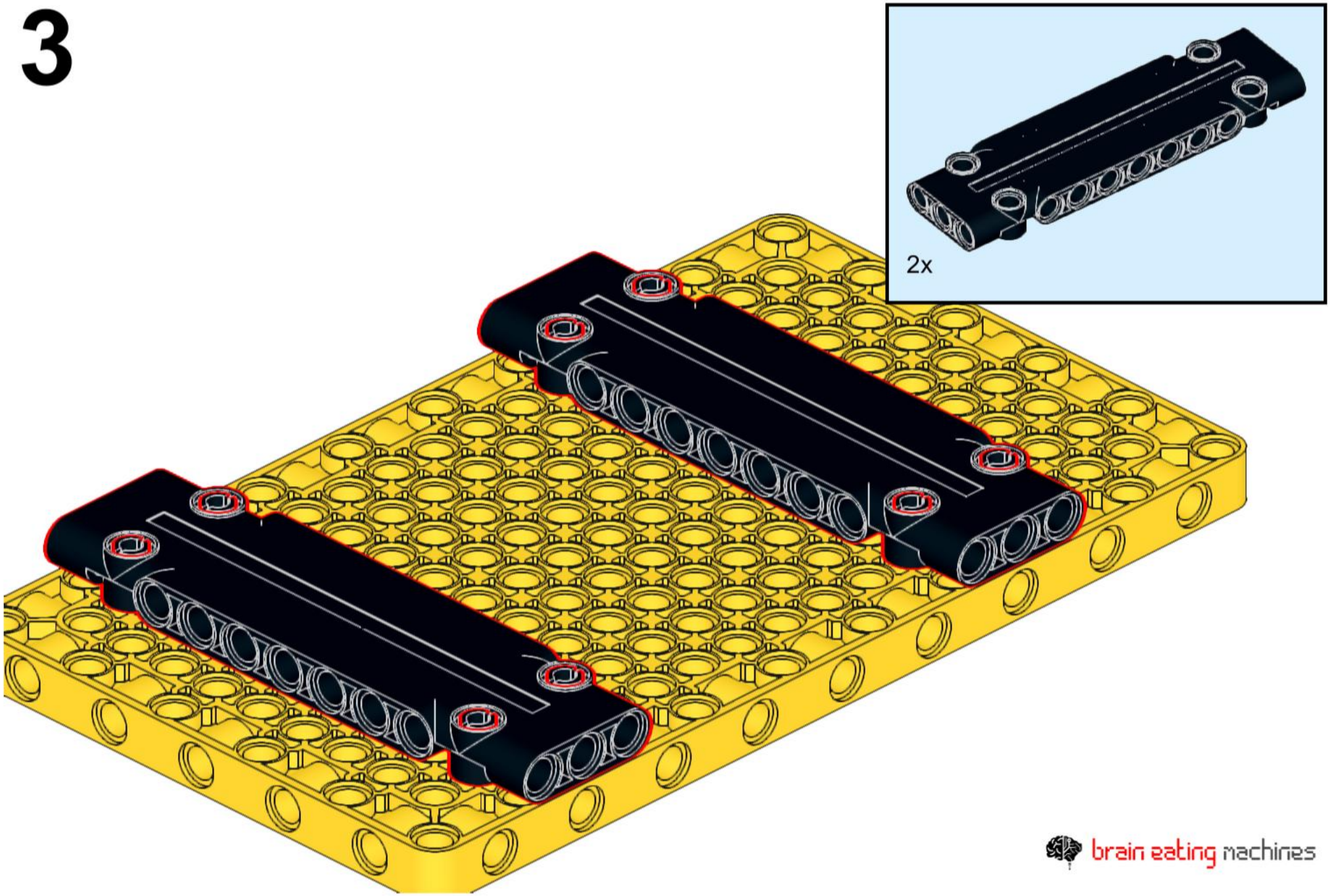

brain eating machines

4

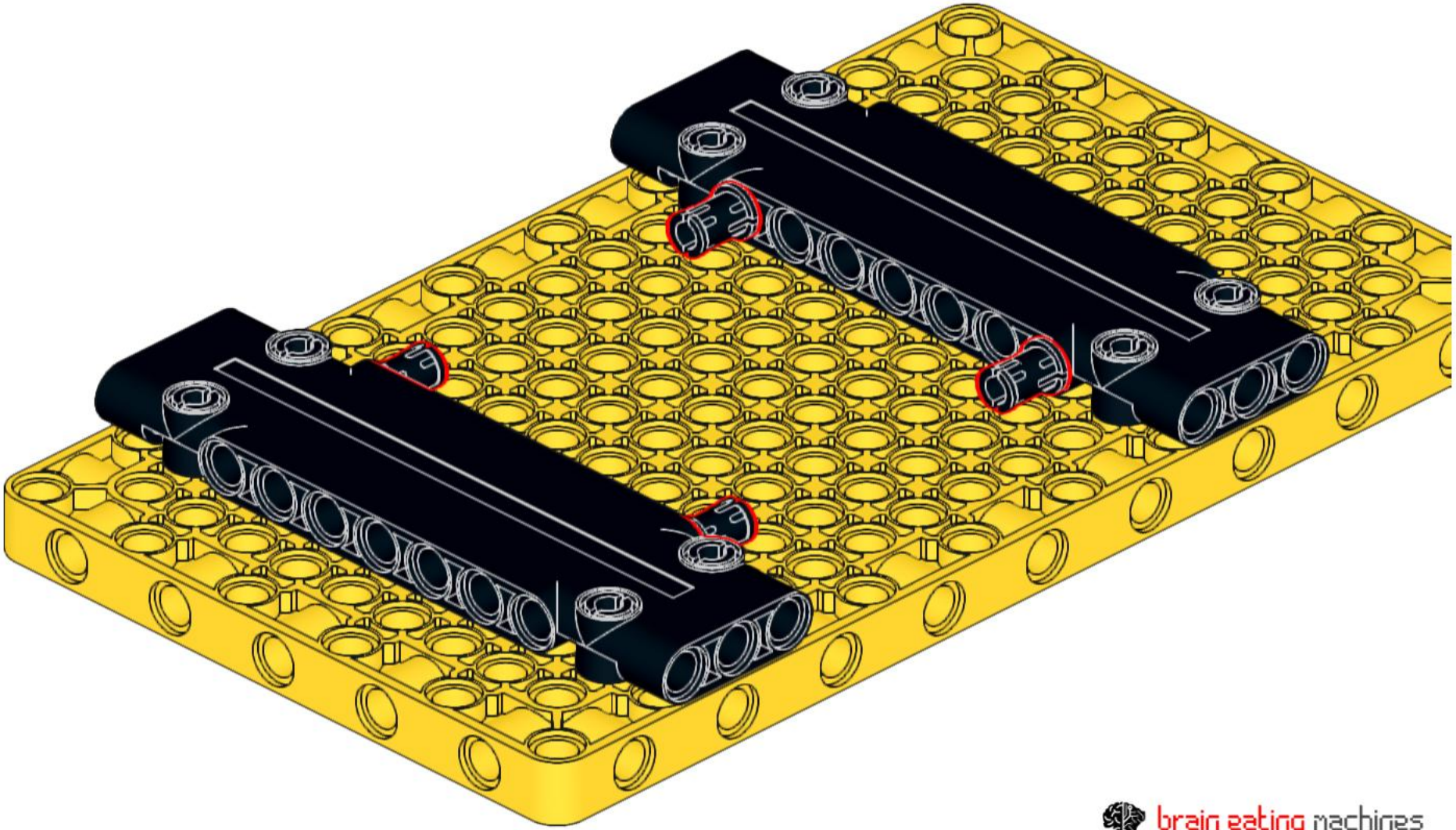

brain eating machines

5

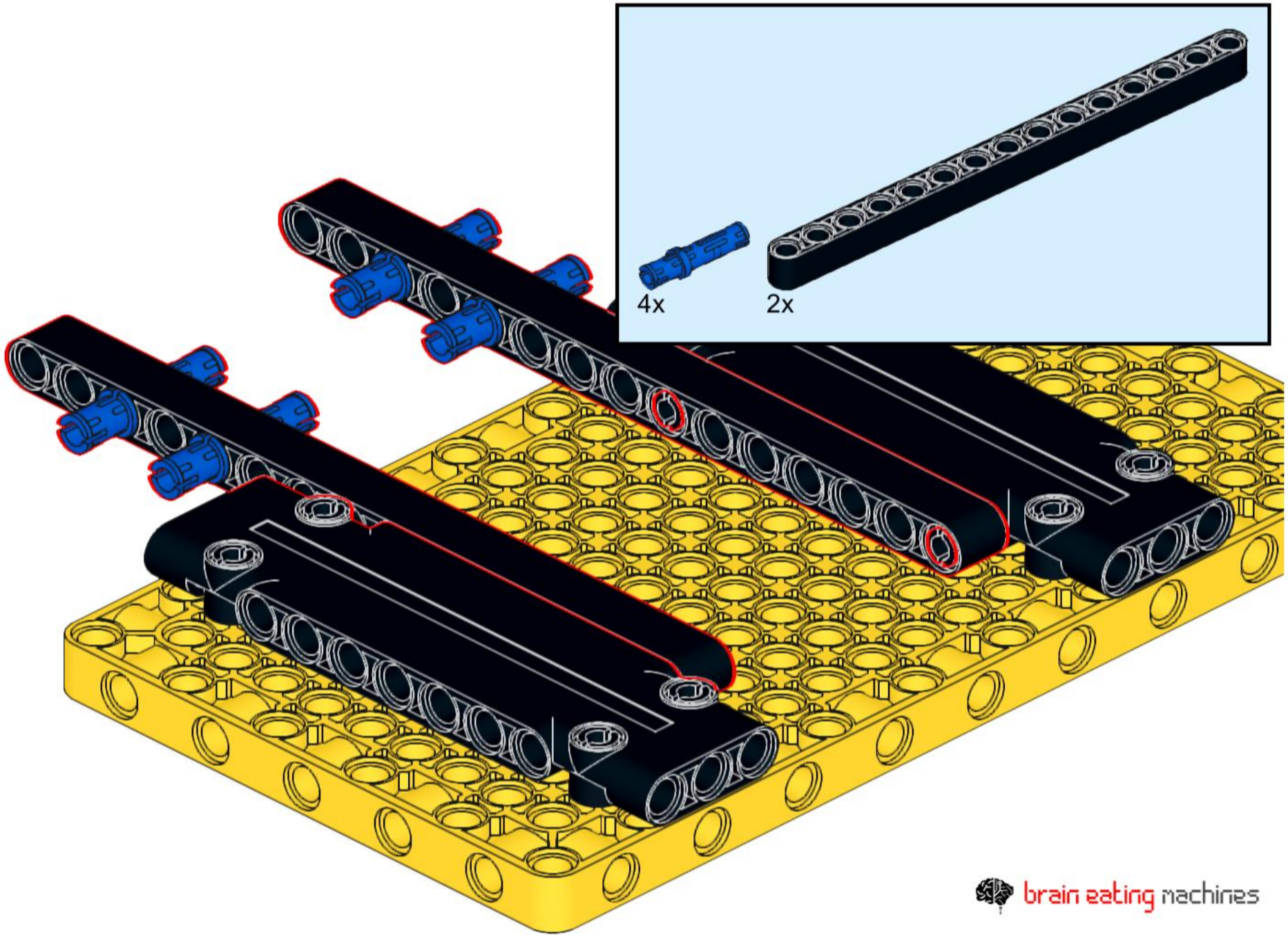

6

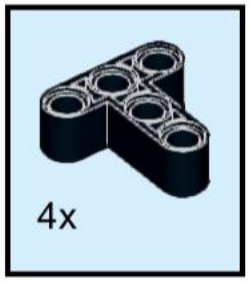

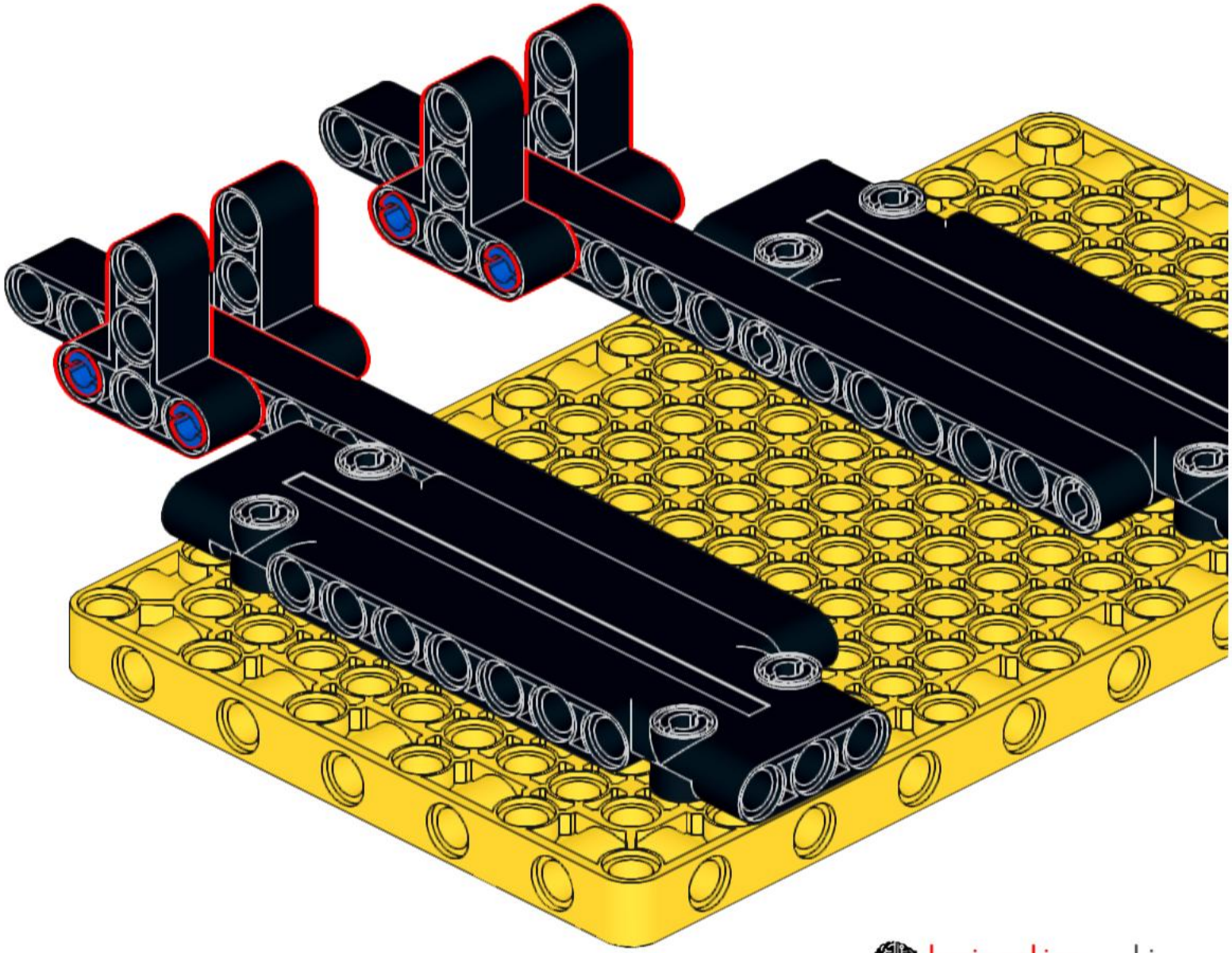

brain eating machines

7

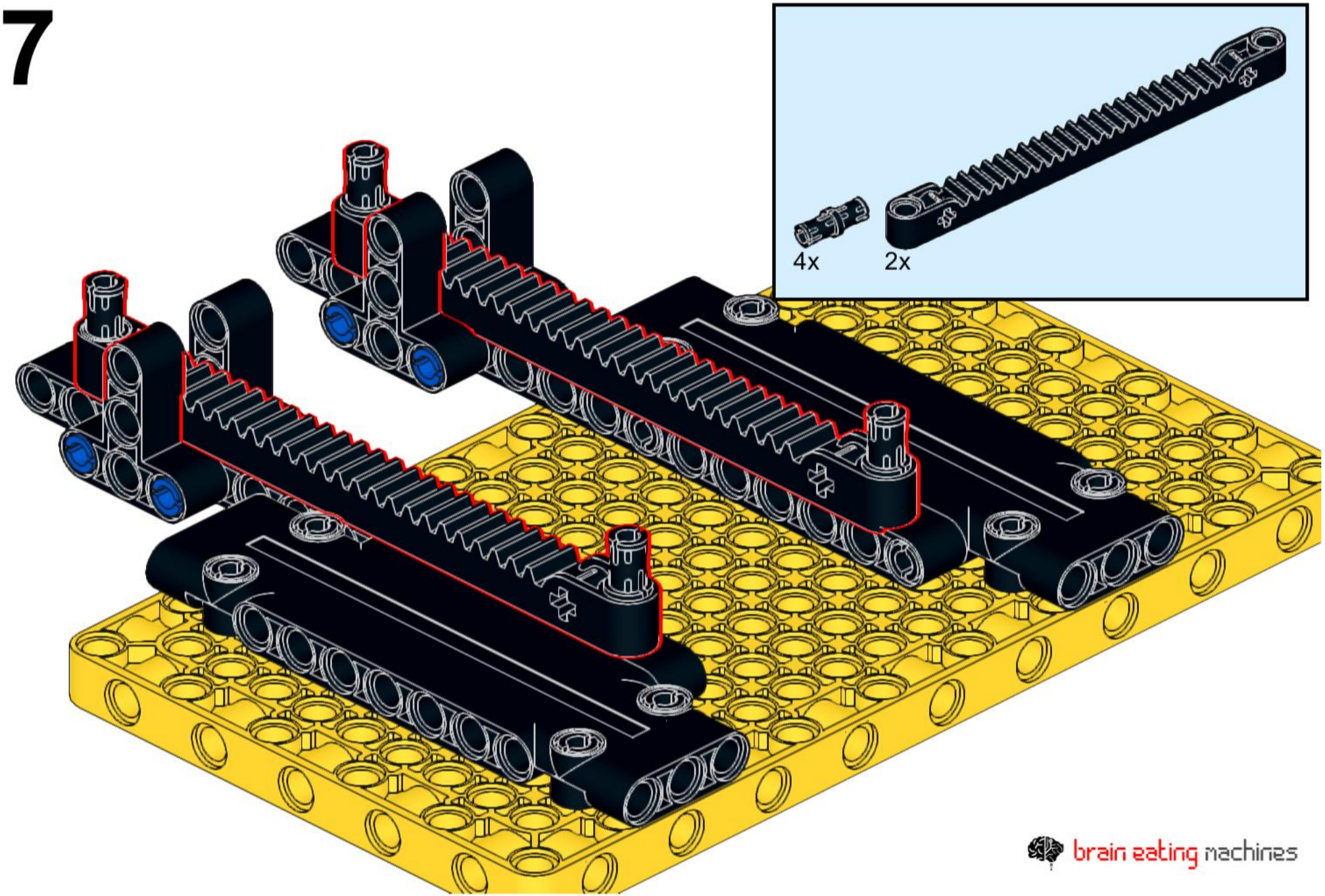

brain eating machines

8

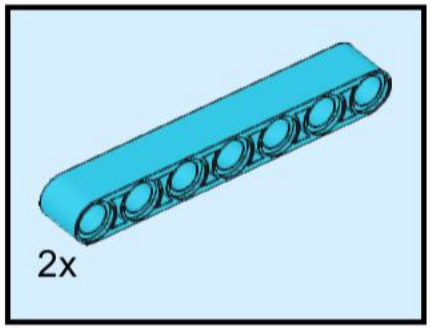

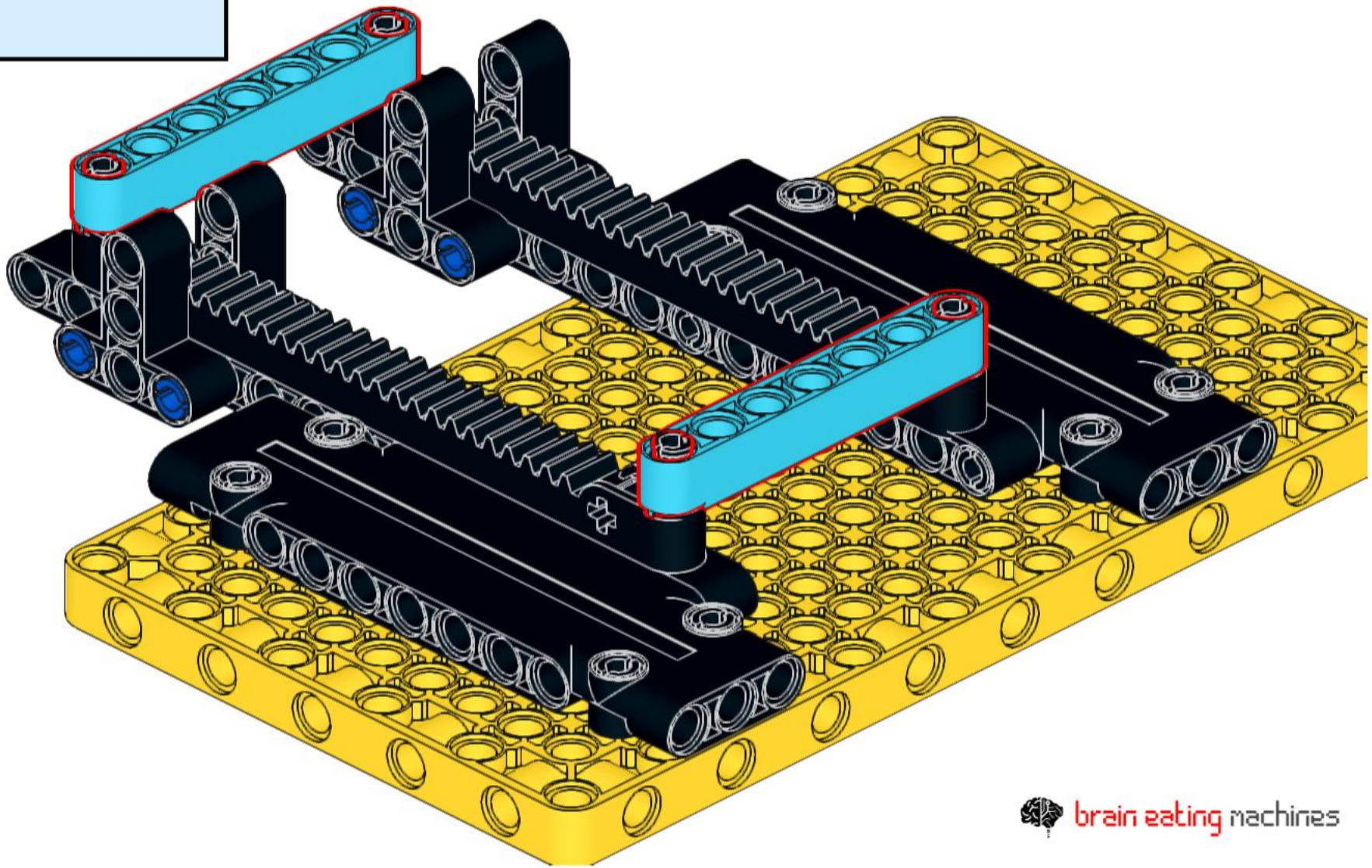

brain eating machines

9

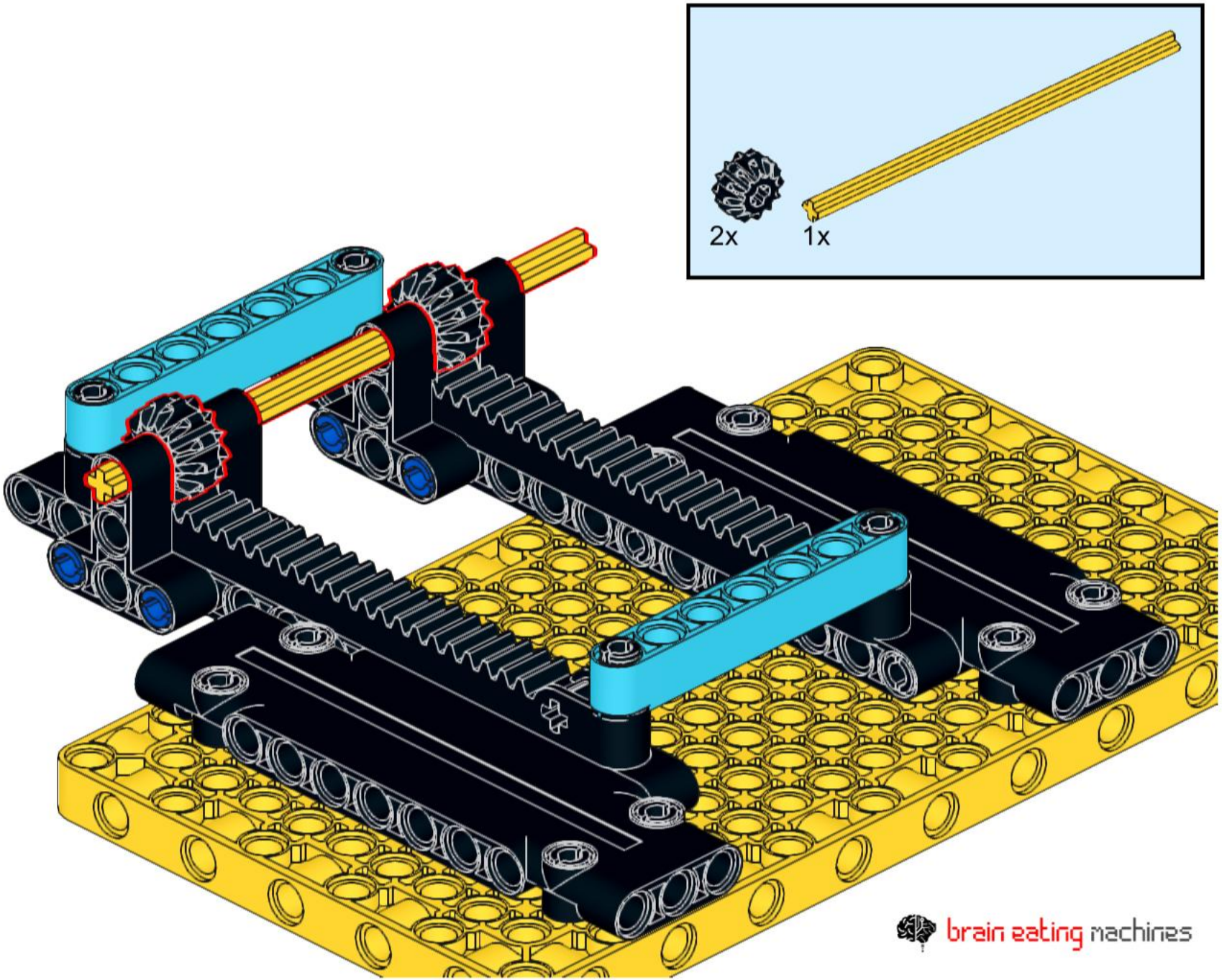

10

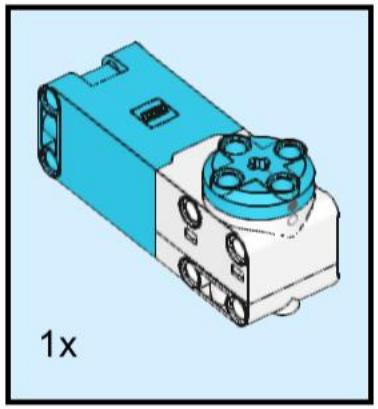

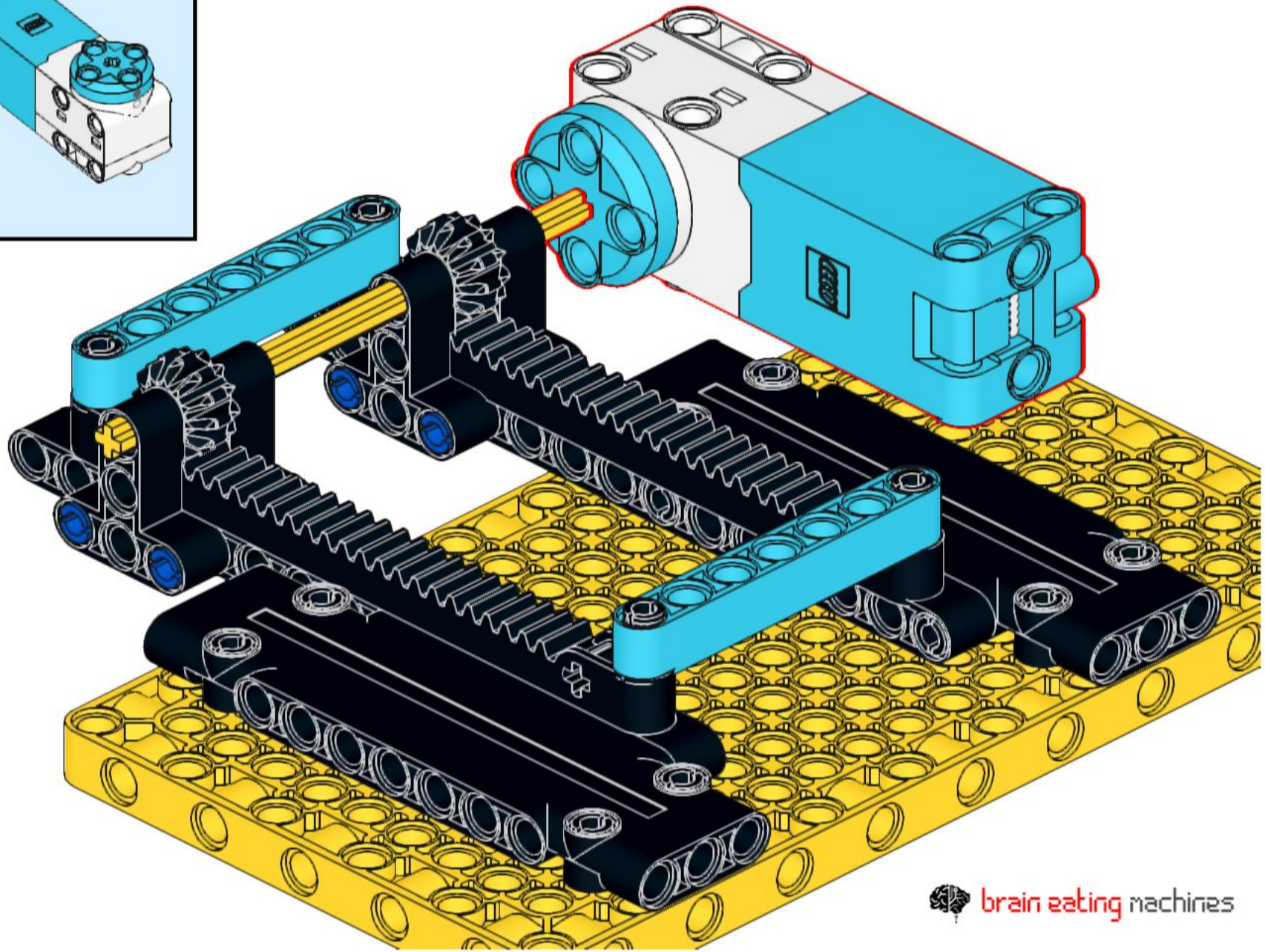

brain eating machines